Togami

# Togami's
# Magnetic Contactors and Thermal overload relays

## PAK • RSK-J/H Series

## CLK-J / H Series

ISO 9001 JQA-0913
ISO 14001 JQA-EM0915 HEAD OFFICE
Apr 2018
Catalog No. C0227e

**Togami Electric Mfg.Co.,Ltd.**

Printed in Japan

# PAK·RSK Series

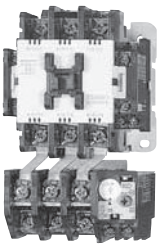
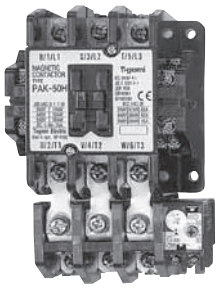

# CLK Series

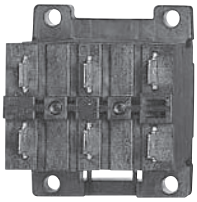

Togami magnetic starters have been regulary used throughout industries for the excellence and reliability for over a half century.

The PAK·RSK-J/H series（6AF～800AF）for general use and the CLK-J/H series（15AF～250AF）for specialized for low operation use, magnetic contactors & starters and also the TJ series thermal overload relays succeeded such a time-honored tradition are assured maximum satisfaction to customers in the world.

**PRODUCTS CONFORMING TO RoHS DIRECTIVE**

## ⚠ SAFETY PRECAUTION

FOR YOUR SAFETY, PLEASE BE SURE TO READ THE CHAPTER "HANDLING INSTRUCTIONS" IN THIS CATALOGUE AND PERTINENT HANDLING MANUALS ATTACHED TO PRODUCTS BEFORE USING.

# Table of contents


1 Overview ..... Page 1
2 General purpose contactors PAK・RSK Series ..... Page 3
- Features and options ..... Page 3
- Selection table ..... Page 5
- Manufactured models and model explanation ..... Page 7
- Selection process ..... Page 8
- Main contact ratings ..... Page 9
- Auxiliary contact ratings ..... Page 10
- Operation coil ratings ..... Page 11
- Operation electromagnet ratings ..... Page 12
- Application of thermal overload relay for motors ..... Page 14
- Performance ..... Page 15
- Electrical life ..... Page 16
- Test condition and performance indication (Reference) ..... Page 17
- Application for motor ..... Page 18
- Application for capacitive load ..... Page 23
- Application for DC load ..... Page 24
- Protection coordination ..... Page 25
- Handling instructions ..... Page 26
- Dimensions and specifications for Non-reversing model ..... Page 29
- Dimensions and specifications for Reversing model ..... Page 45
- Dimensions and specifications for Magnetic starters with slow-trip thermal overload relays ..... Page 59
- Dimensions and specifications for Mechanical latch magnetic contactors ..... Page 61
- Dimensions and specifications for Magnetic relays ..... Page 67
- Dimensions and specifications for 4 poles contactors ..... Page 71

3 Thermal overload relays T, TJ Series ..... Page 73
- Selection table ..... Page 73
- Standard and Phase-Failure protection models ..... Page 75
- Fast-Trip models ..... Page 83
- Dimensions and specifications for Standard, Phase-Failure protection and Fast-Trip models ..... Page 84

4 Options ..... Page 87
- Auxiliary contact units ..... Page 87
- No-Loss latch units ..... Page 88
- Terminal covers ..... Page 89
- Terminal protection cover ..... Page 92
- Coil surge absorption unit ..... Page 93
- Din rail mounting adapters ..... Page 94
- Spare parts ..... Page 95

5 Star-Delta starters SDH-H Series ..... Page 96
6 Economical type contactors CLK Series ..... Page 103
- Selection table ..... Page 103
- Manufactured models and model explanation ..... Page 105
- Selection ..... Page 106
- Handling instructions ..... Page 109
- Dimensions and specifications ..... Page 112

7 Compatibility ..... Page 124
- General purpose contactors PAK Series ..... Page 124
- General purpose contactors RSK Series ..... Page 125
- Economical type contactors CLK Series ..... Page 126

8 Index ..... Page 127

# Overview

1

| Series | | Page | Features | Description |
|---|---|---|---|---|
| PAK・RSK | Magnetic starters and contactors 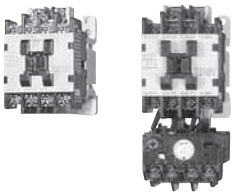 | 3 | ・Standardized Din rail mounting.<br>・Easy-read coil ratings.<br>・Fast, simple coil replacement.<br>・Improved reliability of auxiliary contact.<br>・Enhanced electrical life (AC3). | Standard model<br>Reversing model<br>Standard model with phase-failure protection thermal overload relays<br>Reversing model with phase-failure protection thermal overload relays<br>Standard model with 3-heaters thermal overload relays<br>Reversing model with 3-heaters thermal overload relays<br>Standard model with slow-trip thermal overload relays<br>Standard model with mechanical latch<br>Reversing model with mechanical latch |
| | Star-delta starters 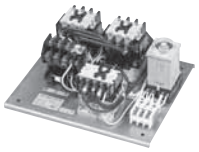 | 96 | | |
| | | | | 2 magnetic model<br>3 magnetic model |
| | Magnetic relays | 67 | | |
| | | | | Standard model |
| | Optional units 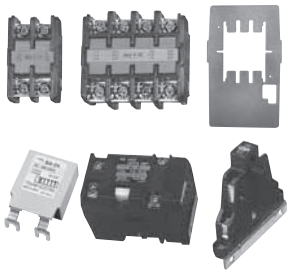 | 87 | | |
| | | | Various optional units enhance the functions of magnetic starters. | Auxiliary contact unit<br>No-loss latch unit<br>Terminal cover and terminal protection cover<br>Coil surge absorption unit<br>DIN rail mounting adapter<br>Spare coil<br>Main contact spring<br>Base for TJ-18N<br>Mechanical interlock unit set<br>Connecting bar kit |
| CLK | Low operating cycle starters and contactors 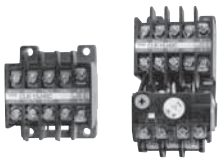 | 105 | | |
| | | | ・Economical and downsized.<br>・Best for low operating cycle. | Magnetic Contactors<br>Magnetic Starters with 2-heaters thermal overload relays<br>Magnetic Starters with 3 heaters thermal overload relays<br>Magnetic Starters with phase-failure protection thermal overload relays |
| T, TJ | Thermal overload relays 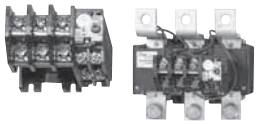 | 73 | | |
| | | | ・Trip indicator.<br>・Automatic compensation for ambient temperature.<br>・One-touch selection of manual or automatic reset. | Standard model<br>Phase-failure protection model<br>3-heaters model |

# Overview



| Model | | | | | | | | | | | | | | | | | | | | | | |
|---|---|---|---|---|---|---|---|---|---|---|---|---|---|---|---|---|---|---|---|---|---|---|
| | Frame | 6JC | 11J | 12J | 20J | 21J | 26J | 35J | 50J | 50H | 65H | 80H | 95H | 100H | 125H | 150H | 220H | 270H | 300J | 400J | 600J | 800J |
| | Rated capacity AC-3 at AC220V | 2.2 | 3.7 | 4 | 7.5 | 7.5 | 10 | 15 | 18.5 | 18.5 | 22 | 25 | 27 | 37 | 45 | 60 | 80 | 90 | 90 | 115 | 160 | (AC-2) 200 |
| | Rated capacity AC-3 at AC440V | 4 | 4.5 | 5.5 | 11 | 11 | 20 | 26 | 30 | 30 | 37 | 45 | 55 | 55 | 60 | 75 | 90 | 132 | 150 | 200 | 300 | (AC-2) 400 |
| PAK-□J(C) □JM(C) □JB(C) □H □HT(C) □HM(C) □HB | | ▬ | | | | | | | | | | | | | | | | | | | | |
| RSK-□J □JT(C) □JM(C) □JB □H □HT(C) □HM(C) □HB | | | ▬ | ▬ | ▬ | ▬ | ▬ | ▬ | ▬ | ▬ | ▬ | ▬ | ▬ | ▬ | ▬ | ▬ | ▬ | ▬ | ▬ | ▬ | | |
| PAK-□JGT(C) □JGM(C) □HGT(C) □HGM(C) | | ▬ | ▬ | ▬ | ▬ | ▬ | ▬ | ▬ | ▬ | ▬ | ▬ | ▬ | ▬ | ▬ | ▬ | ▬ | ▬ | ▬ | ▬ | ▬ | ▬ | |
| RSK-□JGT(C) □JGM(C) □HGT(C) □HGM(C) | | | ▬ | ▬ | ▬ | ▬ | ▬ | ▬ | ▬ | ▬ | ▬ | ▬ | ▬ | ▬ | ▬ | ▬ | ▬ | ▬ | | ▬ | | |
| PAK-□JT □JM □HT □HM-3(C) | | ▬ | ▬ | ▬ | ▬ | ▬ | ▬ | ▬ | ▬ | ▬ | ▬ | ▬ | ▬ | ▬ | ▬ | ▬ | ▬ | ▬ | | | | |
| RSK-□JT □JM □HT □HM-3(C) | | | ▬ | ▬ | ▬ | ▬ | ▬ | ▬ | ▬ | ▬ | ▬ | ▬ | ▬ | ▬ | ▬ | ▬ | ▬ | ▬ | | | | |
| PAK-□JT □JGT □HT □HGT-SL2(C) | | | ▬ | ▬ | ▬ | ▬ | ▬ | ▬ | ▬ | ▬ | ▬ | ▬ | ▬ | ▬ | ▬ | ▬ | | | | | | |
| PAK-□JL | | | | | | ▬ | | ▬ | | | | ▬ | | | | ▬ | ▬ | | | | | |
| RSK-□JL | | | | | | ▬ | | ▬ | | | | ▬ | | | | ▬ | ▬ | | | | | |

| | | | | | | | | | | | | | | | | | | | | | | |
|---|---|---|---|---|---|---|---|---|---|---|---|---|---|---|---|---|---|---|---|---|---|---|
| | Frame | 25HTC | 35HTC | 50HTC | 80HTC | 100HTC | 150HTC | 220HTC | 300HTC | | | | | | | | | | | | | |
| | Rated capacity AC-3 at AC220V | 5.5 | 7.5 | 11 | 19 | 26 | 40 | 55 | 75 | | | | | | | | | | | | | |
| | Rated capacity AC-3 at AC440V | 5.5 | 11 | 19 | 26 | 37 | 55 | 90 | 150 | | | | | | | | | | | | | |
| SDH-□ | | ▬ | ▬ | ▬ | ▬ | ▬ | ▬ | ▬ | ▬ | | | | | | | | | | | | | |
| SDH3-□ | | ▬ | ▬ | ▬ | ▬ | ▬ | ▬ | ▬ | ▬ | | | | | | | | | | | | | |

| | | | | | | | | | | | | | | | | | | | | | | |
|---|---|---|---|---|---|---|---|---|---|---|---|---|---|---|---|---|---|---|---|---|---|---|
| | Contact configuration | 4a | 3a1b | 2a2b | 6a | 5a1b | 4a2b | 3a3b | 8a | 7a1b | 6a2b | 5a3b | 4a4b | | | | | | | | | |
| PAK-8JS□ | | ▬ | ▬ | ▬ | ▬ | ▬ | ▬ | ▬ | ▬ | ▬ | ▬ | ▬ | ▬ | | | | | | | | | |

| | Overview |
|---|---|
| HAU-□ | For auxiliary contacts. |
| HL-B | For no-loss latch operation. |
| TC-□, C-□ | For preventing terminal exposure. |
| SA-□ | For absorbing surge. |
| D-5A | For DIN rail mounting. |
| SPARE COIL for □ | For replacement coil. |
| MAIN CONTACT SPRING for □ | For replacement from exhausted contacts. |
| BASE FOR TJ-18N for □ | For individual use adapter of thermal overload relay (TJ-18N). |
| ML-□ | For mechanical interlock. |
| CONNECTING BAR KIT for □ | For Reversing contactors. |

| | | | | | | | | | | | | | | | | | | | | | | |
|---|---|---|---|---|---|---|---|---|---|---|---|---|---|---|---|---|---|---|---|---|---|---|
| | Frame | 15JC | 20J | 25J3 | 26J | 28J | 35J3 | 35J | 40J | 50J | 65J | 65H | 80H | 100H | 125H | 150H | 200H | 250H | | | | |
| | Rated capacity AC-3 at AC220V | 3 | 4 | 5.5 | 5.5 | 7.5 | 7.5 | 7.5 | 7.5 | 11 | 15 | 15 | 19 | 22 | 30 | 37 | 50 | 68 | | | | |
| | Rated capacity AC-3 at AC440V | 4.5 | 5.5 | 7.5 | 7.5 | 11 | 11 | 11 | 15 | 19 | 30 | 30 | 37 | 40 | 55 | 60 | 80 | 90 | | | | |
| CLK-□ | | ▬ | ▬ | ▬ | ▬ | ▬ | ▬ | ▬ | ▬ | ▬ | ▬ | ▬ | ▬ | ▬ | ▬ | ▬ | ▬ | ▬ | | | | |
| CLK-□T(C) | | ▬ | ▬ | ▬ | ▬ | ▬ | ▬ | ▬ | ▬ | ▬ | ▬ | ▬ | ▬ | ▬ | ▬ | ▬ | ▬ | ▬ | | | | |
| CLK-□GT(C) | | ▬ | ▬ | ▬ | ▬ | ▬ | ▬ | ▬ | ▬ | ▬ | ▬ | ▬ | ▬ | ▬ | ▬ | ▬ | ▬ | ▬ | | | | |
| CLK-□T-3(C) | | ▬ | ▬ | ▬ | ▬ | ▬ | ▬ | ▬ | ▬ | ▬ | ▬ | ▬ | ▬ | ▬ | ▬ | ▬ | ▬ | ▬ | | | | |

| | | | | | | | | | | | | |
|---|---|---|---|---|---|---|---|---|---|---|---|---|
| | Frame | 18JA | 18 | 18N | 35 | 50 | 125 | 220 | 400N | 400 | 600 | |
| | Rated current | 0.2 ~ 15 | 0.2 ~ 26 | 0.2 ~ 26 | 0.2 ~ 65 | 12 ~ 100 | 34 ~ 230 | 65 ~ 360 | 170 ~ 600 | 110 ~ 440 [110 ~ 450] ※ | 110 ~ 600 | ※Rated current in parentheses indicates for GT-400 model. |
| T(J)-□ | | ▬ | ▬ | ▬ | ▬ | ▬ | ▬ | ▬ | ▬ | ▬ | ▬ | |
| GT(J)-□ | | ▬ | ▬ | ▬ | ▬ | ▬ | ▬ | ▬ | ▬ | ▬ | ▬ | |
| TJ-□-3 | | ▬ | ▬ | ▬ | ▬ | ▬ | ▬ | ▬ | ▬ | | | |

2

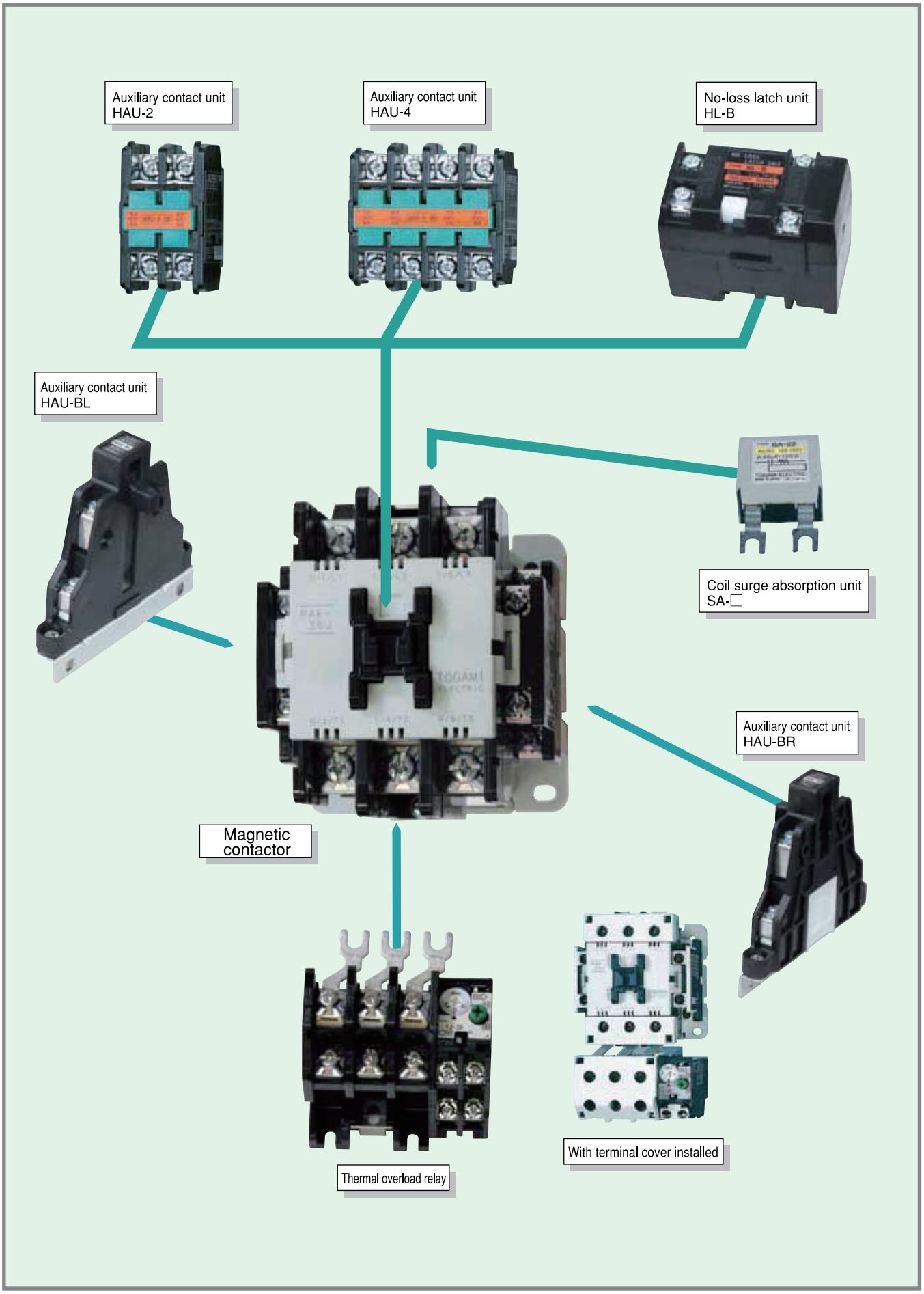
Auxiliary contact unit
HAU-2
Auxiliary contact unit
HAU-4
No-loss latch unit
HL-B
Auxiliary contact unit
HAU-BL
Coil surge absorption unit
SA-□
Auxiliary contact unit
HAU-BR
Magnetic
contactor
Thermal overload relay
With terminal cover installed

# Features and options

## Standardized rail mounting

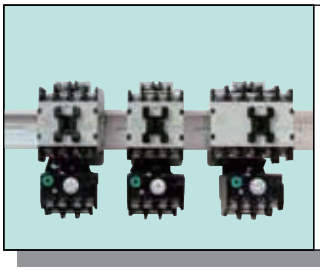

One-touch mounting on 35mm rails, complying with IEC and DIN standards.

(6JC~50J,TJ-18N)

## Easy-read coil ratings

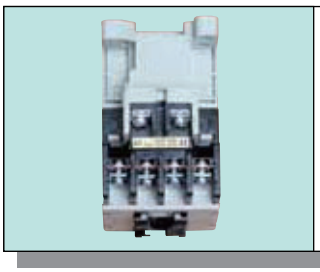

Coil ratings can be checked easily even after installation.

(6JC~50J)

## Fast, simple coil replacement

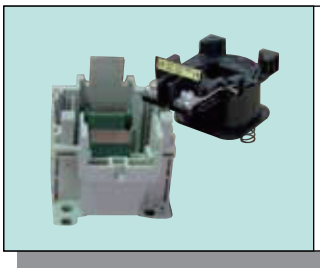

Screwless construction and cassette-type coils make swapping easier than ever.

(11J~21J)

## Simple contact inspection and maintenance

Pop open the cover for simple contact inspection.

(11J~800J)

## Improved reliability of auxiliary contact

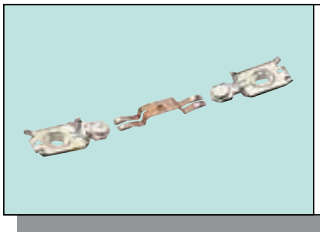

Can cope through DC24V10mA by the adoption of twin contact

(6JC~12J,21J~800J)

## Electrical life extension (AC-3)

Realized longer life of 1 million operations
(11J~35J,50H~220H)

## Conforming to national standards

CCC, CE, NK UL
RoHS Directive

## Output contact of thermal overload relay is 1NO1NC

Output contact of 1NO1NC is electrically insulated each other.

(TJ-18~T-600)

## OPTIONS

### Auxiliary contact unit (head on)

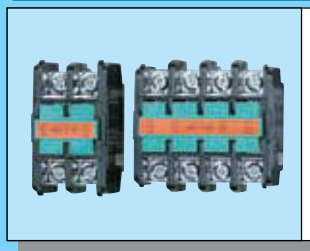

Twin-contact design auxiliary contact units can be snapped on and off with one-touch.
(11J~95H)

### Auxiliary contact units (side on)

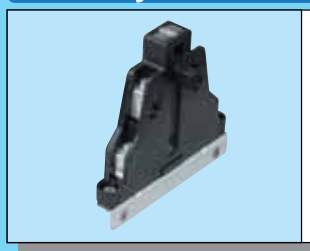

Quick mounting of twin-contact design auxiliary contact units.

(100H~270H)

### Terminal cover

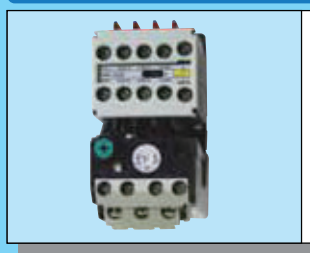

Prevents terminal exposure, improves safety (compliant with VDE0106 Teil100).
(6JC~50J)

### Terminal protection cover

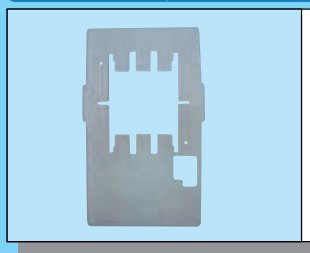

Prevents terminal exposure, improves safety.

(50H~800J)

### Coil surge absorption unit

In order to protect the electronic circuit the serge voltage generated from a coil is suppressed.
(11J~50J)
PAK-50H~800J incorporate the Surge absorption function.

# Selection table



| Series | | | | J Series | | | | | | | |
|---|---|---|---|---|---|---|---|---|---|---|---|
| Frame | | | | 6JC | 11J | 12J | 20J | 21J | 26J | 35J | 50J |
| Model type | Magnetic contactor (open type) | | Non-reversing | PAK-6JC | PAK-11J | PAK-12J | PAK-20J | PAK-21J | PAK-26J | PAK-35J | PAK-50J |
| | | | Reversing | – | RSK-11J | RSK-12J⑬ | RSK-20J⑬ | RSK-21J⑬ | RSK-26J⑬ | RSK-35J⑬ | RSK-50J⑬ |
| | Magnetic starter, standard type (With 2-heaters thermal overload relay) | Open type | Non reversing | PAK-6JTC | PAK-11JTC | PAK-12JTC | PAK-20JTC | PAK-21JTC | PAK-26JTC | PAK-35JTC | PAK-50JT |
| | | | Reversing | – | RSK-11JTC | RSK-12JTC⑬ | RSK-20JTC⑬ | RSK-21JTC⑬ | RSK-26JTC⑬ | RSK-35JTC⑬ | RSK-50JT⑬ |
| | | Enclosed type | Non reversing | PAK-6JMC | PAK-11JMC | PAK-12JMC | PAK-20JMC | PAK-21JMC | PAK-26JMC | PAK-35JMC | PAK-50JM |
| | | | Reversing | – | RSK-11JMC | RSK-12JMC⑬ | RSK-20JMC⑬ | RSK-21JMC⑬ | RSK-26JMC⑬ | RSK-35JMC⑬ | RSK-50JM⑬ |
| | | Thermal overload relay | | TJ-18JA | TJ-18 | TJ-18 | TJ-18 | TJ-18 | TJ-35 | TJ-35 | TJ-35 |
| | Magnetic starter (With phase-failure protection thermal overload relay) | Open type | Non reversing | PAK-6JGTC | PAK-11JGTC | PAK-12JGTC | PAK-20JGTC | PAK-21JGTC | PAK-26JGTC | PAK-35JGTC | PAK-50JGT |
| | | | Reversing | – | RSK-11JGTC | RSK-12JGTC⑬ | RSK-20JGTC⑬ | RSK-21JGTC⑬ | RSK-26JGTC⑬ | RSK-35JGTC⑬ | RSK-50JGT⑬ |
| | | Enclosed type | Non reversing | PAK-6JGMC | PAK-11JGMC | PAK-12JGMC | PAK-20JGMC | PAK-21JGMC | PAK-26JGMC | PAK-35JGMC | PAK-50JGM |
| | | | Reversing | – | RSK-11JGMC | RSK-12JGMC⑬ | RSK-20JGMC⑬ | RSK-21JGMC⑬ | RSK-26JGMC⑬ | RSK-35JGMC⑬ | RSK-50JGM⑬ |
| | | Thermal overload relay | | GTJ-18JA | GTJ-18 | GTJ-18 | GTJ-18 | GTJ-18 | GTJ-35 | GTJ-35 | GTJ-35 |
| | Magnetic starter (With 3-heaters thermal overload relay) | Open type | Non reversing | PAK-6JT-3C | PAK-11JT-3C | PAK-12JT-3C | PAK-20JT-3C | PAK-21JT-3C | PAK-26JT-3C | PAK-35JT-3C | PAK-50JT-3 |
| | | | Reversing | – | RSK-11JT-3C | RSK-12JT-3C⑬ | RSK-20JT-3C⑬ | RSK-21JT-3C⑬ | RSK-26JT-3C⑬ | RSK-35JT-3C⑬ | RSK-50JT-3⑬ |
| | | Enclosed type | Non reversing | PAK-6JM-3C | PAK-11JM-3C | PAK-12JM-3C | PAK-20JM-3C | PAK-21JM-3C | PAK-26JM-3C | PAK-35JM-3C | PAK-50JM-3 |
| | | | Reversing | – | RSK-11JM-3C | RSK-12JM-3C⑬ | RSK-20JM-3C⑬ | RSK-21JM-3C⑬ | RSK-26JM-3C⑬ | RSK-35JM-3C⑬ | RSK-50JM-3⑬ |
| | | Combination of thermal overload relay | | TJ-18JA-3 | TJ-18-3 | TJ-18-3 | TJ-18-3 | TJ-18-3 | TJ-35-3 | TJ-35-3 | TJ-35-3 |
| Ratings | AC-3: 3-phase squirrel-cage motor | | 200-240V | 2.2kW/8.7A | 3.7kW/13.5A | 4kW/15A | 7.5kW/27A | 7.5kW/27A | 10kW/35A | 15kW/52A | 18.5kW/65A |
| | | | 380-440V | 4kW/7.9A | 4.5kW/9.5A | 5.5kW/11.5A | 11kW/22A | 11kW/22A | 20kW/35A | 26kW/45A | 30kW/62A |
| | | | 500-550V | 4kW/6.3A | 4.5kW/7.6A | 5.5kW/9.2A | 11kW/18A | 11kW/18A | 20kW/28A | 26kW/36A | 30kW/45A |
| | AC-3: Single-phase motor | | 100-110V | 0.4kW/7.2A | 0.75kW/13.5A | 0.9kW/17A | 1.5kW/27A | 1.5kW/27A | 2kW/35A | 3kW/52A | – |
| | | | 200-240V | 0.75kW/6.8A | 1.5kW/13.5A | 1.8kW/17A | 3kW/27A | 3kW/27A | 4kW/35A | 6kW/52A | – |
| | AC-1: Resistance load (500,000 ops) | | 200-240V | 15A | 20A | 26A | 32A | 32A | 50A | 60A | 65A |
| | | | 380-440V | 15A | 20A | 26A | 32A | 32A | 50A | 60A | 65A |
| | | | 500-550V | 15A | 20A | 26A | 32A | 32A | 50A | 60A | 65A |
| | AC-4: Inching/plugging (30,000 ops) | | 200-240V | 1.1kW | 2.2kW | 3.7kW | 4kW | 5.5kW | 7.5kW | 10kW | 10kW |
| | | | 380-440V | 1.5kW | 3.7kW | 4.5kW | 5.5kW | 7.5kW | 11kW | 20kW | 20kW |
| | | | 500-550V | 1.5kW | 3.7kW | 4.5kW | 5.5kW | 7.5kW | 11kW | 20kW | 20kW |
| | Rated thermal current (A) | | | 15A | 20A | 26A | 32A | 32A | 50A | 60A | 65A |
| Performance | IEC 60947-4-1 | | | AC-3 | AC-3 | AC-3 | AC-3 | AC-3 | AC-3 | AC-3 | AC-3 |
| | Mechanical life($\times 10^6$ ops) | | | 2.5 | 5 | 5 | 5 | 5 | 5 | 5 | 5 |
| | Electrical life($\times 10^6$ ops) | | | 0.5 | 1 | 1 | 1 | 1 | 1 | 1 | 0.5 |
| | Switching frq. (ops/hour) | | | 1200 | 1200 | 1200 | 1200 | 1200 | 1200 | 1200 | 1200 |
| Auxiliary contacts | Contact configuration ① | Standard | Non reversing | 1NO(1NC) | 1NO(1NC) | 1NO(1NC) | 1NO(1NC) | 1NO1NC (2NO、2NC) | 2NO2NC | 2NO2NC | 2NO2NC |
| | | | Reversing⑬ | – | 1NC×2 | 1NO1NC×2 | 1NO1NC×2 | 1NO2NC×2 | 2NO3NC×2 | 2NO3NC×2 | 2NO3NC×2 |
| | | Option maximum config. | Non reversing | – | 3NO2NC | 3NO2NC | 3NO2NC | 3NO3NC | 4NO4NC | 4NO4NC | 4NO4NC |
| | | | Reversing | – | 2NO3NC×2 | 3NO3NC×2 | 3NO3NC×2 | 3NO4NC×2 | 4NO5NC×2 | 4NO5NC×2 | 4NO5NC×2 |
| | Rated operational current AC-15 | | 100-110V | 3A | 10A | 10A | 28A | 10A | 10A | 10A | 10A |
| | | | 200-240V | 2A | 6A | 6A | 20A | 6A | 6A | 6A | 6A |
| | | | 380-440V | 1.5A | 3A | 3A | 14A | 3A | 3A | 3A | 3A |
| | Rated thermal current | | | 10A | 10A | 10A | 32A | 10A | 10A | 10A | 10A |
| Thermal overload relays | Rated current (3-point set current scale) ②(A) | | | 0.28 – 0.35 – 0.42<br>0.4 – 0.5 – 0.6<br>0.56 – 0.7 – 0.84<br>0.64 – 0.8 – 0.96<br>0.8 – 1 – 1.2<br>1 – 1.2 – 1.4<br>1.2 – 1.4 – 1.6<br>1.4 – 1.8 – 2.2<br>1.8 – 2.3 – 2.8<br>2.4 – 3 – 3.6<br>2.9 – 3.6 – 4.3<br>3.7 – 4.6 – 5.5<br>4 – 5 – 6<br>5.4 – 6.7 – 8<br>6 – 7.5 – 9<br>7.4 – 9.2 – 11 | 0.28 – 0.35 – 0.42<br>0.4 – 0.5 – 0.6<br>0.56 – 0.7 – 0.84<br>0.64 – 0.8 – 0.96<br>0.8 – 1 – 1.2<br>1 – 1.2 – 1.4<br>1.2 – 1.4 – 1.6<br>1.4 – 1.8 – 2.2<br>1.8 – 2.3 – 2.8<br>2.4 – 3 – 3.6<br>2.9 – 3.6 – 4.3<br>3.7 – 4.6 – 5.5<br>4 – 5 – 6<br>5.4 – 6.7 – 8<br>6 – 7.5 – 9<br>7.4 – 9.2 – 11<br>8.8 – 11 – 13 | 0.28 – 0.35 – 0.42<br>0.4 – 0.5 – 0.6<br>0.56 – 0.7 – 0.84<br>0.64 – 0.8 – 0.96<br>0.8 – 1 – 1.2<br>1 – 1.2 – 1.4<br>1.2 – 1.4 – 1.6<br>1.4 – 1.8 – 2.2<br>1.8 – 2.3 – 2.8<br>2.4 – 3 – 3.6<br>2.9 – 3.6 – 4.3<br>3.7 – 4.6 – 5.5<br>4 – 5 – 6<br>5.4 – 6.7 – 8<br>6 – 7.5 – 9<br>7.4 – 9.2 – 11<br>8.8 – 11 – 13<br>11 – 13 – 15 | 0.28 – 0.35 – 0.42<br>0.4 – 0.5 – 0.6<br>0.56 – 0.7 – 0.84<br>0.64 – 0.8 – 0.96<br>0.8 – 1 – 1.2<br>1 – 1.2 – 1.4<br>1.2 – 1.4 – 1.6<br>1.4 – 1.8 – 2.2<br>1.8 – 2.3 – 2.8<br>2.4 – 3 – 3.6<br>2.9 – 3.6 – 4.3 | 3.7 – 4.6 – 5.5<br>4 – 5 – 6<br>5.4 – 6.7 – 8<br>6 – 7.5 – 9<br>7.4 – 9.2 – 11<br>8.8 – 11 – 13<br>11 – 13 – 15<br>12 – 15 – 18<br>15 – 18 – 20<br>18 – 22 – 26 | 7.4 – 9.2 – 11<br>8.8 – 11 – 13<br>11 – 13 – 15<br>12 – 15 – 18<br>15 – 18 – 20<br>18 – 22 – 26<br>21 – 26 – 31<br>24 – 30 – 36<br>28 – 34 – 42<br>34 – 42 – 48 | 7.4 – 9.2 – 11<br>8.8 – 11 – 13<br>11 – 13 – 15<br>12 – 15 – 18<br>15 – 18 – 20<br>18 – 22 – 26<br>21 – 26 – 31<br>24 – 30 – 36<br>28 – 34 – 42<br>34 – 42 – 48<br>40 – 48 – 52 | 7.4 – 9.2 – 11<br>8.8 – 11 – 13<br>11 – 13 – 15<br>12 – 15 – 18<br>15 – 18 – 20<br>18 – 22 – 26<br>21 – 26 – 31<br>24 – 30 – 36<br>28 – 34 – 42<br>34 – 42 – 48<br>40 – 48 – 52<br>46 – 56 – 65 |
| | Heater elements(STANDARD) | | | 2 | 2 | 2 | 2 | 2 | 2 | 2 | 2 |
| | Reset type | | | Manual/Auto | Manual/Auto | Manual/Auto | Manual/Auto | Manual/Auto | Manual/Auto | Manual/Auto | Manual/Auto |
| | Manual trip | | | ○ | ○ | ○ | ○ | ○ | ○ | ○ | ○ |
| | Output contact configuration | | | 1 NO1 NC | 1 NO1 NC | 1 NO1 NC | 1 NO1 NC | 1 NO1 NC | 1 NO1 NC | 1 NO1 NC | 1 NO1 NC |
| DIN rail mounting | | | | ○ | ○ | ○ | ○ | ○ | ○ | ○ | ○ |
| Auxiliary twin contacts | | | | ○ | ○ | ○ | – | ○ | ○ | ○ | ○ |
| Options | Auxiliary contact unit 2P | | | – | HAU-2 | HAU-2 | HAU-2 | HAU-2 | HAU-2 | HAU-2 | HAU-2 |
| | Auxiliary contact unit 4P | | | – | HAU-4 | HAU-4 | HAU-4 | HAU-4 | HAU-4 | HAU-4 | HAU-4 |
| | Terminal (protective) cover | | | C-21/TC-22③ | C-11/TC-22③ | C-11/TC-22③ | C-12/TC-22③ | C-13/TC-22③ | C-14/TC-25③ | C-14/TC-25③ | C-14/TC-25③ |
| | Coil surge absorption unit⑤ | | | – | SA-22/24 | | | | SA-32/34 | | |
| | DIN rail mounting adapter⑨ | | | – | – | – | – | – | – | – | – |

Notes. ①In case of addition HAU-4-22 (2NO+2NC) to the standard auxiliary contact configuration of magnetic contactor.
②The rated current of thermal overload relay, must be selected less than rated operational current (AC-3)of magnetic contactor.
③Type name of left side shows for magnetic contactor, and right side for themal overload relay.
(For Reversing type, please refer to P90.)
④Type name of left side shows for magnetic contactor, and right side for magnetic starter.
⑤The Type name of coil serge absorption unit changes with the rated values of operation voltage.
Please refer to P93. Moreover, PAK-50H~800J incorporate the surge absorption function.
⑥HAU-BL is designed for installation on left side of contactor, and HAU-BR on right.

| H Series | | | | | | | | | J Series | | | |
|---|---|---|---|---|---|---|---|---|---|---|---|---|
| 50H | 65H | 80H | 95H | 100H | 125H | 150H | 220H | 270H | 300J⑩ | 400J⑩ | 600J⑩ | 800J⑪ |
| PAK-50H | PAK-65H | PAK-80H | PAK-95H | PAK-100H | PAK-125H | PAK-150H | PAK-220H | PAK-270H | PAK-300J | PAK-400J | PAK-600J | PAK-800J |
| RSK-50H | RSK-65H | RSK-80H | RSK-95H | RSK-100H | RSK-125H | RSK-150H | RSK-220H | RSK-270H | RSK-300J | RSK-400J | – | – |
| PAK-50HTC | PAK-65HTC | PAK-80HTC | PAK-95HT | PAK-100HTC | PAK-125HTC | PAK-150HTC | PAK-220HTC | PAK-270HT | PAK-300JT | PAK-400JT | PAK-600JT | – |
| RSK-50HTC | RSK-65HTC | RSK-80HTC | RSK-95HT | RSK-100HTC | RSK-125HTC | RSK-150HTC | RSK-220HTC | RSK-270HT | RSK-300JT | RSK-400JT | – | – |
| PAK-50HMC | PAK-65HMC | PAK-80HMC | PAK-95HM | PAK-100HMC | PAK-125HMC | PAK-150HMC | PAK-220HMC | PAK-270HM | – | – | – | – |
| RSK-50HMC | RSK-65HMC | RSK-80HMC | RSK-95HM | RSK-100HMC | RSK-125HMC | RSK-150HMC | RSK-220HMC | RSK-270HM | – | – | – | – |
| TJ-50 | TJ-50 | TJ-50 | TJ-50 | TJ-125 | TJ-125 | TJ-125 | T J-220⑦ | T J-220⑦ | T-400⑧ | T-400⑧ | T-600⑧ | – |
| PAK-50HGTC | PAK-65HGTC | PAK-80HGTC | PAK-95HGT | PAK-100HGTC | PAK-125HGTC | PAK-150HGTC | PAK-220HGTC | PAK-270HGT | PAK-300JGT | PAK-400JGT | PAK-600JGT | – |
| RSK-50HGTC | RSK-65HGTC | RSK-80HGTC | RSK-95HGT | RSK-100HGTC | RSK-125HGTC | RSK-150HGTC | RSK-220HGTC | RSK-270HGT | RSK-300JGT | RSK-400JGT | – | – |
| PAK-50HGMC | PAK-65HGMC | PAK-80HGMC | PAK-95HGM | PAK-100HGMC | PAK-125HGMC | PAK-150HGMC | PAK-220HGMC | PAK-270HGM | – | – | – | – |
| RSK-50HGMC | RSK-65HGMC | RSK-80HGMC | RSK-95HGM | RSK-100HGMC | RSK-125HGMC | RSK-150HGMC | RSK-220HGMC | RSK-270HGM | – | – | – | – |
| GTJ-50 | GTJ-50 | GTJ-50 | GTJ-50 | GTJ-125 | GTJ-125 | GTJ-125 | GTJ-220⑦ | GTJ-220⑦ | GT-400⑧ | GT-400⑧ | GT-600⑧ | – |
| PAK-50HT-3C | PAK-65HT-3C | PAK-80HT-3C | PAK-95HT-3 | PAK-100HT-3C | PAK-125HT-3C | PAK-150HT-3C | PAK-220HT-3C | PAK-270HT-3 | – | – | – | – |
| RSK-50HT-3C | RSK-65HT-3C | RSK-80HT-3C | RSK-95HT-3 | RSK-100HT-3C | RSK-125HT-3C | RSK-150HT-3C | RSK-220HT-3C | RSK-270HT-3 | – | – | – | – |
| PAK-50HM-3C | PAK-65HM-3C | PAK-80HM-3C | PAK-95HM-3 | PAK-100HM-3C | PAK-125HM-3C | PAK-150HM-3C | PAK-220HM-3C | PAK-270HM-3 | – | – | – | – |
| RSK-50HM-3C | RSK-65HM-3C | RSK-80HM-3C | RSK-95HM-3 | RSK-100HM-3C | RSK-125HM-3C | RSK-150HM-3C | RSK-220HM-3C | RSK-270HM-3 | – | – | – | – |
| TJ-50-3 | TJ-50-3 | TJ-50-3 | TJ-50-3 | TJ-125-3 | TJ-125-3 | TJ-125-3 | TJ-220-3⑦ | TJ-220-3⑦ | – | – | – | – |
| 18.5kW/65A | 22kW/80A | 25kW/90A | 27kW/110A | 37kW/125A | 45kW/150A | 60kW/200A | 80kW/275A | 90kW/310A | 90kW/300A | 115kW/400A | 160kW/600A | (AC-2) 200kW/800A |
| 30kW/62A | 37kW/75A | 45kW/90A | 55kW/110A | 55kW/110A | 60kW/125A | 75kW/150A | 90kW/180A | 132kW/265A | 150kW/300A | 200kW/400A | 300kW/600A | (AC-2) 400kW/800A |
| 30kW/45A | 37kW/60A | 45kW/72A | 55kW/90A | 55kW/90A | 70kW/110A | 75kW/120A | 90kW/150A | 132kW/200A | 160kW/250A | 200kW/350A | 300kW/500A | – |
| – | – | – | – | – | – | – | – | – | – | – | – | – |
| – | – | – | – | – | – | – | – | – | – | – | – | – |
| 75A | 90A | 110A | 110A | 150A | 170A | 220A | 275A | 310A | 350A | 420A | 600A | 800A⑫ |
| 75A | 90A | 110A | 110A | 150A | 170A | 220A | 275A | 310A | 350A | 420A | 600A | 800A⑫ |
| 75A | 90A | 110A | 110A | 150A | 170A | 220A | 275A | 310A | – | – | – | – |
| 7.5kW | 11kW | 15kW | 19kW | 19kW | 25kW | 30kW | 45kW | 55kW | 55kW | 75kW | 90kW | – |
| 15kW | 22kW | 30kW | 37kW | 37kW | 45kW | 55kW | 75kW | 80kW | 95kW | 110kW | 150kW | – |
| 15kW | 22kW | 30kW | 37kW | 37kW | 45kW | 55kW | 75kW | 80kW | – | – | – | – |
| 75A | 90A | 110A | 110A | 150A | 170A | 220A | 275A | 310A | 350A | 420A | 600A | 800A |
| AC-3 | AC-3 | AC-3 | AC-3 | AC-3 | AC-3 | AC-3 | AC-3 | AC-3 | AC-3 | AC-3 | AC-3 | AC-2 |
| 5 | 5 | 5 | 5 | 5 | 5 | 5 | 5 | 5 | 5 | 5 | 5 | 1 |
| 1 | 1 | 1 | 1 | 1 | 1 | 1 | 1 | 0.5 | 0.5 | 0.5 | 0.5 | 0.1 |
| 1200 | 1200 | 1200 | 1200 | 1200 | 1200 | 1200 | 1200 | 1200 | 1200 | 1200 | 1200 | 1200 |
| 2NO2NC | 2NO2NC | 2NO2NC | 2NO2NC | 2NO2NC | 2NO2NC | 2NO2NC | 2NO2NC | 2NO2NC | 3NO3NC | 3NO3NC | 4NO4NC | 4NO4NC |
| 2NO2NC×2 | 2NO2NC×2 | 2NO2NC×2 | 2NO2NC×2 | 2NO2NC×2 | 2NO2NC×2 | 2NO2NC×2 | 2NO2NC×2 | 2NO2NC×2 | 3NO3NC×2 | 3NO3NC×2 | – | – |
| 4NO4NC | 4NO4NC | 4NO4NC | 4NO4NC | 4NO4NC | 4NO4NC | 4NO4NC | 4NO4NC | 4NO4NC | – | – | – | – |
| 4NO4NC×2 | 4NO4NC×2 | 4NO4NC×2 | 4NO4NC×2 | – | – | – | – | – | – | – | – | – |
| 10A | 10A | 10A | 10A | 10A | 10A | 10A | 10A | 10A | 2A | 2A | 2A | 2A |
| 6A | 6A | 6A | 6A | 6A | 6A | 6A | 6A | 6A | 2A | 2A | 2A | 2A |
| 3A | 3A | 3A | 3A | 3A | 3A | 3A | 3A | 3A | 1A | 1A | 1A | 1A |
| 10A | 10A | 10A | 10A | 10A | 10A | 10A | 10A | 10A | 10A | 10A | 10A | 10A |
| 12 – **15** – 18<br>18 – **22** – 26<br>21 – **26** – 31<br>24 – **30** – 36<br>28 – **34** – 42<br>34 – **42** – 48<br>40 – **48** – 58<br>46 – **56** – 64<br>56 – **68** – 80 | 12 – **15** – 18<br>18 – **22** – 26<br>21 – **26** – 31<br>24 – **30** – 36<br>28 – **34** – 42<br>34 – **42** – 48<br>40 – **48** – 58<br>46 – **56** – 64<br>56 – **68** – 80<br>68 – **80** – 94 | 12 – **15** – 18<br>18 – **22** – 26<br>21 – **26** – 31<br>24 – **30** – 36<br>28 – **34** – 42<br>34 – **42** – 48<br>40 – **48** – 58<br>46 – **56** – 64<br>56 – **68** – 80<br>68 – **80** – 94<br>76 – **90** – 100 | | 34 – **42** – 48<br>40 – **48** – 58<br>46 – **56** – 64<br>56 – **68** – 80<br>68 – **80** – 94<br>76 – **90** – 100<br>85 – **105** – 125<br>110 – **130** – 150 | 34 – **42** – 48<br>40 – **48** – 58<br>46 – **56** – 64<br>56 – **68** – 80<br>68 – **80** – 94<br>76 – **90** – 100<br>85 – **105** – 125<br>110 – **130** – 150<br>130 – **160** – 190 | 34 – **42** – 48<br>40 – **48** – 58<br>46 – **56** – 64<br>56 – **68** – 80<br>68 – **80** – 94<br>76 – **90** – 100<br>85 – **105** – 125<br>110 – **130** – 150<br>130 – **160** – 190<br>170 – **200** – 230 | 65 – **80** – 95<br>85 – **105** – 125<br>105 – **130** – 150<br>130 – **160** – 190<br>150 – **190** – 230<br>185 – **230** – 275<br>215 – **270** – 325 | 65 – **80** – 95<br>85 – **105** – 125<br>105 – **130** – 150<br>130 – **160** – 190<br>150 – **190** – 230<br>185 – **230** – 275<br>215 – **270** – 325<br>265 – **330** – 400 | OPEN-PHASE MODEL<br>110 – **140** – 180<br>170 – **240** – 290<br>280 – **380** – 440<br>110 – **140** – 170<br>140 – **180** – 220<br>200 – **240** – 280<br>240 – **300** – 360 | STANDARD MODEL<br>110 – **140** – 180<br>170 – **240** – 290<br>280 – **380** – 440<br>110 – **140** – 170<br>140 – **180** – 220<br>200 – **240** – 280<br>240 – **300** – 360<br>300 – **380** – 450 | 110 – **140** – 180<br>170 – **240** – 290<br>280 – **380** – 440<br>400 – **500** – 600<br>110 – **140** – 170<br>140 – **180** – 220<br>200 – **240** – 280<br>240 – **300** – 360<br>300 – **380** – 450<br>400 – **500** – 600 | – |
| 2 | 2 | 2 | 2 | 2 | 2 | 2 | 2 | 2 | 2 | 2 | 2 | – |
| Manual/Auto | Manual/Auto | Manual/Auto | Manual/Auto | Manual/Auto | Manual/Auto | Manual/Auto | Manual/Auto | Manual/Auto | Manual/Auto | Manual/Auto | Manual/Auto | – |
| ○ | ○ | ○ | ○ | ○ | ○ | ○ | ○ | ○ | ○ | ○ | ○ | – |
| 1 NO1 NC | 1 NO1 NC | 1 NO1 NC | 1 NO1 NC | 1 NO1 NC | 1 NO1 NC | 1 NO1 NC | 1 NO1 NC | 1 NO1 NC | 1NO1NC | 1NO1NC | 1NO1NC | – |
| Adapters are necessary | | | | – | – | – | – | – | – | – | – | – |
| ○ | ○ | ○ | ○ | ○ | ○ | ○ | ○ | ○ | ○ | ○ | ○ | ○ |
| HAU-2 | HAU-2 | HAU-2 | HAU-2 | – | | | | | – | | | – |
| HAU-4 | HAU-4 | HAU-4 | HAU-4 | HAU-BL+HAU-BR⑥ | | | | | – | | | – |
| C-4/TC-4④ | C-4/TC-4④ | C-4/TC-4④ | C-4/TC-4④ | C-5/TC-5A④ | C-5/TC-5A④ | C-6/TC-6A④ | C-6/TC-7A④ | C-6/TC-7A④ | C-8/TC-8④ | C-8/TC-8④ | C-9/TC-9④ | C-9/ – ④ |
| – | | | | | | | | | – | | | |
| D - 5 A | | | | – | | | | | – | | | |

⑦TJ-220 is the combination of TJ-35C and CT contained in molded case.
⑧T-400 and T-600 are the combination of T-21 and CT.
⑨PAK-6JC through 50J are not required any adapters.
⑩Magnetic starters with 3-heaters thermal overload relay of 300J to 600J frame are not manufactured.
⑪Magnetic starter of 800J frame is not manufactured.
⑫Electric durability of AC-1 rating for PAK-800J is 100,000 operations.
⑬LO1, LO2, RO1, RO2 are contacts for exclusive use of electrical interlock.

# Manufactured models and model explanation



## Manufactured models

| Series name | | | J Series | | | | | | | | H Series | | | | | | | | | J Series | | | |
|---|---|---|---|---|---|---|---|---|---|---|---|---|---|---|---|---|---|---|---|---|---|---|---|
| Frame | | | 6JC | 11J | 12J | 20J | 21J | 26J | 35J | 50J | 50H | 65H | 80H | 95H | 100H | 125H | 150H | 220H | 270H | 300J | 400J | 600J | 800J |
| 3-phase squirrel-cage induction motor (AC-3 class) 3-phase wound rotor induction motor (AC-2 class) (kW) | | 240V | 2.2 | 3.7 | 4 | 7.5 | 7.5 | 10 | 15 | 18.5 | 18.5 | 22 | 25 | 27 | 37 | 45 | 60 | 80 | 90 | 90 | 115 | 160 | (AC-2) 200 |
| | | 440V | 4 | 4.5 | 5.5 | 11 | 11 | 20 | 26 | 30 | 30 | 37 | 45 | 55 | 55 | 60 | 75 | 90 | 132 | 150 | 200 | 300 | (AC-2) 400 |
| | | 550V | 4 | 4.5 | 5.5 | 11 | 11 | 20 | 26 | 30 | 30 | 37 | 45 | 55 | 55 | 70 | 75 | 90 | 132 | 160 | 200 | 300 | — |
| Contact configuration ( ) indicates data to be specified | | Main contact | 3NO | | | | 3NO | 3NO | | | | | | | | | | | | 3NO | | 3NO | |
| | | Auxiliary contact | 1NO(1NC) | | | | 1NO1NC (2NO·2NC) | 2NO2NC | | | | | | | | | | | | 3NO3NC | | 4NO4NC | |
| Magnetic starters / Open type | Non-reversing model | PAK-□T(C) | ◎ | ◎ | ◎ | ◎ | ◎ | ◎ | ◎ | ◎ | ◎ | ◎ | ◎ | ◎ | ◎ | ◎ | ◎ | ◎ | ◎ | ◎ | ◎ | ◎ | — |
| | Reversing model | RSK-□T(C) | — | ◎ | ◎ | ◎ | ◎ | ◎ | ◎ | ◎ | ◎ | ◎ | ◎ | ◎ | ◎ | ◎ | ◎ | ◎ | ◎ | ◎ | ◎ | — | — |
| | With 3-heaters thermal overload relay | PAK-□T-3(C) | ○ | ○ | ○ | ○ | ○ | ○ | ○ | ○ | ○ | ○ | ○ | ○ | ○ | ○ | ○ | ○ | ○ | — | — | — | — |
| | With phase-failure protection thermal overload relay | PAK-□GT(C) | ○ | ○ | ○ | ○ | ○ | ○ | ○ | ○ | ○ | ○ | ○ | ○ | ○ | ○ | ○ | ○ | ○ | ○ | ○ | ○ | — |
| | DIN rail mount model | PAK-□T-DN(C) | DIN mounting standard in 6JTC to 50JT | | | | | | | | ○① | ○① | ○① | ○① | — | — | — | — | — | — | — | — | — |
| | With slow-trip thermal overload relay | PAK-□T-SL2(C) | — | ○ | ○ | ○ | ○ | ○ | ○ | ○ | ○ | ○ | ○ | ○ | ○ | ○ | ○ | — | — | — | — | — | — |
| | With fast-trip thermal overload relay | PAK-□T-F(C) | ○ | ○ | ○ | ○ | ○ | ○ | ○ | ○ | ○ | ○ | ○ | ○ | ○ | ○ | ○ | — | — | — | — | — | — |
| Magnetic starters / Enclosed type | Non-reversing model | PAK-□M(C) | ◎ | ◎ | ◎ | ◎ | ◎ | ◎ | ◎ | ◎ | ◎ | ◎ | ◎ | ◎ | ◎ | ◎ | ◎ | ◎ | ◎ | — | — | — | — |
| | Reversing model | RSK-□M(C) | — | ◎ | ◎ | ◎ | ◎ | ◎ | ◎ | ◎ | ◎ | ◎ | ◎ | ◎ | ◎ | ◎ | ◎ | ◎ | ◎ | — | — | — | — |
| | With 3-heaters thermal overload relay | PAK-□M-3(C) | ○ | ○ | ○ | ○ | ○ | ○ | ○ | ○ | ○ | ○ | ○ | ○ | ○ | ○ | ○ | ○ | ○ | — | — | — | — |
| | With phase-failure protection thermal overload relay | PAK-□GM(C) | ○ | ○ | ○ | ○ | ○ | ○ | ○ | ○ | ○ | ○ | ○ | ○ | ○ | ○ | ○ | ○ | ○ | — | — | — | — |
| | With ammeter | PAK-□M-A(C) | △ | △ | △ | △ | △ | △ | △ | △ | △ | △ | △ | △ | △ | △ | △ | △ | △ | — | — | — | — |
| | With push button | PAK-□M-D(C) | △ | △ | △ | △ | △ | △ | △ | △ | △ | △ | △ | △ | △ | △ | △ | △ | △ | — | — | — | — |
| | With slow-trip thermal overload relay | PAK-□M-SL2(C) | — | △ | △ | △ | △ | △ | △ | △ | △ | △ | △ | △ | △ | △ | △ | — | — | — | — | — | — |
| | With fast-trip thermal overload relay | PAK-□M-F(C) | ○ | ○ | ○ | ○ | ○ | ○ | ○ | ○ | ○ | ○ | ○ | ○ | ○ | ○ | ○ | — | — | — | — | — | — |
| Magnetic contactors / Open type | Non-reversing model | PAK-□ | ◎ | ◎ | ◎ | ◎ | ◎ | ◎ | ◎ | ◎ | ◎ | ◎ | ◎ | ◎ | ◎ | ◎ | ◎ | ◎ | ◎ | ◎ | ◎ | ◎ | ◎ |
| | Reversing model | RSK-□ | — | ◎ | ◎ | ◎ | ◎ | ◎ | ◎ | ◎ | ◎ | ◎ | ◎ | ◎ | ◎ | ◎ | ◎ | ◎ | ◎ | ◎ | ◎ | — | — |
| | DC-operated model | PAK-□DCC | ○ | — | — | — | — | — | — | — | — | — | — | — | — | — | — | — | — | — | — | — | — |
| | DIN rail mount model | PAK-□-DN | DIN mounting standard in 6JC to 50J | | | | | | | | ○① | ○① | ○① | ○① | — | — | — | — | — | — | — | — | — |
| | Mechanical latch model: Non-reversing model | PAK-□L | — | — | — | — | △ | — | △ | — | — | — | △ | — | — | — | △ | △ | — | — | — | — | — |
| | Mechanical latch model: Reversing model | RSK-□L | | | | | | | | | | | | | | | | | | | | | |
| Magnetic contactors / Enclosed type | Non-reversing model | PAK-□B(C) | ○ | ○ | ○ | ○ | ○ | ○ | ○ | ○ | ○ | ○ | ○ | ○ | ○ | ○ | ○ | ○ | ○ | — | — | — | — |
| | Reversing model | RSK-□B | — | ○ | ○ | ○ | ○ | ○ | ○ | ○ | ○ | ○ | ○ | ○ | ○ | ○ | ○ | ○ | ○ | — | — | — | — |

Note. ①Can be DIN-mountable with rail adapter.

Symbols used
(1) ◎ Standard models, with AC100-110V or AC200-220V coil.
(2) ○ Semi-standard models (ask for delivery schedule).
(3) △ Models manufactured to order (ask for delivery schedule).
(4) — Not manufactured.

## Model explanation

**PAK — 20 JT 20 — 3 A C**

**Type**
PAK…Standard model
RSK…Reversing model

**Model**
PAK-□
RSK-□

| J | | H | |
|---|---|---|---|
| 6 | 300 | 50 | 270 |
| 11 | 400 | 65 | |
| 12 | 600 | 80 | |
| 20 | 800 | 95 | |
| 21 | | 100 | |
| 26 | | 125 | |
| 35 | | 150 | |
| 50 | | 220 | |

※Reversing models available for 11J to 400J.

**Specifications**

| PAK-J | PAK-H |
|---|---|
| J …… Magnetic contactor①② | H …… Magnetic contactor② |
| JT …… Magnetic starter② | HT …… Magnetic starter② |
| JM …… Magnetic starter③ | HM …… Magnetic starter③ |
| JB …… Magnetic contactor③ | HB …… Magnetic contactor③ |
| JGT …… Magnetic starter with phase-failure protection thermal overload relay② | HGT …… Magnetic starter with open phase thermal overload relay② |
| JGM …… Magnetic starter with phase-failure protection thermal overload relay③ | HGM …… Magnetic starter with open phase thermal overload relay③ |
| JDCC …… DC-operated magnetic contactor② | HUL …… UL-certified magnetic contactor② |
| JUL …… UL-certified magnetic contactor② | HL …… Mechanical latch magnetic contactor② |
| JL …… Mechanical latch magnetic contactor② | |

Notes. ①Only PAK-6J accompanies "C" at the end of model name.
②Open type
③Enclosed type

**Auxiliary contact configuration**
PAK-6JC, 11J 12J, 20J
Blank……1NO
31……1NC
PAK-21J
Blank……1NO1NC
20……2NO
02……2NC
PAK-26J～270H
Blank……2NO2NC
PAK-300, 400J
Blank……3NO3NC
PAK-600, 800J
Blank……4NO4NC

**Thermal**
3 … Thermal overload relay with 3 heaters
SL2 … With slow-trip thermal overload relay
F … With fast-trip thermal overload relay

**Options**
A … Ammeter
D … Push button
R … External reset button
DN … DIN rail mount model
Notes. Only with enclosure

**Career mark**
Only for magnetic starters. However, except for 50J, 95H, 270H, 300J～600J models.

# Selection process

## Selection process

| | | | | |
|---|---|---|---|---|
| Main contact capacity | Load type | Motor | · Standard application for 3-phase squirrel-cage induction motor and single-phase motor | Page 9 |
| | | Resistive load | · Standard application for resistive load | Page 9 |
| | | Capacitive load | · Application for single-phase and 3-phase capacitive circuits | Page 23 |
| Motor operation | Starting method | Direct starting | · Standard application for 3-phase squirrel-cage induction motor and single-phase motor | Page 9 |
| | | Inching and plugging | · Application for inching and plugging | Page 19 |
| | | Reversing operation | · Reversing magnetic contactors and starters | Page 45 |
| | | Star-delta starting | · Standard application for Star-Delta starters<br>· Automatic star-delta starter | Page 20<br>Page 96 |
| Required durability | | Electrical life | · Electrical life curve<br>· Direct-starting operation with consideration of electrical life | Page 15,16 |
| | | Mechanical life | · Performance | Page 15 |
| Auxiliary contacts | | Configuration | · Auxiliary contact specifications | Page 5,10 |
| Control circuit | Operating coil | Coil voltage and frequency | Operating coil ratings | Page 11 |
| Operating environment | | Installation environment | · Standard service conditions | Page 26 |
| Selection of thermal overload relay | Heater capacity selection, according to motor capacity | Motor capacity | · Standard application of thermal overload relays for motors | Page 14 |
| | Starting time | Short (application for submerged pump compressor) | · Magnetic starter with fast-trip thermal overload relay | |
| | | Long (application for fans and blowers) | · Magnetic starter with slow-trip thermal overload relay | Page 59 |
| | Protection | Overload and lock protection | · Standard magnetic starter<br>· Magnetic starter with 3-heaters thermal overload relay | Page 30<br>Page 30 |
| | | Phase-failure protection | · Magnetic starter with phase-failure protection thermal overload relay | Page 30 |

# Main contact ratings



## Conforming to IEC

| Use for / Frame | 3-phase squirrel-cage induction motor (AC-3) | | | 3-phase wound induction motor (AC-2) | | | Single-phase motor (AC-3) | | | | Resistive (AC-1) | | Rated thermal current [A] |
|---|---|---|---|---|---|---|---|---|---|---|---|---|---|
| | Rated capacity [kW] | | | Rated operational current [A] | | | Rated capacity [kW] | | Rated operational current [A] | | Rated operational current [A] | | |
| | 200~240V | 380~440V | 500~550V | 200~240V | 380~440V | 500~550V | 100~110V | 200~240V | 100~110V | 200~240V | 200~240V | 380~440V | |
| 6JC | 2.2 | 4 | 4 | 8.7 | 7.9 | 6.3 | 0.4 | 0.75 | 7.2 | 6.8 | 15 | 15 | 15 |
| 11J | 3.7 | 4.5 | 4.5 | 13.5 | 9.5 | 7.6 | 0.75 | 1.5 | 13.5 | 13.5 | 20 | 20 | 20 |
| 12J | 4 | 5.5 | 5.5 | 15 | 11.5 | 9.2 | 0.9 | 1.8 | 17 | 17 | 26 | 26 | 26 |
| 20J | 7.5 | 11 | 11 | 27 | 22 | 18 | 1.5 | 3 | 27 | 27 | 32 | 32 | 32 |
| 21J | 7.5 | 11 | 11 | 27 | 22 | 18 | 1.5 | 3 | 27 | 27 | 32 | 32 | 32 |
| 26J | 10 | 20 | 20 | 35 | 35 | 28 | 2 | 4 | 35 | 35 | 50 | 50 | 50 |
| 35J | 15 | 26 | 26 | 52 | 45 | 36 | 3 | 6 | 52 | 52 | 60 | 60 | 60 |
| 50J | 18.5 | 30 | 30 | 65 | 62 | 45 | – | – | – | – | 65 | 65 | 65 |
| 50H | 18.5 | 30 | 30 | 65 | 62 | 45 | – | – | – | – | 75 | 75 | 75 |
| 65H | 22 | 37 | 37 | 80 | 75 | 60 | – | – | – | – | 90 | 90 | 90 |
| 80H | 25 | 45 | 45 | 90 | 90 | 72 | – | – | – | – | 110 | 110 | 110 |
| 95H | 27 | 55 | 55 | 110 | 110 | 90 | – | – | – | – | 110 | 110 | 110 |
| 100H | 37 | 55 | 55 | 125 | 110 | 90 | – | – | – | – | 150 | 150 | 150 |
| 125H | 45 | 60 | 70 | 150 | 125 | 110 | – | – | – | – | 170 | 170 | 170 |
| 150H | 60 | 75 | 75 | 200 | 150 | 120 | – | – | – | – | 220 | 220 | 220 |
| 220H | 80 | 90 | 90 | 275 | 180 | 150 | – | – | – | – | 275 | 275 | 275 |
| 270H | 90 | 132 | 132 | 310 | 265 | 250 | – | – | – | – | 310 | 310 | 310 |
| 300J | 90 | 150 | 160 | 300 | 300 | 250 | – | – | – | – | 350 | 350 | 350 |
| 400J | 115 | 200 | 200 | 400 | 400 | 350 | – | – | – | – | 420 | 420 | 420 |
| 600J | 160 | 300 | 300 | 600 | 600 | 500 | – | – | – | – | 600 | 600 | 600 |
| 800J | 200 (AC-2) | 400 (AC-2) | – | 800 (AC-2) | 800 (AC-2) | – | – | – | – | – | 800 | 800 | 800 |

Notes. ①AC-3-class electrical life is 1 million ops for 11J to 35J and 50H to 220H, 0.5 million ops for 6JC and 50J and 270H to 600J.
②AC-2-class electrical life is 0.1 million ops for 800J.
③AC-1-class electrical life is 0.5 million ops, and 0.1 million ops for 800J.

## Classification by breaking capacity and making capacity

According to JIS, IEC, EN and VDE, the application of AC magnetic contactor is classified by breaking capacity and making capacity.

| Class | Use | Make | | Break | |
|---|---|---|---|---|---|
| | | JIS, IEC, EN, VDE | | JIS, IEC, EN, VDE | |
| | | Current | Power factor | Current | Power factor |
| AC-1 | Switching of resistance load | 1.5Ie | 0.8 | 1.5Ie | 0.8 |
| AC-2 | Start and stop of wound rotor induction motor | 4Ie | 0.65 | 4Ie | 0.65 |
| AC-3 | Start and stop of squirrel-cage induction motor | 8Ie<br>Only making10Ie | 0.45(Ie100≦A)<br>0.35(Ie100>A) | 8Ie | 0.45(Ie100≦A)<br>0.35(Ie100>A) |
| AC-4 | Inching and plugging of squirrel-cage induction motor | 10Ie<br>Only making12Ie | 0.45(Ie100≦A)<br>0.35(Ie100>A) | 10Ie | 0.45(Ie100≦A)<br>0.35(Ie100>A) |

Notes. ①Rated operational current
②Conforming to;
· JIS C 8201-4-1
· IEC 60947-4-1 : Low-voltage switchgear and controlgear, Part 4. Contactors and motor-starters
· EN 60947-4-1 : Specification for Low-voltage switchgear and controlgear, Part 4. Contactors and motor-starters
· VDE 0660 : Switchgear and controlgear, Part 102 Contactors.
③The values in ( ) show the limited scope of rated operational current (Ie).
④According to JIS C 8201-4-1, AC-2 is used for starting, inching and plugging of wound rotor induction motor.

# Auxiliary contact ratings



## Conforming to IEC

| Frame | Rated thermal current〔A〕 | Rated operational current (A) | | | | | | Minimum operating voltage/current |
|---|---|---|---|---|---|---|---|---|
| | | AC | | | DC | | | |
| | | Rated operational voltage (V) | AC-15 class (coil load) | AC-12 class (resistive load) | Rated operational voltage (V) | DC-13 class (coil load) | DC-12 class (resistive load) | |
| 6JC | 10 | 110 | 3 | 5 | 24 | 4 | 10 | 12V 10mA |
| | | 240 | 2 | 4 | 48 | 0.7 | 10 | |
| | | 440 | 1.5 | 3 | 110 | 0.5 | 7 | |
| | | 550 | 1.8 | 2.7 | 220 | 0.2 | 0.8 | |
| 11J ～12J<br>21J～270H | 10 | 110 | 10 | 10 | 24 | 10 | 10 | 24V 10mA |
| | | 240 | 6 | 6 | 48 | 2 | 10 | |
| | | 440 | 3 | 4 | 110 | 1 | 10 | |
| | | 550 | 3 | 3 | 220 | 0.25 | 1.2 | |
| 20J | 32 | 110 | 28 | 32 | 24 | 12 | 20 | 48V 0.1A |
| | | 240 | 20 | 32 | 48 | 3 | 15 | |
| | | 440 | 14 | 29 | 110 | 1 | 12 | |
| | | 550 | 12 | 25 | 220 | 0.3 | 2 | |
| 300J～800J | 10 | 110 | 2 | 10 | 24 | — | 2 | 24V 10mA |
| | | 220 | 2 | 10 | 48 | — | 2 | |
| | | 440 | 1 | 10 | 110 | — | 2 | |
| | | 550 | 0.75 | — | 220 | — | 2 | |

## Conforming to UL

| Frame | Rated thermal current〔A〕 | Rated operational current (A) | | |
|---|---|---|---|---|
| | | AC | | |
| | | Rated operational voltage (V) | Make | Break |
| 11J<br>21J<br>35J<br>50H<br>80H | 10 | 120 | 60 | 6 |
| | | 240 | 30 | 3 |
| | | 480 | 15 | 1.5 |
| | | 600 | 12 | 1.2 |

# Operation coil ratings

2

## AC operated

| Specification | ① Nominal coil voltage | ② Rated coil voltage | ③ Single rating | Model 6JC～270H 8JS | Model 300J～800J | Coil nameplate color |
|---|---|---|---|---|---|---|
| Standard | AC100V | 100V 50Hz<br>100-110V 60Hz | 110V 60Hz | ○ | — | Blue |
| | | 100-110V 50/60Hz | — | — | ○ | Yellow |
| | AC200V | 200V 50Hz<br>200-220V 60Hz | 220V 60Hz | ○ | — | 〃 |
| | | 200-220V 50/60Hz | — | — | ○ | White |
| | AC 24V | 24V 50/60Hz | — | ○ | — | Green |
| | AC 50V | 48-50V 50Hz<br>48-55V 60Hz | — | ○ | — | White |
| Semi-standard | AC110V | 105-110V 50Hz<br>110-120V 60Hz | 110V 50Hz<br>120V 60Hz | ○ | — | 〃 |
| | AC120V | 110-120V 50Hz<br>120-130V 60Hz | 120V 50Hz<br>127V 60Hz | ○ | — | 〃 |
| | AC127V | 120-127V 50Hz<br>127-140V 60Hz | — | ○ | — | 〃 |
| | AC220V | 208-220V 50Hz<br>220-240V 60Hz | 220V 50Hz<br>240V 60Hz | ○ | — | 〃 |
| | AC240V | 220-240V 50Hz<br>240-260V 60Hz | 260V 60Hz | ○ | — | 〃 |
| | AC260V | 250-260V 50Hz<br>260-280V 60Hz | — | ○ | — | 〃 |
| | AC380V | 346-380V 50Hz<br>380-400V 60Hz | 400V 60Hz | ○ | — | 〃 |
| | AC400V | 380-400V 50Hz<br>400-440V 60Hz | 380V 50Hz<br>440V 60Hz | ○ | — | Pink |
| | | 400-440V 50/60Hz | — | — | ○ | Blue |
| | AC440V ④ | 415-440V 50Hz<br>440-480V 60Hz | — | ○ | — | White |
| | AC500V ④ | 460-500V 50Hz<br>500-550V 60Hz | — | ○ | — | 〃 |
| Special | AC110V | 110-120V 50/60Hz | — | — | ○ | Blue |
| | AC220V | 220-240V 50/60Hz | — | — | ○ | 〃 |
| | AC346V | 346-380V 50/60Hz | — | — | ○ | 〃 |
| Coil Terminal symbol | | | | A1 A2 | | |

Notes. ①Nominal coil voltage is designed to simplify specification in ordering. Please use nominal coil voltage when ordering.
②Rated coil voltage indicates the rated operating voltage and frequency marked on the coil.
③The single rating may be used for ordering (eg., 110V 60Hz), but the products are marked with the rated coil voltage.
Single rating can be selected by several coil votages, however being concluded to one of above nominal coil voltage.
④PAK-6JC are not manufactured.

# Operation electromagnet ratings



## For 110V

| Model \ Item | Operation coil ratings | | Operating voltage (V) | | Electromagnetic capacity (VA) | | Inrush current (A) | Exciting current (mA) | Loss (W) |
|---|---|---|---|---|---|---|---|---|---|
| | Voltage (V) | Frequency (Hz) | Minimum (less or equal) | Open (less or equal) | Inrush(max) | Sealed(max) | | | Sealed |
| PAK-6JC | 100 | 50 | 73 | 70 | 22 | 6.4 | 0.14~0.22 | 38~64 | 2.1~3.5 |
| | 100-110 | 60 | 77.5 | 70 | 24 | 6.9 | 0.14~0.22 | 35~63 | 2.3~3.7 |
| PAK-11J<br>PAK-12J | 100 | 50 | 72.5 | 70 | 64 | 11.0 | 0.52~0.64 | 66~110 | 2.2~3.7 |
| | 100-110 | 60 | 77.5 | 70 | 73 | 11.0 | 0.51~0.67 | 61~100 | 2.2~3.7 |
| PAK-20J | 100 | 50 | 72.5 | 70 | 64 | 11.0 | 0.52~0.64 | 66~110 | 2.2~3.7 |
| | 100-110 | 60 | 77.5 | 70 | 73 | 11.0 | 0.51~0.67 | 61~100 | 2.2~3.7 |
| PAK-21J | 100 | 50 | 72.5 | 70 | 64 | 11.0 | 0.52~0.64 | 66~100 | 2.2~3.7 |
| | 100-110 | 60 | 77.5 | 70 | 73 | 11.0 | 0.51~0.67 | 61~100 | 2.2~3.7 |
| PAK-26J<br>PAK-35J<br>PAK-50J | 100 | 50 | 76.5 | 70 | 112 | 17.2 | 0.98~1.12 | 103~172 | 3.9~6.7 |
| | 100-110 | 60 | 80 | 70 | 117 | 17.9 | 0.95~1.07 | 96~163 | 4.2~7.0 |
| PAK-50H | 100 | 50 | 81.5 | 65 | 186 | 27 | 1.15~1.86 | 160~270 | 4.7~8.5 |
| | 100-110 | 60 | 81.5 | 65 | 196 | 27 | 1.13~1.79 | 145~246 | 5~9.0 |
| PAK-65H<br>PAK-80H<br>PAK-95H | 100 | 50 | 81.5 | 62.5 | 250 | 30 | 1.65~2.50 | 180~300 | 6.4~9.1 |
| | 100-110 | 60 | 81.5 | 62.5 | 265 | 29 | 1.59~2.41 | 163~264 | 7.0~10.0 |
| PAK-100H<br>PAK-125H | 100 | 50 | 82.5 | 65 | 470 | 43 | 3.85~4.70 | 350~430 | 10~16.5 |
| | 100-110 | 60 | 81.5 | 65 | 490 | 44 | 3.59~4.46 | 322~400 | 11~18.5 |
| PAK-150H | 100 | 50 | 79.5 | 60 | 682 | 64 | 5.86~6.82 | 380~640 | 9.5~17.5 |
| | 100-110 | 60 | 79.5 | 60 | 726 | 61 | 5.67~6.60 | 336~554 | 8.1~19 |
| PAK-220H<br>PAK-270H | 100 | 50 | 79.5 | 60 | 682 | 64 | 5.86~6.82 | 380~640 | 9.5~17.5 |
| | 100-110 | 60 | 79.5 | 60 | 726 | 61 | 5.67~6.60 | 336~554 | 8.1~19 |
| PAK-300J<br>PAK-400J | 100-110 | 50/60 | 75 | 70 | 1476 | 9.3 | −⑥ | 84(max)⑦ | 7.7(max)⑦ |
| PAK-600J<br>PAK-800J | 100-110 | 50/60 | 75 | 70 | 1771 | 12.2 | −⑥ | 105(max)⑦ | 11.0(max)⑦ |

| Model \ Item | Operation coil ratings | | Power factor | Main contact operating time (ms) | | Auxiliary NO operating time (ms) | | Auxiliary NC operating time (ms) | |
|---|---|---|---|---|---|---|---|---|---|
| | Voltage (V) | Frequency (Hz) | Sealed | Closing | Opening | Closing | Opening | Opening | Closing |
| PAK-6JC | 100 | 50 | 0.56 | 5~32 | 4~33 | 5~23 | 4~33 | 4~22 | 5~33 |
| | 100-110 | 60 | 0.58 | 6~25 | 4~33 | 6~25 | 4~33 | 4~22 | 5~33 |
| PAK-11J<br>PAK-12J | 100 | 50 | 0.33 | 6~25 | 4~33 | 6~25 | 4~33 | 4~22 | 5~33 |
| | 100-110 | 60 | 0.34 | 6~25 | 4~33 | 6~25 | 4~33 | 4~22 | 5~33 |
| PAK-20J | 100 | 50 | 0.33 | 6~25 | 4~33 | 6~25 | 4~33 | 4~22 | 5~33 |
| | 100-110 | 60 | 0.34 | 6~25 | 4~33 | 6~25 | 4~33 | 4~22 | 5~33 |
| PAK-21J | 100 | 50 | 0.33 | 6~25 | 4~33 | 10~26 | 4~33 | 8~25 | 5~33 |
| | 100-110 | 60 | 0.34 | 6~25 | 4~33 | 11~28 | 4~33 | 8~25 | 5~33 |
| PAK-26J<br>PAK-35J<br>PAK-50J | 100 | 50 | 0.38 | 10~26 | 4~33 | 8~30 | 2~33 | 5~20 | 8~33 |
| | 100-110 | 60 | 0.39 | 11~28 | 4~33 | 8~30 | 2~33 | 5~20 | 8~33 |
| PAK-50H | 100 | 50 | 0.32 | 8~30 | 4~33 | 8~30 | 2~33 | 5~20 | 8~33 |
| | 100-110 | 60 | 0.33 | 8~30 | 4~33 | 8~30 | 2~33 | 5~20 | 8~33 |
| PAK-65H<br>PAK-80H<br>PAK-95H | 100 | 50 | 0.33 | 5~30 | 4~33 | 6~25 | 4~33 | 4~22 | 8~33 |
| | 100-110 | 60 | 0.40 | 5~30 | 4~33 | 6~25 | 4~33 | 4~22 | 8~33 |
| PAK-100H<br>PAK-125H | 100 | 50 | 0.37 | 12~34 | 8~33 | 12~34 | 8~33 | 10~30 | 10~33 |
| | 100-110 | 60 | 0.40 | 12~34 | 8~33 | 12~34 | 8~33 | 10~30 | 10~33 |
| PAK-150H | 100 | 50 | 0.25 | 16~31 | 9~33 | 16~31 | 9~33 | 11~22 | 13~33 |
| | 100-110 | 60 | 0.28 | 16~35 | 9~33 | 16~35 | 9~33 | 11~25 | 13~33 |
| PAK-220H<br>PAK-270H | 100 | 50 | 0.25 | 16~31 | 9~33 | 16~31 | 9~33 | 11~22 | 13~33 |
| | 100-110 | 60 | 0.28 | 16~35 | 9~33 | 16~35 | 9~33 | 11~25 | 13~33 |
| PAK-300J<br>PAK-400J | 100-110 | 50/60 | 0.91 | 35~60 | 20~45 | 35~60 | 20~45 | 25~50 | 30~55 |
| PAK-600J<br>PAK-800J | 100-110 | 50/60 | 0.89 | 40~70 | 20~50 | 40~70 | 20~50 | 35~60 | 30~60 |

Notes. ①IEC 60947-4-1 stipulate that 85% of rated voltage be applied to coil for switching operation, with satisfactory performance.
②Minimum operating voltages indicate 20 operations with zero failure.
③60Hz is used for 220V input, in addition to operating voltage.
④Values measured at 20℃±15℃ ambient temperature.
⑤Select operating transformers with capacities of at least a third of the electromagnet inrush capacity.
⑥Please ask Togami sales offices or Togami distributors.
⑦It is the maximum. Please ask the lower limited level to Togami sales offices.

# Operation electromagnet ratings

2

For 220V

| Model \ Item | Operation coil ratings | | Operating voltage (V) | | Electromagnetic capacity (VA) | | Inrush current (A) | Exciting current (mA) | Loss (W) |
|---|---|---|---|---|---|---|---|---|---|
| | Voltage (V) | Frequency (Hz) | Minimum (less or equal) | Open (less or equal) | Inrush(max) | Sealed(max) | | | Sealed |
| PAK-6JC | 200 | 50 | 146 | 140 | 22 | 6.4 | 0.07~0.11 | 19~32 | 2.1~3.5 |
| | 200-220 | 60 | 155 | 140 | 24 | 6.9 | 0.07~0.11 | 18~31 | 2.3~3.7 |
| PAK-11J<br>PAK-12J | 200 | 50 | 145 | 140 | 64 | 11.0 | 0.26~0.32 | 33~55 | 2.2~3.7 |
| | 200-220 | 60 | 155 | 140 | 73 | 11.0 | 0.26~0.33 | 31~51 | 2.2~3.7 |
| PAK-20J | 200 | 50 | 145 | 140 | 64 | 11.0 | 0.26~0.32 | 33~55 | 2.2~3.7 |
| | 200-220 | 60 | 155 | 140 | 73 | 11.0 | 0.26~0.33 | 31~51 | 2.2~3.7 |
| PAK-21J | 200 | 50 | 145 | 140 | 64 | 11.0 | 0.26~0.32 | 33~55 | 2.2~3.7 |
| | 200-220 | 60 | 155 | 140 | 73 | 11.0 | 0.26~0.33 | 31~51 | 2.2~3.7 |
| PAK-26J<br>PAK-35J<br>PAK-50J | 200 | 50 | 153 | 140 | 112 | 17.2 | 0.48~0.53 | 51~86 | 3.9~6.7 |
| | 200-220 | 60 | 160 | 140 | 117 | 17.9 | 0.48~0.53 | 48~81 | 4.2~7.0 |
| PAK-50H | 200 | 50 | 163 | 130 | 186 | 27 | 0.54~0.93 | 77~132 | 4.7~8.5 |
| | 200-220 | 60 | 163 | 130 | 196 | 27 | 0.53~0.89 | 70~120 | 5~9.0 |
| PAK-65H<br>PAK-80H<br>PAK-95H | 200 | 50 | 163 | 125 | 250 | 30 | 0.78~1.30 | 88~148 | 6.4~9.1 |
| | 200-220 | 60 | 163 | 125 | 265 | 29 | 0.75~1.25 | 80~132 | 7.0~10.0 |
| PAK-100H<br>PAK-125H | 200 | 50 | 165 | 130 | 470 | 43 | 1.61~2.35 | 148~215 | 10~16.5 |
| | 200-220 | 60 | 163 | 130 | 490 | 44 | 1.53~2.23 | 136~200 | 11~18.5 |
| PAK-150H | 200 | 50 | 159 | 120 | 682 | 64 | 2.93~3.41 | 190~320 | 9.5~17.5 |
| | 200-220 | 60 | 159 | 120 | 726 | 61 | 2.58~3.30 | 140~277 | 8.1~19 |
| PAK-220H<br>PAK-270H | 200 | 50 | 159 | 120 | 682 | 64 | 2.93~3.41 | 190~320 | 9.5~17.5 |
| | 200-220 | 60 | 159 | 120 | 726 | 61 | 2.58~3.30 | 140~277 | 8.1~19 |
| PAK-300J<br>PAK-400J | 200-220 | 50/60 | 150 | 140 | 1537 | 8.9 | −⑥ | 41(max)⑦ | 7.4(max)⑦ |
| PAK-600J<br>PAK-800J | 200-220 | 50/60 | 150 | 140 | 1735 | 12.1 | −⑥ | 52(max)⑦ | 11.0(max)⑦ |

| Model \ Item | Operation coil ratings | | Power factor | Main contact operating time (ms) | | Auxiliary NO operating time (ms) | | Auxiliary NC operating time (ms) | |
|---|---|---|---|---|---|---|---|---|---|
| | Voltage (V) | Frequency (Hz) | Sealed | Closing | Opening | Closing | Opening | Opening | Closing |
| PAK-6JC | 200 | 50 | 0.56 | 5~32 | 4~33 | 5~23 | 4~33 | 4~22 | 5~33 |
| | 200-220 | 60 | 0.58 | 6~25 | 4~33 | 6~25 | 4~33 | 4~22 | 5~33 |
| PAK-11J<br>PAK-12J | 200 | 50 | 0.33 | 6~25 | 4~33 | 6~25 | 4~33 | 4~22 | 5~33 |
| | 200-220 | 60 | 0.34 | 6~25 | 4~33 | 6~25 | 4~33 | 4~22 | 5~33 |
| PAK-20J | 200 | 50 | 0.33 | 6~25 | 4~33 | 6~25 | 4~33 | 4~22 | 5~33 |
| | 200-220 | 60 | 0.34 | 6~25 | 4~33 | 6~25 | 4~33 | 4~22 | 5~33 |
| PAK-21J | 200 | 50 | 0.33 | 6~25 | 4~33 | 10~26 | 4~33 | 8~25 | 5~33 |
| | 200-220 | 60 | 0.34 | 6~25 | 4~33 | 11~28 | 4~33 | 8~25 | 5~33 |
| PAK-26J<br>PAK-35J<br>PAK-50J | 200 | 50 | 0.38 | 10~26 | 4~33 | 8~30 | 2~33 | 5~20 | 8~33 |
| | 200-220 | 60 | 0.39 | 11~28 | 4~33 | 8~30 | 2~33 | 5~20 | 8~33 |
| PAK-50H | 200 | 50 | 0.32 | 8~30 | 4~33 | 8~30 | 2~33 | 5~20 | 8~33 |
| | 200-220 | 60 | 0.33 | 8~30 | 4~33 | 8~30 | 2~33 | 5~20 | 8~33 |
| PAK-65H<br>PAK-80H<br>PAK-95H | 200 | 50 | 0.33 | 5~30 | 4~33 | 6~25 | 4~33 | 4~22 | 8~33 |
| | 200-220 | 60 | 0.40 | 5~30 | 4~33 | 6~25 | 4~33 | 4~22 | 8~33 |
| PAK-100H<br>PAK-125H | 200 | 50 | 0.37 | 12~34 | 8~33 | 12~34 | 8~33 | 10~30 | 10~33 |
| | 200-220 | 60 | 0.40 | 12~34 | 8~33 | 12~34 | 8~33 | 10~30 | 10~33 |
| PAK-150H | 200 | 50 | 0.25 | 16~31 | 9~33 | 16~31 | 9~33 | 11~22 | 13~33 |
| | 200-220 | 60 | 0.28 | 16~35 | 9~33 | 16~35 | 9~33 | 11~25 | 13~33 |
| PAK-220H<br>PAK-270H | 200 | 50 | 0.25 | 16~31 | 9~33 | 16~31 | 9~33 | 11~22 | 13~33 |
| | 200-220 | 60 | 0.28 | 16~35 | 9~33 | 16~35 | 9~33 | 11~25 | 13~33 |
| PAK-300J<br>PAK-400J | 200-220 | 50/60 | 0.91 | 35~60 | 20~45 | 35~60 | 20~45 | 25~50 | 30~55 |
| PAK-600J<br>PAK-800J | 200-220 | 50/60 | 0.89 | 40~70 | 20~50 | 40~70 | 20~50 | 35~60 | 30~60 |

Notes. ①IEC 60947-4-1 stipulate that 85% of rated voltage be applied to coil for switching operation, with satisfactory performance.
②Minimum operating voltages indicate 20 operations with zero failure.
③60Hz is used for 220V input, in addition to operating voltage.
④Values measured at 20℃±15℃ ambient temperature.
⑤Select operating transformers with capacities of at least a third of the electromagnet inrush capacity.
⑥Please ask Togami sales offices or Togami distributors.
⑦It is the maximum. Please ask the lower limited level to Togami sales offices.

## Application of thermal overload relay for motors

| Motor output capacity (kW) | 240V 3-phase motor(4-pole) | | | 440V 3-phase motor(4-pole) | | |
|---|---|---|---|---|---|---|
| | Magnetic starter | Thermal overload relay | | Magnetic starter | Thermal overload relay | |
| | | Model | Rated current(A) | | Model | Rated current(A) |
| 0.1 | 6JC | TJ-18JA<br>TJ-18JA-3<br>GTJ-18JA | 0.7 | 6JC | TJ-18JA<br>TJ-18JA-3<br>GTJ-18JA | 0.35 |
| 0.2 | | | 1.2 | | | 0.7 |
| 0.4 | | | 2.3 | | | 1.2 |
| 0.75 | | | 3.6 | | | 1.8 |
| 1.1 | | | 5 | | | 2.5 |
| 1.5 | | | 6.7 | | | 3 |
| 2.2 | | | 9.2 | | | 4.6 |
| 2.5 | 11J | TJ-18<br>TJ-18-3<br>GTJ-18 | 11 | | | 5.5 |
| 2.7 | | | 11 | | | 6 |
| 3.7 | | | 15 | | | 7.5 |
| 4 | 12J | | 18 | | | 7.5 |
| 4.5 | 20J<br>21J | | 18 | 11J | TJ-18<br>TJ-18-3<br>GTJ-18 | 9.5 |
| 5.5 | | | 22 | 12J | | 11 |
| 7.5 | | | 26 | 20J<br>21J | | 15 |
| 10 | 26J | TJ-35<br>TJ-35-3<br>GTJ-35 | 35 | | | — |
| 11 | 35J | | 42 | | | 22 |
| 15 | | | 56 | 26J | TJ-35<br>TJ-35-3<br>GTJ-35 | 30 |
| 18.5 | 50J | | 65 | | | 34 |
| | 50H | TJ-50<br>TJ-50-3<br>GTJ-50 | 65 | | | — |
| 20 | 65H | | 70 | | | 35 |
| 22 | | | 80 | 35J | | 39 |
| 25 | 80H | | 90 | | | 42 |
| 26 | 95H | | — | | | 45 |
| 27 | | | 105 | 50J | | 48 |
| 30 | 100H | TJ-125<br>TJ-125-3<br>GTJ-125 | 105 | | | 62 |
| | | | | 50H | TJ-50<br>TJ-50-3<br>GTJ-50 | 62 |
| 37 | | | 130 | 65H | | 68 |
| 40 | 125H | | 130 | 80H | | 68 |
| 45 | | | 160 | | | 80 |
| 55 | 150H | | 180 | 95H | | 105 |
| | | | | 100H | TJ-125<br>TJ-125-3<br>GTJ-125 | |
| 60 | | | 200 | 125H | | 125 |
| 75 | 220H | TJ-220<br>TJ-220-3<br>GTJ-220 | 240(240) | 150H | | 130 |
| 80 | | | 275 | 220H | TJ-220<br>TJ-220-3<br>GTJ-220 | 130 |
| 90 | 270H | | 310 | | | 160 |
| | 300J | T-400<br>GT-400 | 380(300)③ | | | |
| 110 | 400J | | 380(300)③ | 270H | | 220 |
| 115 | | | 400 | | | 230 |
| 132 | 600J | T-600<br>GT-600 | 500(500)③ | | | 270 |
| 150 | | | | 300J | T-400<br>GT-400 | 240(300)③ |
| 160 | | | 600 | 400J | | — |
| 200 | — | — | — | | | 380(300)③ |
| 220 | | | | 600J | T-600<br>GT-600 | 380(380)③ |
| 250 | | | | | | — |
| 300 | | | | | | 500(500)③ |

Notes. ①Load current will be different for 3-phase motors with other than four poles, and for non-standard motors. Selected the rated current appropriate for each motor in this case.
②If the same rated current is not available, select the closest current and use the adjusting dial to match it to the rated motor current.
③Rated current in parentheses indicates for GT-400 and GT-600 models.

2

## Performance

| Model | Rated operating voltage (V) | Rated operating current (A) | Closing & breaking current (A) | | Switching frequency (ops/hour) | Life (×10⁶ ops) | | Category |
|---|---|---|---|---|---|---|---|---|
| | | | Closing | Breaking | | Mechanical | Electrical | |
| PAK —6JC | 240 | 8.7 | 87 | 69.6 | 1,200 | 2.5 | 0.5 | AC-3 |
| | 440 | 7.9 | 79 | 63.2 | | | | |
| PAK —11J | 240 | 13.5 | 135 | 108 | 1,200 | 5 | 1 | |
| | 440 | 9.5 | 95 | 76 | | | | |
| PAK —12J | 240 | 15 | 150 | 120 | 1,200 | 5 | 1 | |
| | 440 | 11.5 | 115 | 92 | | | | |
| PAK —20J | 240 | 27 | 270 | 216 | 1,200 | 5 | 1 | |
| | 440 | 22 | 220 | 176 | | | | |
| PAK —21J | 240 | 27 | 270 | 216 | 1,200 | 5 | 1 | |
| | 440 | 22 | 220 | 176 | | | | |
| PAK —26J | 240 | 35 | 350 | 280 | 1,200 | 5 | 1 | |
| | 440 | 35 | 350 | 280 | | | | |
| PAK —35J | 240 | 52 | 520 | 416 | 1,200 | 5 | 1 | |
| | 440 | 45 | 450 | 360 | | | | |
| PAK —50J | 240 | 65 | 650 | 520 | 1,200 | 5 | 0.5 | |
| | 440 | 62 | 620 | 496 | | | | |
| PAK —50H | 240 | 65 | 650 | 520 | 1,200 | 5 | 1 | |
| | 440 | 62 | 620 | 496 | | | | |
| PAK —65H | 240 | 80 | 800 | 640 | 1,200 | 5 | 1 | |
| | 440 | 75 | 750 | 600 | | | | |
| PAK —80H | 240 | 90 | 900 | 720 | 1,200 | 5 | 1 | |
| | 440 | 90 | 900 | 720 | | | | |
| PAK —95H | 240 | 110 | 1,100 | 880 | 1,200 | 5 | 1 | |
| | 440 | 110 | 1,100 | 880 | | | | |
| PAK —100H | 240 | 125 | 1,250 | 1,000 | 1,200 | 5 | 1 | |
| | 440 | 110 | 1,100 | 880 | | | | |
| PAK —125H | 240 | 150 | 1,500 | 1,200 | 1,200 | 5 | 1 | |
| | 440 | 125 | 1,250 | 1,000 | | | | |
| PAK —150H | 240 | 200 | 2,000 | 1,600 | 1,200 | 5 | 1 | |
| | 440 | 150 | 1,500 | 1,200 | | | | |
| PAK —220H | 240 | 275 | 2,750 | 2,200 | 1,200 | 5 | 1 | |
| | 440 | 180 | 1,800 | 1,440 | | | | |
| PAK —270H | 240 | 310 | 3,100 | 2,480 | 1,200 | 5 | 0.5 | |
| | 440 | 265 | 2,650 | 2,120 | | | | |
| PAK —300J | 220 | 300 | 3,000 | 2,400 | 1,200 | 5 | 0.5 | |
| | 440 | 300 | 3,000 | 2,400 | | | | |
| PAK —400J | 220 | 400 | 4,000 | 3,200 | 1,200 | 5 | 0.5 | |
| | 440 | 400 | 4,000 | 3,200 | | | | |
| PAK —600J | 220 | 600 | 6,000 | 4,800 | 1,200 | 5 | 0.5 | |
| | 440 | 600 | 6,000 | 4,800 | | | | |
| PAK —800J | 220 | 800 | 3,200 | 3,200 | 1,200 | 1 | 0.1 | AC-2 |
| | 440 | 800 | 3,200 | 3,200 | | | | |

●Closing and breaking current
The number of operations for closing is 50 times, and for breaking is 50 times.

## AC-3 Electrical life (contact durability) characteristics

### ■ AC240V 3-phase AC-3-class

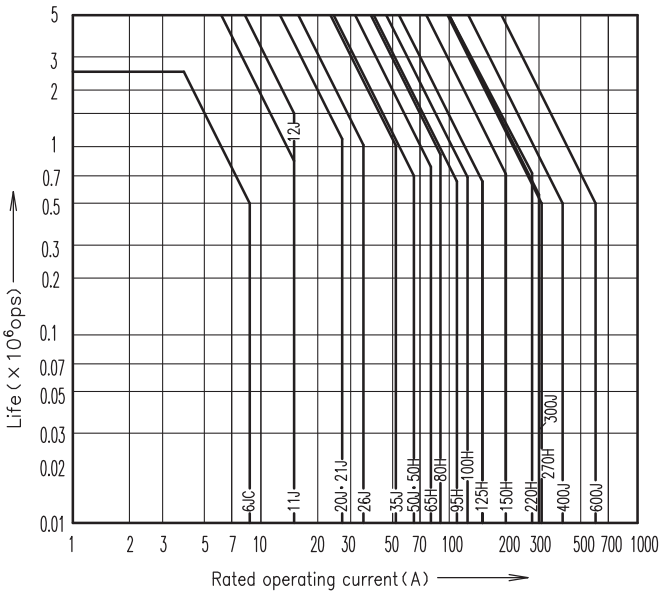


### ■ AC440V 3-phase AC-3-class

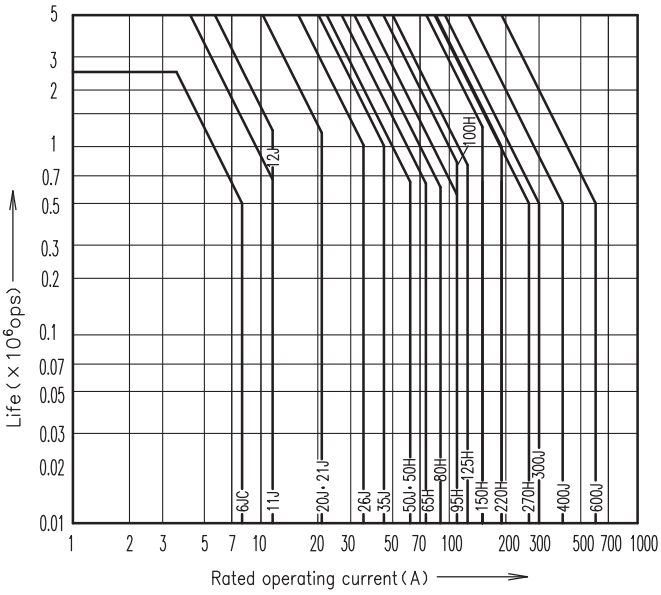


## AC-1 Electrical life (contact durability) characteristics

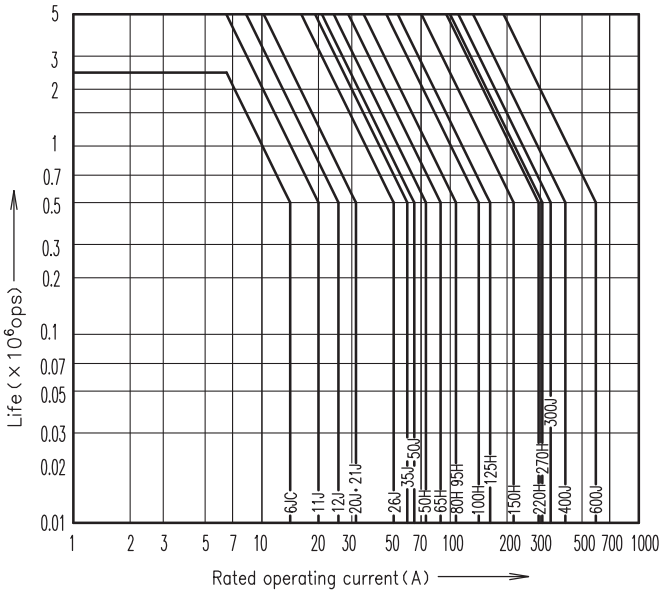

# Test condition and performance indication (Reference)



## Test condition and test method

| Test item | Test condition (Main circuit energization condition) | Test methods |
|---|---|---|
| Closed circuit breaking | Motor rated operational voltage × 1.05 times<br>Motor full-load current × 10 times<br>Power factor : 100A or less → 0.45<br>Over 100A → 0.35 | 110% impression of rated control power-supply voltage × 25 times<br>+ 85% impression of rated control power-supply voltage ×25 times |
| Loop and breaking current test | Motor rated operational voltage × 1.05 times<br>Motor full-load current × 8 times<br>Power factor : 100A or less → 0.45<br>Over 100A → 0.35 | Following loop current test, 100% impression of rated control power-supply voltage × 50 times making/breaking |
| Electrical life test | 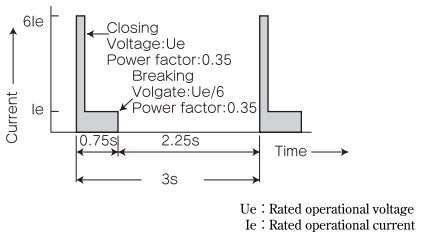 <br>Notes.At 25% duty cycle and 1000 times/hour open/close frequency | Impressing 100% voltage of rated control power voltage, switching at rated frequency under the left condition, and conforming switching without change of contacts. |
| Mechanical life test | No motor load. | Mechanical life<br>6JC : $25\times10^6$ times<br>11J～600J : $50\times10^6$ times<br>800J : $10\times10^6$ times<br>Swithing frq.<br>6JC～800J : 1200 times/hour |

Note. The above test method comply with JIS AC-3

## Performance indication

AC — 3 · 1 · 0 — 0

| Classification by loop current and breaking curent | | |
|---|---|---|
| Class | Multiple for rated operational current | |
| | Make | Break |
| AC-1 | 1.5 | 1.5 |
| AC-2 | 10 | 8 |
| AC-3 | 12 | 10 |

| Number by switching frequency | | |
|---|---|---|
| Number | Switching frequency (times/hour) | Energization rate |
| 0 | 1,800 | 15 |
| 1 | 1,200 | 25 |
| 2 | 600 | 40 |
| 3 | 300 | 40 |
| 4 | 150 | 60 |
| 5 | 30 | 60 |

| Classification by life | | |
|---|---|---|
| Class | Mechanical (more than $1\times10^4$ ops) | Electrical (more than $1\times10^4$ ops) |
| 0 | 1,000 | 100 |
| 1 | 500 | 50 |
| 2 | 250 | 25 |
| 3 | 100 | 10 |
| 4 | 25 | 5 |
| 5 | 5 | 1 |

Notes. 0 - 0
Electrical life
Mechanical life

# Application for motor



## Contact configuration of direct-online starting

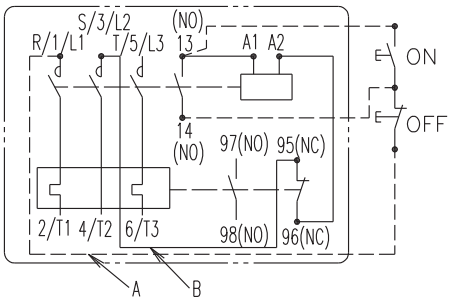

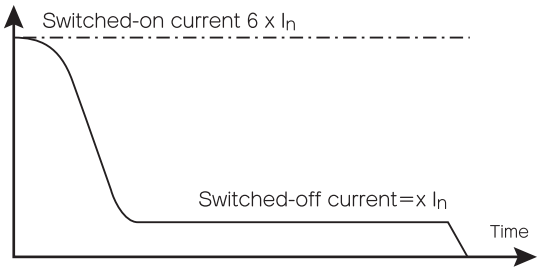


## Application for direct-online starting (AC-3) in consideration of electrical life

| Main circuit voltage | Motor | | 1×10⁶ ops | 2×10⁶ ops | 3×10⁶ ops | 4×10⁶ ops | 5×10⁶ ops |
|---|---|---|---|---|---|---|---|
| | Capacity〔kW〕 | Current〔A〕 | | | | | |
| 200～240V | 0.75 | 3.6 | 6JC | 6JC | 11J | 11J | 11J |
| | 1.5 | 6.7 | 6JC | 11J | 11J | 11J | 11J |
| | 2.2 | 9.2 | 6JC | 11J | 20J・21J | 20J・21J | 20J・21J |
| | 3.7 | 15 | 11J | 20J・21J | 20J・21J | 26J | 26J |
| | 5.5 | 22 | 20J・21J | 26J | 35J | 35J | 35J |
| | 7.5 | 26 | 20J・21J | 35J | 35J | 35J | 50H |
| | 11 | 42 | 35J | 50H | 65H | 80H | 95H |
| | 15 | 56 | 35J | 65H | 95H | 100H | 125H |
| | 18.5 | 65 | 50J | 95H | 100H | 125H | 125H |
| | 22 | 80 | 65H | 100H | 125H | 150H | 150H |
| | 30 | 105 | 100H | 125H | 150H | 220H | 220H |
| | 37 | 130 | 100H | 150H | 220H | 220H | 600J |
| | 45 | 160 | 125H | 220H | 400J | 600J | 600J |
| | 55 | 180 | 150H | 220H | 600J | 600J | 600J |
| | 75 | 240 | 220H | 600J | 600J | — | — |
| | 110 | 380 | 400J | — | — | — | — |
| 380～440V | 1.5 | 3 | 6JC | 6JC | 6JC | 11J | 11J |
| | 2.2 | 4.6 | 6JC | 11J | 11J | 11J | 12J |
| | 3.7 | 7.5 | 6JC | 12J | 20J・21J | 20J・21J | 20J・21J |
| | 5.5 | 11 | 12J | 20J・21J | 20J・21J | 20J・21J | 26J |
| | 7.5 | 15 | 20J・21J | 20J・21J | 26J | 26J | 26J |
| | 11 | 22 | 20J・21J | 26J | 35 | 35J | 50H |
| | 15 | 30 | 26J | 35J | 50H | 50H | 65H |
| | 18.5 | 34 | 26J | 50H | 50H | 65H | 80H |
| | 22 | 39 | 35J | 50H | 65H | 80H | 80H |
| | 30 | 62 | 50J | 80H | 95H | 125H | 150H |
| | 37 | 68 | 65H | 95H | 125H | 150H | 220H |
| | 45 | 80 | 80H | 125H | 150H | 220H | 220H |
| | 55 | 105 | 95H | 150H | 270H | 300J | 400J |
| | 75 | 130 | 150H | 270H | 400J | 400J | 600J |
| | 90 | 160 | 220H | 400J | 400J | 600J | 600J |
| | 110 | 220 | 270H | 600J | 600J | — | — |
| | 132 | 270 | 270H | 600J | — | — | — |
| | 160 | 300 | 400J | — | — | — | — |
| | 220 | 380 | 600J | — | — | — | — |

2

## Direct-online starting and star-delta starting

| Starting method | Direct-online starting | Star-delta starting |
|---|---|---|
| Figure | MC : Magnetic contactor<br>IN : Full-load current of motor<br>IST : Direct-online starting current of motor<br> 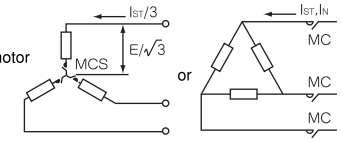 | 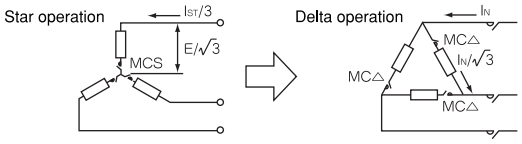 |
| Overview | • It is starting method that directly applies rated voltage to motor by magnetic contactor.<br>• Because of large starting current, AC-3 magnetic contactors that have an ability to close current 10 times larger than full load current of the motor and break current 8 times larger than that, shall be applied. | • When you put MSC, it starts with each winding (⅄) added the 1/√3 of line voltage. After speed-up, it opens MSC and put MC△, then make winding into △ and starts on full voltage operation. |
| Current characteristic | • Starting current is 5~6 times larger than full-load current of motor. | • Starting current is 1/3 of when motor rated voltage is impressed. |
| Torque characteristic | • Starting torque is large and not controlled. | • Starting torque is 1/3 of when motor rated voltage is impressed. |
| Cost | • Cheapest | • Cheaper |

## Application for inching and plugging operation

For inching and plugging operation use the following table for selection.
The table indicates applications for approximate electrical lives of 100,000, 250,000 and 500,000 operational. Electrical life calculations are based on a motor starting current six times the full load current.

●Appllicable motors

3-phase squirrel-cage induction motor

3-phase wound rotor induction motor

●Switching frequency

PAK- 6JC~ 50J : 600 operations／hour

PAK- 50H~ 95H : 600 〃

PAK- 100H~270H, PAK- 300J~ 600J : 300 〃

Units kW

| Voltage / Inching factor / Electrical life (ops) / Frame | 200 to 240V circuits | | | | | | 380 to 440V circuits | | | | | |
|---|---|---|---|---|---|---|---|---|---|---|---|---|
| Inching factor | 25 % | | | 50 % | | | 25 % | | | 50 % | | |
| Electrical life (ops) | 100,000 | 250,000 | 500,000 | 100,000 | 250,000 | 500,000 | 100,000 | 250,000 | 500,000 | 100,000 | 250,000 | 500,000 |
| 6JC | 1.1 | 0.4 | 0.4 | 0.4 | 0.2 | 0.2 | 1.5 | 1.1 | 0.4 | 1.1 | 0.4 | 0.2 |
| 11J | 2.2 | 1.5 | 0.75 | 1.5 | 0.75 | 0.4 | 3 | 1.5 | 1.1 | 2.2 | 1.5 | 0.75 |
| 12J | 2.7 | 1.5 | 1.1 | 1.5 | 1.1 | 0.75 | 4 | 2.2 | 1.5 | 2.7 | 1.5 | 1.1 |
| 20J | 3 | 2.2 | 1.1 | 2.2 | 1.5 | 0.75 | 4.5 | 4 | 2.2 | 4 | 2.2 | 1.5 |
| 21J | 4 | 2.7 | 1.5 | 2.7 | 1.5 | 1.1 | 7.5 | 4.5 | 2.5 | 5.5 | 2.5 | 2.2 |
| 26J | 5.5 | 3.7 | 2.2 | 4 | 2.7 | 1.5 | 11 | 7.5 | 4.5 | 7.5 | 4.5 | 3.7 |
| 35J | 7.5 | 4.5 | 3 | 5.5 | 3 | 2.2 | 15 | 11 | 7.5 | 11 | 7.5 | 4.5 |
| 50J | 11 | 7.5 | 3 | 7.5 | 4.5 | 2.2 | 22 | 15 | 7.5 | 15 | 11 | 4.5 |
| 50H | 11 | 7.5 | 4 | 7.5 | 4.5 | 2.5 | 25 | 15 | 11 | 15 | 11 | 7.5 |
| 65H | 15 | 11 | 7.5 | 11 | 5.5 | 4.5 | 30 | 25 | 15 | 19 | 15 | 11 |
| 80H | 19 | 15 | 11 | 15 | 11 | 7.5 | 37 | 30 | 22 | 22 | 19 | 15 |
| 95H | 25 | 19 | 15 | 19 | 15 | 11 | 45 | 37 | 25 | 37 | 25 | 19 |
| 100H | 25 | 19 | 15 | 19 | 15 | 11 | 45 | 37 | 25 | 37 | 25 | 19 |
| 125H | 30 | 22 | 19 | 22 | 19 | 15 | 55 | 40 | 30 | 40 | 30 | 22 |
| 150H | 40 | 25 | 22 | 25 | 22 | 19 | 75 | 60 | 40 | 60 | 40 | 30 |
| 220H | 55 | 37 | 30 | 37 | 30 | 25 | 95 | 75 | 55 | 75 | 55 | 37 |
| 270H | 60 | 45 | 37 | 45 | 37 | 30 | 95 | 80 | 55 | 80 | 55 | 40 |
| 300J | 60 | 37 | 30 | 45 | 30 | 22 | 100 | 65 | 45 | 75 | 45 | 30 |
| 400J | 85 | 50 | 37 | 60 | 40 | 30 | 120 | 80 | 60 | 90 | 60 | 40 |
| 600J | 95 | 70 | 50 | 75 | 55 | 37 | 165 | 100 | 75 | 132 | 75 | 55 |

Note. $\text{Inching factor}(\%) = \dfrac{\text{inching count}}{\text{inching count} + \text{normal operation (AC-3) count}} \times 100\ (\%)$

## Sequence diagram of star-delta starters

### ●Circuits

We recommend a 3-contactor type with main magnetic contactor which isolates the motor from the power supply when operation is stopped.
When using a 2-contactor type, always install a breaker on the primary side, and use it to open the circuit and shut off voltage to the motor.



### Open transition

#### 3-contactor type

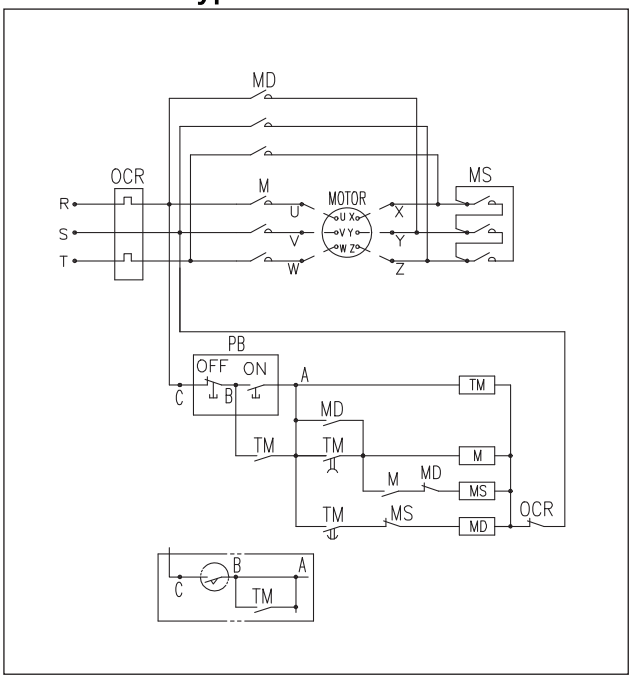


#### 2-contactor type

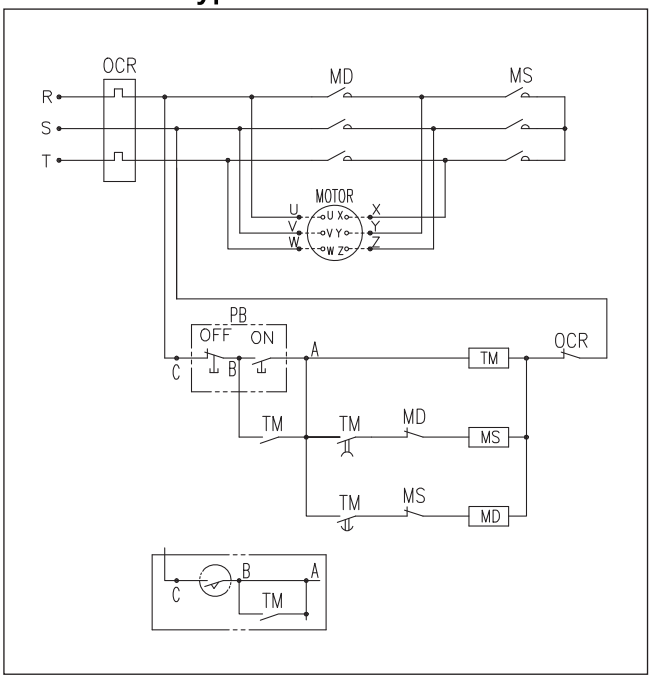


M ：Main magnetic contactor
MS：Star-side magnetic contactor
MD：Delta-side magnetic contactor
OCR：Thermal overload relay
TM ：Timer （Omron H3CR-G8EL or star-delta timer）
PB ：Pushbutton switch

### Connection diagram

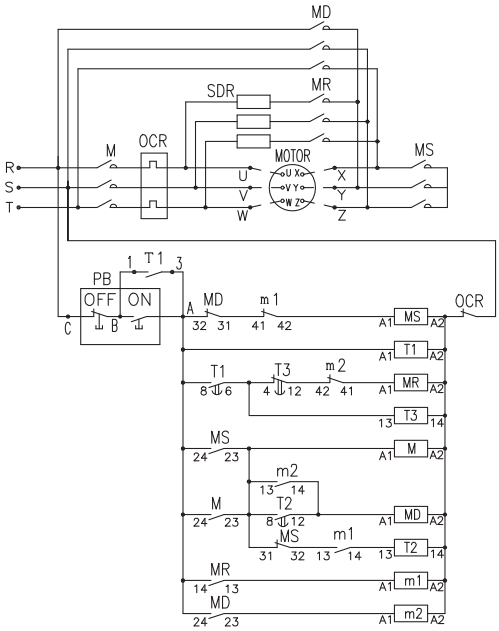

## Application for star-delta starters

＊SDH

| Model | | Rated capacity（kW） | | Contactor used | | Thermal overload relay | Timer used |
|---|---|---|---|---|---|---|---|
| Enclosed type | Open type | 200—220V | 380—440V | M D | M S | O C R | T M |
| SDH— 25HMC | SDH— 25HTC | 5.5 | 5.5 | PAK— 21J | PAK— 12J31 | TJ—35 | H3CR—G8EL |
| SDH— 35HMC | SDH— 35HTC | 7.5 | 11 | PAK— 26J | PAK— 21J | 〃 | 〃 |
| SDH— 50HMC | SDH— 50HTC | 11 | 19 | PAK— 35J | PAK— 26J | 〃 | 〃 |
| SDH— 80HMC | SDH— 80HTC | 19 | 26 | PAK— 50H | PAK— 35J | TJ—50 | 〃 |
| SDH—100HMC | SDH—100HTC | 26 | 37 | PAK— 65H | PAK— 50H | 〃 | 〃 |
| SDH—150HMC | SDH—150HTC | 40 | 55 | PAK—100H | PAK— 65H | TJ—125 | 〃 |
| SDH—220HMC | SDH—220HTC | 55 | 90 | PAK—150H | PAK—100H | 〃 | 〃 |
| SDH—300HMC | SDH—300HTC | 75 | 150 | PAK—220H | PAK—125H | TJ—35C+CT | 〃 |

Notes. Refer to P14 for the contrast table of the motor capacity and the rated current of thermal overload relay.

＊SDH3（with power cut-off contactor）

| Model | | Rated capacity（kW） | | Contactor used | | | Thermal overload relay | Timer used |
|---|---|---|---|---|---|---|---|---|
| Enclosed type | Open type | 200—220V | 380—440V | M | M D | M S | O C R | T M |
| SDH3— 25HMC | SDH3— 25HTC | 5.5 | 5.5 | PAK— 21J | | PAK— 21J | TJ—35 | H3CR—G8EL |
| SDH3— 35HMC | SDH3— 35HTC | 7.5 | 11 | PAK— 26J | PAK— 21J | 〃 | 〃 | 〃 |
| SDH3— 50HMC | SDH3— 50HTC | 11 | 19 | PAK— 35J | | 〃 | 〃 | 〃 |
| SDH3— 80HMC | SDH3— 80HTC | 19 | 26 | PAK— 50H | | PAK— 26J | TJ—50 | 〃 |
| SDH3—100HMC | SDH3—100HTC | 26 | 37 | PAK— 65H | | PAK— 35J | 〃 | 〃 |
| SDH3—150HMC | SDH3—150HTC | 40 | 55 | PAK—100H | | PAK— 50H | TJ—125 | 〃 |
| SDH3—220HMC | SDH3—220HTC | 55 | 90 | PAK—150H | | PAK— 65H | 〃 | 〃 |
| SDH3—300HMC | SDH3—300HTC | 75 | 150 | PAK—220H | | PAK—100H | TJ—35C+CT | 〃 |

Notes. Refer to P14 for the contrast table of the motor capacity and the rated current of thermal overload relay.

## Application for resistance load

### ●Normal application

When the magnetic starter or contactor is used for resistance load like electric heater or furnace, AC-1 is applied because it is not necessary to consider inrush current at starting.

| Frame | Single phase | | | | 3-phase | | | |
|---|---|---|---|---|---|---|---|---|
| | 110V | | 220V | | 220V | | 440V | |
| | Capacity〔kW〕 | Current〔A〕 | Capacity〔kW〕 | Current〔A〕 | Capacity〔kW〕 | Current〔A〕 | Capacity〔kW〕 | Current〔A〕 |
| 6JC | 1.7 | 15 | 3.3 | 15 | 5.7 | 15 | 11 | 15 |
| 11J | 2.2 | 20 | 4.4 | 20 | 7.6 | 20 | 15 | 20 |
| 12J | 2.9 | 26 | 5.7 | 26 | 9.9 | 26 | 20 | 26 |
| 20J・21J | 3.5 | 32 | 7 | 32 | 12 | 32 | 24 | 32 |
| 26J | 5.5 | 50 | 11 | 50 | 19 | 50 | 38 | 50 |
| 35J | 6.6 | 60 | 13 | 60 | 23 | 60 | 46 | 60 |
| 50J | 7.2 | 65 | 14 | 65 | 24 | 65 | 50 | 65 |
| 50H | 8.3 | 75 | 17 | 75 | 29 | 75 | 57 | 75 |
| 65H | 9.9 | 90 | 20 | 90 | 35 | 90 | 69 | 90 |
| 80H・95H | 12 | 110 | 24 | 110 | 42 | 110 | 84 | 110 |
| 100H | 17 | 150 | 33 | 150 | 57 | 150 | 114 | 150 |
| 125H | 19 | 170 | 37 | 170 | 64 | 170 | 130 | 170 |
| 150H | 24 | 220 | 48 | 220 | 83 | 220 | 168 | 220 |
| 220H | 30 | 275 | 61 | 275 | 106 | 275 | 210 | 275 |
| 270H | 34 | 310 | 68 | 310 | 118 | 310 | 236 | 310 |
| 300J | 39 | 350 | 77 | 350 | 133 | 350 | 267 | 350 |
| 400J | 46 | 420 | 92 | 420 | 159 | 420 | 320 | 420 |
| 600J | 66 | 600 | 132 | 600 | 229 | 600 | 457 | 600 |
| 800J | 88 | 800 | 176 | 800 | 305 | 800 | 610 | 800 |

Notes. ①In the case of electrical life 0.5 million ops.
②In the case of the standard value of AC-1 closed path or breaking current, please refer to P9.

### ●Parallel connection of terminal as for single phase resistance load

When magnetic contactor is used as for single phase resistance load, it is possible to increase the rated capacity if each terminal of 3 poles are connected in parallel.

2

## Application for capacitive load

Application for individual-use capacitors

| Frame | 3-phase capacity | | | | Single-phase capacity | | | |
|---|---|---|---|---|---|---|---|---|
| | 200 V | | 400 V | | 200 V | | 400 V | |
| | kvar | A | kvar | A | kvar | A | kvar | A |
| 6JC | 1.5 | 4.5 | 2.8 | 4 | 0.9 | 4.5 | 1.6 | 4 |
| 11J | 2.5 | 8 | 3.5 | 5 | 1.6 | 8 | 2 | 5 |
| 12J | 3 | 9 | 4.5 | 6.5 | 1.8 | 9 | 2.6 | 6.5 |
| 20J | 5 | 15 | 8 | 12 | 3 | 15 | 4.8 | 12 |
| 21J | 5 | 15 | 8 | 12 | 3 | 15 | 4.8 | 12 |
| 26J | 6 | 19 | 11 | 16 | 3.8 | 19 | 6.4 | 16 |
| 35J | 9 | 26 | 15 | 22 | 5.2 | 26 | 8.8 | 22 |
| 50J | 11 | 32 | 16 | 24 | 6.4 | 32 | 9.6 | 24 |
| 50H | 13 | 40 | 20 | 30 | 8 | 40 | 12 | 30 |
| 65H | 15 | 50 | 25 | 40 | 10 | 50 | 16 | 40 |
| 80H | 20 | 60 | 38 | 55 | 12 | 60 | 22 | 55 |
| 95H | 22 | 65 | 40 | 60 | 13 | 65 | 22 | 55 |
| 100H | 25 | 80 | 40 | 60 | 16 | 80 | 24 | 60 |
| 125H | 34 | 100 | 50 | 75 | 20 | 100 | 30 | 75 |
| 150H | 40 | 125 | 68 | 100 | 25 | 125 | 40 | 100 |
| 220H, 270H | 60 | 180 | 80 | 120 | 36 | 180 | 48 | 120 |
| 300J | 80 | 231 | 160 | 231 | 46 | 230 | 92 | 230 |
| 400J | 100 | 289 | 200 | 289 | 57 | 285 | 115 | 288 |
| 600J | 150 | 433 | 300 | 433 | 86 | 430 | 173 | 433 |

Notes. ①Applicable frequencies for above table are 50 and 60Hz.
②The peak inrush current at closing is below 20 times than the rated capacitor current（effective）.

●Circuits

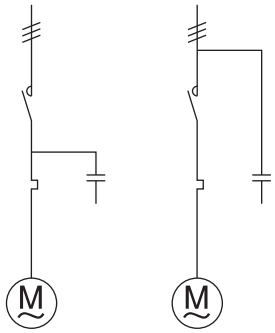

# Application for DC load

## Application for DC load

| Voltage (V) | Model | Rated current (A) | | | | | | |
|---|---|---|---|---|---|---|---|---|
| | | Resistance load | | Inductive load (DC motor) | | Inductive load (coil) | | |
| | | 2P | 3P | 2P | 3P | 1P | 2P | 3P |
| 48 | PAK-6JC PAK6JDCC | 6 | 6 | 6 | 6 | 2 | 3 | 6 |
| 110 | | 5 | 6 | 2.5 | 5 | 1 | 1.5 | 4 |
| 220 | | 2 | 4 | 0.8 | 2.5 | 0.15 | 0.5 | 1.5 |
| 48 | PAK-11J | 10 | 10 | 8 | 10 | 4 | 5 | 8 |
| 110 | | 8 | 10 | 4 | 8 | 1 | 2.5 | 5 |
| 220 | | 4 | 6 | 1.5 | 4 | 0.25 | 0.75 | 3 |
| 48 | PAK-12J | 13 | 13 | 10 | 13 | 5 | 6 | 12 |
| 110 | | 10 | 13 | 6 | 10 | 1.5 | 3 | 6 |
| 220 | | 6 | 9 | 2 | 6 | 0.3 | 1.2 | 4 |
| 48 | PAK-20J | 16 | 16 | 13 | 16 | 8 | 12 | 15 |
| 110 | | 13 | 16 | 8 | 16 | 2 | 5 | 12 |
| 220 | | 7 | 10 | 4 | 8 | 0.4 | 1.5 | 5 |
| 48 | PAK-21J | 20 | 20 | 16 | 20 | 9 | 13 | 20 |
| 110 | | 16 | 20 | 9 | 16 | 2.5 | 5 | 15 |
| 220 | | 8 | 12 | 3.5 | 9 | 0.5 | 2 | 6 |
| 48 | PAK-26J | 25 | 25 | 20 | 25 | 10 | 15 | 25 |
| 110 | | 20 | 25 | 10 | 20 | 3 | 6 | 15 |
| 220 | | 10 | 15 | 4 | 10 | 0.5 | 2 | 6 |
| 48 | PAK-35J | 35 | 35 | 25 | 35 | 15 | 20 | 35 |
| 110 | | 30 | 35 | 15 | 30 | 5 | 8 | 25 |
| 220 | | 15 | 24 | 6 | 12 | 1 | 2.5 | 8 |
| 48 | PAK-50H | 50 | 50 | 35 | 50 | 20 | 25 | 50 |
| 110 | | 40 | 50 | 24 | 40 | 8 | 10 | 30 |
| 220 | | 20 | 35 | 8 | 15 | 2 | 5 | 10 |
| 48 | PAK-65H | 65 | 65 | 50 | 65 | 25 | 30 | 65 |
| 110 | | 60 | 65 | 30 | 60 | 15 | 20 | 40 |
| 220 | | 30 | 55 | 15 | 30 | 5 | 10 | 20 |
| 48 | PAK-80H | 80 | 80 | 65 | 80 | 30 | 40 | 80 |
| 110 | | 70 | 80 | 40 | 80 | 20 | 30 | 60 |
| 220 | | 40 | 55 | 20 | 50 | 7 | 15 | 30 |
| 48 | PAK-100H | 100 | 100 | 80 | 100 | 40 | 50 | 100 |
| 110 | | 90 | 100 | 50 | 90 | 30 | 35 | 70 |
| 220 | | 50 | 65 | 40 | 60 | 10 | 20 | 40 |
| 48 | PAK-125H | 125 | 125 | 100 | 125 | 50 | 70 | 120 |
| 110 | | 120 | 125 | 80 | 120 | 40 | 50 | 90 |
| 220 | | 70 | 85 | 60 | 70 | 12 | 25 | 50 |
| 48 | PAK-150H | 150 | 150 | 125 | 150 | – | – | – |
| 110 | | 140 | 150 | 110 | 140 | – | – | – |
| 220 | | 80 | 100 | 70 | 80 | – | – | – |
| 48 | PAK-220H PAK-270H | 225 | 225 | 200 | 225 | – | – | – |
| 110 | | 200 | 225 | 150 | 200 | – | – | – |
| 220 | | 120 | 150 | 80 | 120 | – | – | – |
| 48 | PAK-300J | Please ask Togami sales offices or Togami distributors. | | | | | | |
| 110 | | | | | | | | |
| 220 | | | | | | | | |
| 48 | PAK-400J | | | | | | | |
| 110 | | | | | | | | |
| 220 | | | | | | | | |
| 48 | PAK-600J | | | | | | | |
| 110 | | | | | | | | |
| 220 | | | | | | | | |

Notes. ①Time constant of inductive load is;
for DC motor=15m sec.
for coil =100m sec.
②Electrical life shall be about $0.5\times10^{6}$.
③Breaking capacity is;
for resistance load and DC=more than 5times for rated current
=more than 1.2times for rated current

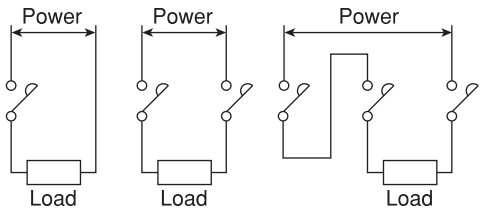

2

## Protection coordination

For direct on-line starting, magnetic starters have a switching capacity of ten times  the rated current, and but it cannot break a short circuit current. Thus it uses all together a characteristic of cooperative action with a fuse or a no-fuse breaker. If the protection coordination is not good, a burnout of contacting points or heaters of thermal relay will occur.

The heater which short-circuit current was applied that it will burn out with even a momentary over-current that flows before a breaker or a fuse makes a break action. On 5A or smaller rated models, the heater itself becomes a resistor to reduce the short circuit current and burnout will not always occur. The short circuit current is reduced for a heater with smaller capacity, so the breaking time is prolonged and short circuit current flows for a longer time. This may cause a damage to the bimetal plate by overheating.

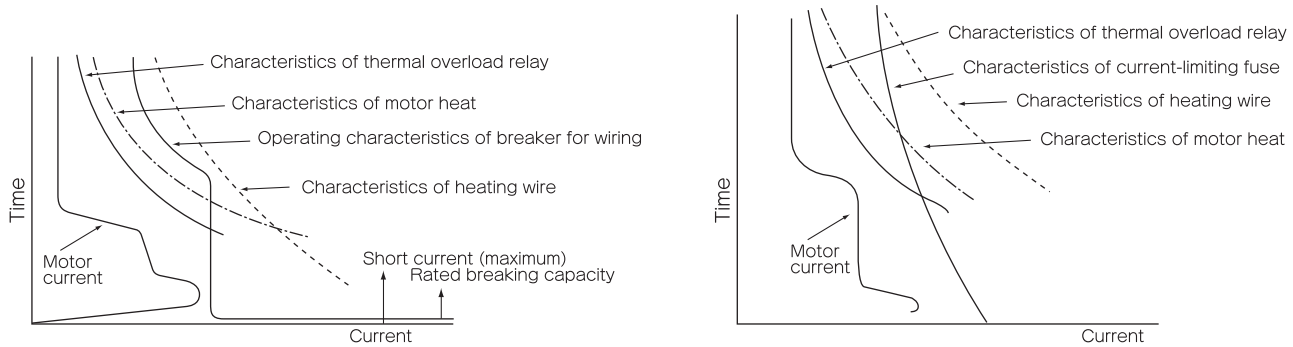


In use of breaker for wiring

In use of current-limiting fuse

Protective coordination characteristic curves of motor circuit

## Standard service conditions

| | |
|---|---|
| (1) Standard ambient temperature | Enclosed model 40℃ (max mean daily temperature 30℃ / max mean annual temperature 25℃)<br>Open model (to be used in control box) 55℃ |
| (2) Maximum ambient temperature | Open model 60℃ (mean daily temperature not to exceed 50℃) |
| (3) Minimum ambient temperature | −5℃ |
| (4) Ambient storage temperature | −20℃～70℃ |
| (5) Relative humidity | 45%～85%RH |
| (6) Altitude | 2,000m max. |
| (7) Vibration-resistant | 10～55Hz 2G |
| (8) Shock-resistant | 5G |
| (9) Atmosphere | Don't dew and freeze,and must not contain much dust,smoke, corrosive gas,flammable gas, vapor, and salt. |
| (10) Pollution degree | Please use magnetic contactors and starters in environment of lower than pollution degree 3.<br>Pollution degree3 : Conductive pollutant occurs.<br>Or<br>Pollutant of dry non-conductive occurs in normal condition. But<br>Pollutant of conductive occurs in dew condensation condition.<br>(IEC 60947-1) |

## Installation

●Direct mounting

(1) Select a well-ventilated location free of excessive dust and vibration.

(2) Install vertically on a solid surface as shown.
A maximum inclination of 30° is allowable. The power side of the line terminals should be on the top.

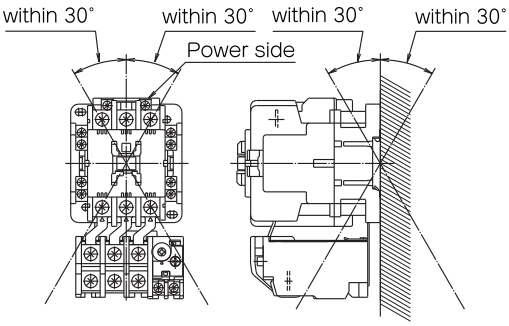

Standard Mounting Position

●DIN rail mounting

(1) Applicable rails
Mounts on 35-mm wide rails comforming to DIN, IEC and JIS C 2812. Rail shape and dimensions are as shown below.

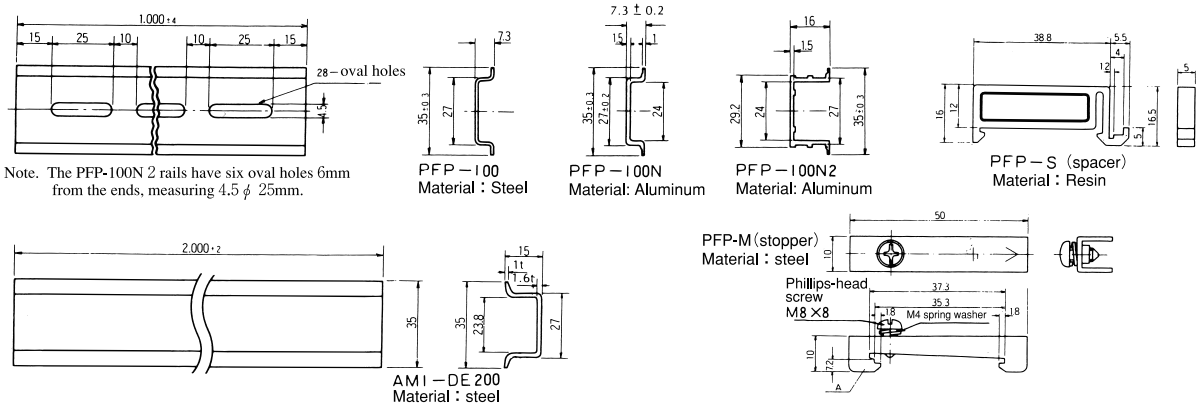


①Note. The PFP-100N2 rails have six oval holes 6mm from the ends, measuring 4.5 x 25 mm.

②Note. PFP-100 (steel) and AMI-DE200 (steel) cannot be used with the PAK-11J to 21J.

(2) Rail mounting screw pitch
When installing the rails, use the following screw pitch to assure sufficient mechanical strength.

| Frame / Rail height (mm) | 6JC<br>12J、11J<br>20J、21J、8JS | 26J<br>35J<br>50J | 50H-DN<br>65H-DN<br>80H-DN<br>95H-DN |
|---|---|---|---|
| 7.5 (7.3) | 250 | 200 | 200 |
| 15 , 16 | 500 | 500 | 500 |

## Mounting space

For mounting more than one magnetic starters in a row, make sure that the space between the units is more than the distance indicated in the table below. Also, be sure that the space between the starter and other earthed metallic items is more than the distance indicated below.

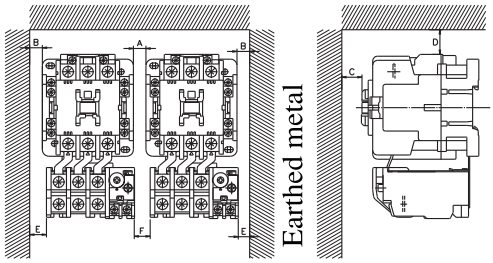


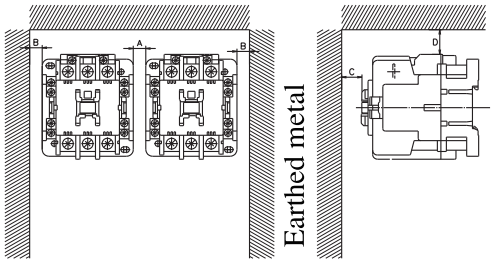


| Model \ Space (mm) | A | B | C | D | E | F |
|---|---|---|---|---|---|---|
| PAK-6JTC, 6JGTC | 5 | 5 | 5 | 10 | 5 | 5 |
| PAK-11JTC, 12JTC, 11JGTC, 12JGTC | 5 | 5 | 5 | 10 | 5 | 5 |
| PAK-20JTC～50JT, 20JGTC～50JGT | 5 | 5 | 5 | 10 | 5 | 5 |
| PAK-50HTC～95HT | 5 | 5 | 5 | 30 | – | – |
| PAK-100HTC, 125HTC | 5 | 5 | 5 | 40 | – | – |
| PAK-150HTC | 5 | 10 | 5 | 50 | – | – |
| PAK-220HTC, 270HT | – | – | 5 | 50 | 10 | 15 |
| PAK-300JT, 400JT | 10 | 10 | 1 | 30 | 10 | 10 |
| PAK-600JT | 10 | 10 | 1 | 50 | 10 | 10 |

Notes. ①The space indicates the distance from the largest part of the product.
②Dimension D for PAK-150HT, to 600JT is from the edge of the main circuit terminal.
③Also applies to magnetic starters with 3-heaters thermal overload relays.

| Model \ Space (mm) | A | B | C | D |
|---|---|---|---|---|
| PAK-6JC | 5 | 5 | 5 | 10 |
| PAK-11J, 12J | 5 | 5 | 5 | 10 |
| PAK-20J～50J | 5 | 5 | 5 | 10 |
| PAK-50H～95H | 5 | 5 | 5 | 30 |
| PAK-100H, 125H | 5 | 5 | 5 | 40 |
| PAK-150H | 5 | 10 | 5 | 50 |
| PAK-220H, 270HT | 20 | 20 | 5 | 50 |
| PAK-300J, 400J | 10 | 10 | 1 | 30 |
| PAK-600J, 800J | 10 | 10 | 1 | 50 |

Notes. ①The space indicates the distance from the largest part of the product.
②Dimension D for PAK-150H to 800J is from the edge of the main circuit terminal.

## Conforming wire size and tightening torque

Please follow installation instructions carefully for wiring. Incorrect installing of terminal screws will result accidents due to overheating of connecting points and disconnecting of wires.
Screws should be properly installed in accordance with the specified values given in the table below.

| Frame \ Item | | Screw size | | | | Conforming wire | | | Conforming crimp-type terminals | | | Tightening torque N·m{kgf·cm} | | | |
|---|---|---|---|---|---|---|---|---|---|---|---|---|---|---|---|
| | | Main circuit | | Control circuit | | Main circuit | | Control circuit | Main circuit | | Control circuit | Main circuit | | Control circuit | |
| | | Contactor | Thermal | | | Contactor | Thermal | | Contactor | Thermal | | Contactor | Thermal | | |
| J Series | PAK-6JC | M 3.5 | M 4 | ⑥ M3.5 | | φ1～1.6 0.5～2mm² | φ1～2 0.5～5.5mm² | φ1～1.6 0.5～2mm² | 1.25-3.5～2-3.5 | 1.25-4～5.5-4 | 1.25-3.5 ～ 2-3.5 | 0.8～1.2 {8～12} | 1.2～1.8 {12～18} | 0.8～1.2 {8～12} | |
| | PAK-11J | | | | | | | | | | | | | | |
| | PAK-12J | | | | | | | | | | | | | | |
| | PAK-20J | M 4 | | | | φ1～2 0.5～5.5mm² | | | 1.25-4～5.5-4 | | | 1.2～1.8 {12～18} | | | |
| | PAK-21J | | | | | | | | | | | | | | |
| | PAK-26J | M 5 | | | | φ1.6～3.2 1.25～14mm² | | | 1.25-5～14-5 | | | 2.4～3.5 {24～36} | | | |
| | PAK-35J | M 5 | | | | φ1.6～3.2 1.25～14mm² | | | 1.25-5～14-5 | | | | | | |
| | PAK-50J | | | | | | | | | | | | | | |
| H Series | PAK-50H | M 6 | | | | ⑤ 2～38mm² | | | ① 2-6～38-6S | | | 3.9～5.9 {40～60} | | | |
| | PAK-65H | M 6 | | | | ⑤ 2～38mm² | | | ① 2-6～38-6S | | | | | | |
| | PAK-80H | | | | | | | | | | | | | | |
| | PAK-95H | | | | | | | | | | | | | | |
| | PAK-100H | M 8 | | | | ⑤ 2～80mm² | | | ② 2-8～CB80-8 | | | 9.0～13.5 {92～138} | | | |
| | PAK-125H | | | | | | | | | | | | | | |
| | PAK-150H | | | | | | | | | | | | | | |
| | PAK-220H | M 10 | | | | 2～150mm²⑤ | | | 2-10～150-10 | | | 18.1～27 {185～275} | | | |
| | PAK-270H | | | | | | | | | | | | | | |
| J Series | PAK-300J | M 12 | | | | ⑤ 2～200mm² | | | 2-12～200-12 | | 1.25-3.5 ～ 2-3.5 1.25-4 ～ 2-4 | 35～45 {350～450} | | 0.8～1.0 {8～10} | |
| | PAK-400J | | | | | | | | | | | | | | |
| | PAK-600J | M 12 | | ③ M 4 | ④ M 3.5 | ⑤ 2～325mm² | | φ1.6 1.25～2mm² | 2-12～325-12 | | | | | M4 1.0～1.5 {10～15} | M3.5 0.8～1.0 {8～10} |
| | PAK-800J | M 16 | | | – | ⑤ 2～325mm² | | φ1～2 0.5～5.5mm² | 2-16～325-16 | | | | | | |

Notes. ① Standard 38-6 crimp-type terminal lug is too wide, and not suitable for the terminal. Please use 38-6S (Nichifu Terminal Industries Co., Ltd.) or 38-S6 (Japan Solderless Terminal Mfg. Co., Ltd.).
② Standard 80-8 crimp-type terminal lugs are too wide, and not suitable for the terminal. Please use CB-type terminal connectors for low-voltage switching devices (Nichifu Terminal Industries Co., Ltd.) or for molded case circuit breakers (Japan Solderless Terminal Mfg. Co., Ltd.).
③ Contactor side.
④ Thermal overload relay side.
⑤ Use crimp-type terminal connectors.
⑥ PAK-20J's auxiliary circuit (magnetic contactor) is the same as main circuit.

## Power supply voltage of the control circuit

The voltage and frequency of the operating circuit should be the same as the rated voltage and frequency of the operating coil. If the voltage is greater than 100% of the rated voltage of the coil, this will result various deterio rations for coil insulation and for mechanical and electrical performances.At the inrush time, if the power supply voltage is less than the minimum operating voltage of contactors, it may cause the coil barning out because of small coil impedance, contact chattering or contact welding.

## Application in the circuit exceeding AC380V

When using solderless terminals for the circuit exceeding AC380V, use of solderless terminals with insulation tube is recommended.

## Auxiliary contact terminal(NC)

When NC auxiliary contact terminal is inserted into the magnetic contactor, be sure to push the contactor rod insertion.(When the terminal falls out or inspection)

## Maintenance

- **Contact tips**

  The contact tips will discolor slightly and become irregular in using, but this will not affect their pertormance. Do not file the tips, as this will shorten their contact life. Contacts should be replaced when the thickness of the contact tips becomes half the size of new ones. All three phases should be replaced at the same time.

- **Core**

  To minimize hum level, contact surfaces of cores are polished to a high degree of flatness and coated with a corrosion-resistant finish. As will as being matched to the shading coil, movable core and fixed core. However, in long-term storage, dirt, iron filings, and rust through humidity on the core surfaces may cause core humming. So appropriate storage conditions are highly requested.

- **Do not lubricate**

  Abrasion of moving parts is very small. The switch is designed to operate with stable characteristics. Lubrication may cause the magnetic contactor to prevent its nomal operations. Please exercise caution, especially when used in oil-operated machinery.

## ＜Cautions＞

1.When a contact welding is occurred by causes indicated below, there would be the danger such as reckless driving of machines and abnormal heat of the heater. Please use with the commiserations for the safety supposing the failure of making and breaking operations by mechanical rocking or contact welding.
Moreover, the thermal overload relay cannot protect phenomena.
- · Making / Breaking current and operation under use over-spec.
- · Abnormal consumption of contact-tip and the life of contact-tip.
- · Secular variation.
- · Chattering of contact.
- · Instantaneous voltage drop of the power supply.

2.Do not use the contactor removing the cover.
There are dangers of the electric shock, the short-circuit and ets.

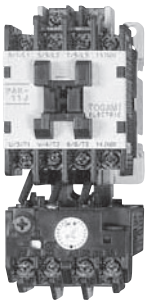

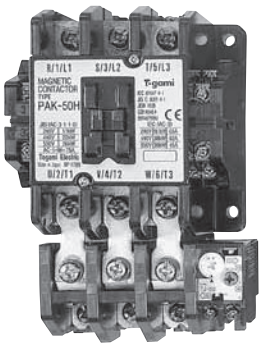

## Features

### ●Standard magnetic contactors & starters

・Pop open the cover for simple contact inspection.
・Can cope through DC 24V 10mA by the adoption of twin contact.
・Realited longer life of 1 million operations（11J～35J, 50H～270H）

### ●Magnetic starters with phase-failure protection thermal overload relays

Magnetic starters with phase-failure protection thermal overload relays are magnetic starters combined with an phase-failure protection thermal overload relay containing a differential amplifying mechanism. In addition to motor start/stop and protection from overload and locking, they also protect motors from phase-failure protection accidents.
The same as standard magnetic starters, this magnetic starter with phase-failure protection thermal overload relay is easy-to-handle and economical.

### ●Magnetic starters with 3-heaters thermal overload relays

It protects motor from burnout due to overload and phase-failure.

## Ratings, performance and specifications

| Item | Page |
|---|---|
| ●Rated capacity and operational current | 9, 10 |
| ●Application for standard motors | 14 |
| ●Characteristics and performance | 15 |
| ●Auxiliary contact ratings | 10 |
| ●Operating coil ratings | 11 |
| ●Conforming wire size and tightening torque | 27 |
| ●Thermal overload relays | 73 |

## Model explanation

### ●Standard magnetic contactors & starters

PAK — 20 JT 20 — A C

**Type**

PAK ···Non-reversing model

**Model**

| J | | H | |
|---|---|---|---|
| 6 | 300 | 50 | 270 |
| 11 | 400 | 65 | |
| 12 | 600 | 80 | |
| 20 | 800 | 95 | |
| 21 | | 100 | |
| 26 | | 125 | |
| 35 | | 150 | |
| 50 | | 220 | |

| J | H | Specifications |
|---|---|---|
| J | H | Magnetic contactor① (without enclosure) |
| JT | HT | Magnetic starter (without enclosure) |
| JM | HM | Magnetic starter (with enclosure) |
| JB | HB | Magnetic contactor (with enclosure) |

Note. ①Only PAK-6J accompanies "c" at the end of model name.

**Aux. contact configuration**

PAK-6JC, 11J
12J, 20J
Blank·····1NO
31·····1NC

PAK-21J
Blank·····1NO1NC
20·····2NO
02·····2NC

PAK-26J～270H
Blank·····2NO2NC

PAK-300, 400J
Blank·····3NO3NC

PAK-600, 800J
Blank·····4NO4NC

**Options ②**

A···Ammeter
D···Push button

Note. ②Only with enclosure

**Career mark**

Only magnetic starter
However, except for 50J, 95H, 270H 300J～600J models.

### ●Magnetic starters with phase-failure protection thermal overload relays

PAK — 20 JGT 20 — A C

**Type**

PAK ···Non-reversing model

**Model**

| J | | H | |
|---|---|---|---|
| 6 | 300 | 50 | 270 |
| 11 | 400 | 65 | |
| 12 | 600 | 80 | |
| 20 | | 95 | |
| 21 | | 100 | |
| 26 | | 125 | |
| 35 | | 150 | |
| 50 | | 220 | |

| J | H | Specifications |
|---|---|---|
| JGT | HGT | Magnetic Starter (without enclosure) |
| JGM | HGM | Magnetic Starter (with enclosure) |

**Auxiliary contact configuration**

PAK-6JC, 11J, 12J, 20J
Blank·····1NO
31·····1NC

PAK-21J
Blank·····1NO1NC
20·····2NO
02·····2NC

PAK-26J～270H
Blank·····2NO2NC

PAK-300, 400J
Blank·····3NO3NC

PAK-600J
Blank·····4NO4NC

**Options**

A···Ammeter
D···Push button

Note. Only with enclosure

**Career mark**

Except for 50J, 95H, 270H, 300J～600J models.

### ●Magnetic starters with 3-heaters thermal overload relays

PAK — 20 JT 20 — 3 A C

**Type**

PAK ···Non-reversing model

**Model**

| J | H |
|---|---|
| 6 | 50 |
| 11 | 65 |
| 12 | 80 |
| 20 | 95 |
| 21 | 100 |
| 26 | 125 |
| 35 | 150 |
| 50 | 220 |
| | 270 |

| J | H | Specifications |
|---|---|---|
| JT | HT | Magnetic starter (without enclosure) |
| JM | HM | Magnetic starter (with enclosure) |

**Auxiliary contact configuration**

PAK-6JC, 11J, 12J, 20J
Blank·····1NO
31·····1NC

PAK-21J
Blank·····1NO1NC
20·····2NO
02·····2NC

PAK-26J～270H
Blank·····2NO2NC

**Options**

A···Ammeter
D···Push button

Note. Only with enclosure

**Career mark**

Except for 50J, 95H, 270H models.

## 6 J

PAK-6JC PAK-6JTC

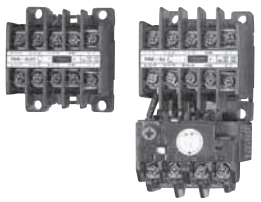

## Ratings

| Frame | | | 6J |
|---|---|---|---|
| Rated capacity | AC-3 (kW) | 240V | 2.2 |
| | | 440V | 4 |
| | | 550V | 4 |
| | AC-1 (A) (500,000 ops) | 240V | 15 |
| | | 440V | 15 |
| | | 550V | 15 |

## Conforming wire size and tightening torque

| | | Screw size | Conforming wire size | Applicable terminal connector | Tightening torque N·m(kgf·cm) |
|---|---|---|---|---|---|
| Contactor | Main circuit | M3.5 | φ1～2 0.5～2mm² | 1.25－3.5 ～ 2－3.5 | 0.8～1.2 (8～12) |
| | Control circuit | | | | |
| Thermal overload relay | Main circuit | M4 | φ1～2 0.5～5.5mm² | 1.25－4 ～ 5.5－4 | 1.2～1.8 (12～18) |
| | Control circuit | M3.5 | φ1～2 0.5～2mm² | 1.25－3.5 ～ 2－3.5 | 0.8～1.2 (8～12) |

## Magnetic contactor (open type) PAK-6JC

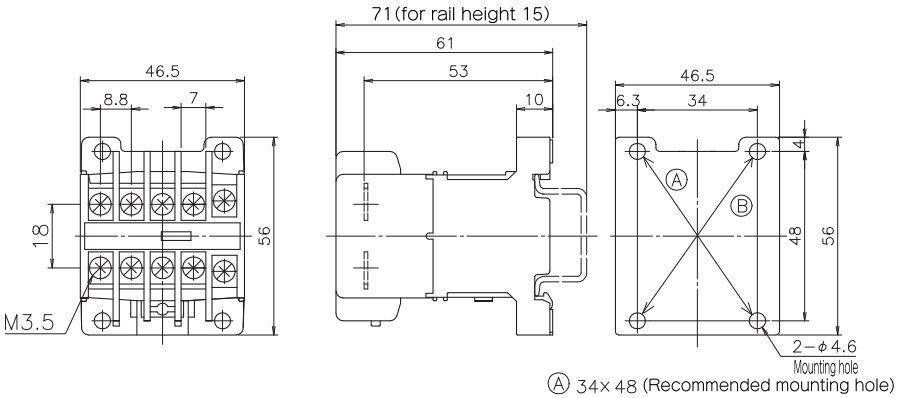


| Auxiliary contact | Contact configuration |
|---|---|
| 1NO | 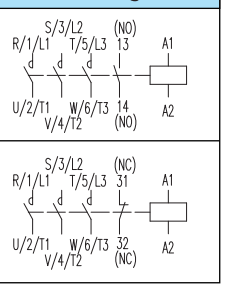 |
| 1NC |  |

Weight 6JC=0.17kg

## Magnetic starter (open type) PAK-6JTC · 6JT-3C · 6JGTC

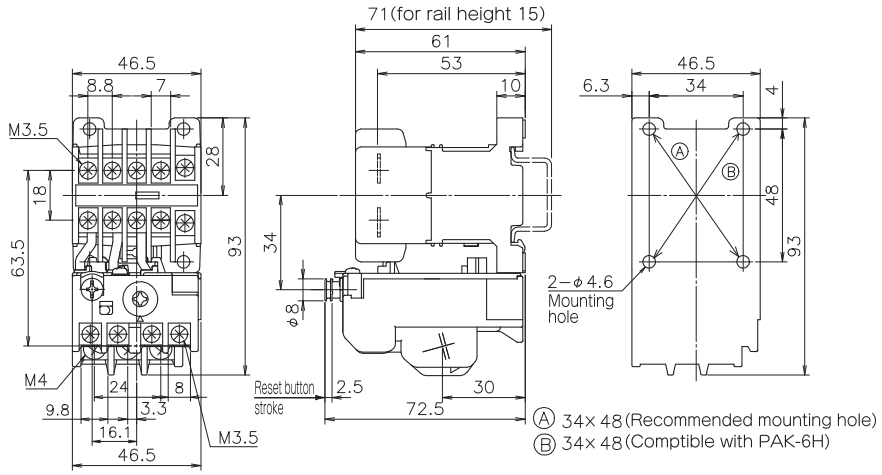


| Auxiliary contact | Contact configuration |
|---|---|
| 1NO | 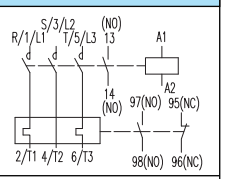 |
| 1NC | 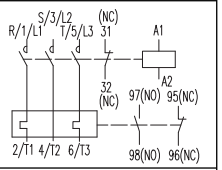 |
| For 3-heaters and phase-failure protection | 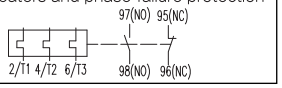 |

Weight 6JT=0.29kg

## Magnetic starter · contactor (enclosed type) PAK-6JMC(JB) · 6JM-3C · 6JGMC

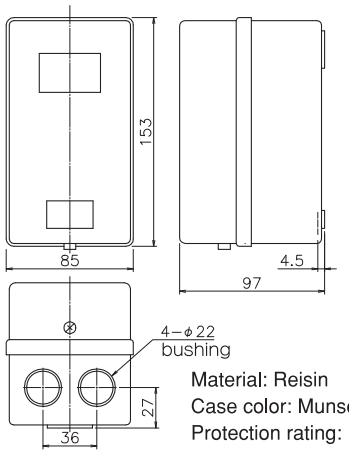


Material: Reisin
Case color: Munsel No. 5Y7/1
Protection rating: IP20

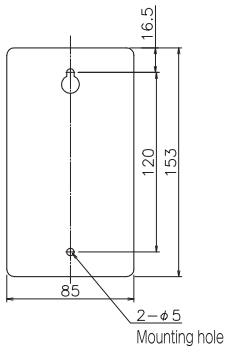


Weight 6JMC=0.45kg
6JB=0.34kg

Connection diagram

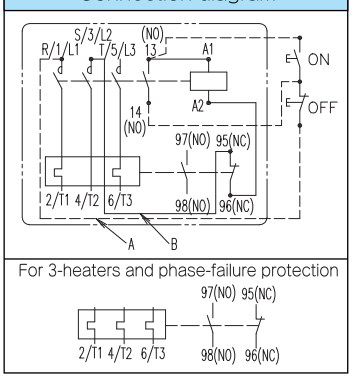


Dashed lines are not connected.
Above diagram is for magnetic starter.

①If operating from other power source, remove "B", and connect power supply to #95 and "A" on the pushbutton terminal.

## 11J・12J

PAK-11J·12J PAK-11JTC·12JTC

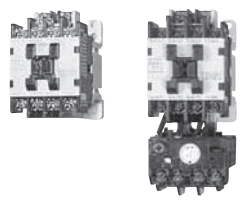

## Ratings

| Frame | | | 11J | 12J |
|---|---|---|---|---|
| Rated capacity | AC-3 (kW) | 240V | 3.7 | 4 |
| | | 440V | 4.5 | 5.5 |
| | | 550V | 4.5 | 5.5 |
| | AC-1 (A) (500,000 ops) | 240V | 20 | 26 |
| | | 440V | 20 | 26 |
| | | 550V | 20 | 26 |

## Conforming wire size and tightening torque

| | | Screw size | Conforming wire size | Applicable terminal connector | Tightening torque N·m(kgf·cm) |
|---|---|---|---|---|---|
| Contactor | Main circuit | M3.5 | φ1～2 0.5～2mm² | 1.25－3.5 ～ 2－3.5 | 0.8～1.2 (8～12) |
| | Control circuit | | | | |
| Thermal overload relay | Main circuit | M4 | φ1～2 0.5～5.5mm² | 1.25－4 ～ 5.5－4 | 1.2～1.8 (12～18) |
| | Control circuit | M3.5 | φ1～2 0.5～2mm² | 1.25－3.5 ～ 2－3.5 | 0.8～1.2 (8～12) |

## Magnetic contactor (open type) PAK-11J・12J

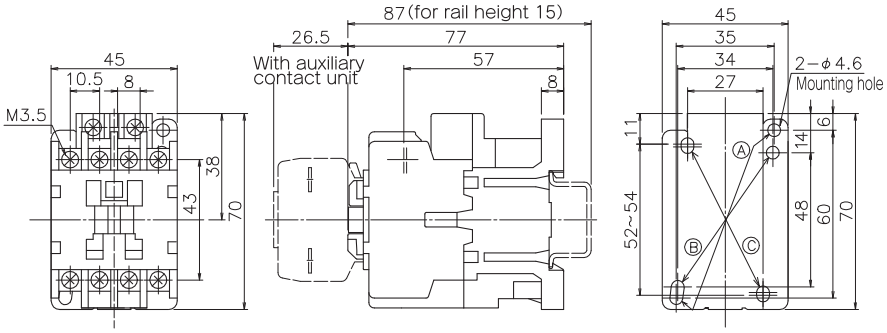


Ⓐ 35×60 (Recommended mounting hole)
Ⓑ 34×48 (compatible with PAK-6H,11H,11HK)
Ⓒ 27×52～54

| Auxiliary contact | Contact configuration |
|---|---|
| 1NO | 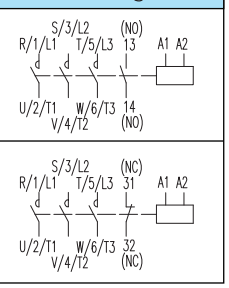 |
| 1NC | |



Weight 11J・12J=0.3kg

## Magnetic starter (open type) PAK-11JTC・12JTC・11JT-3C・12JT-3C・11JGTC・12JGTC

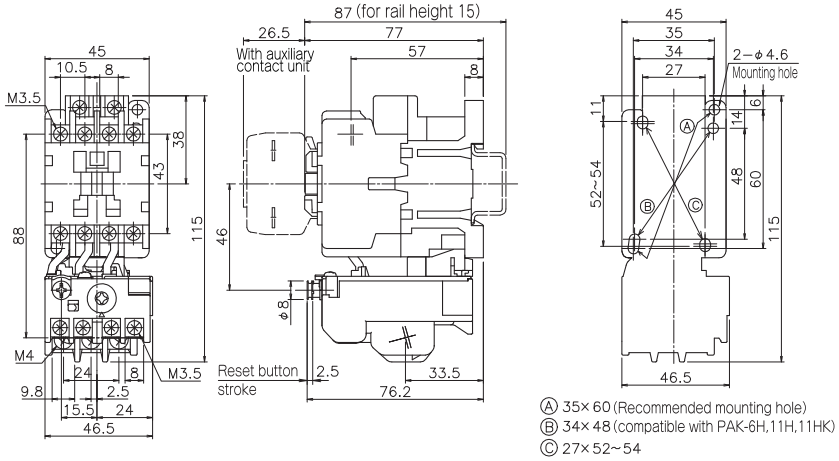


Ⓐ 35×60 (Recommended mounting hole)
Ⓑ 34×48 (compatible with PAK-6H,11H,11HK)
Ⓒ 27×52～54

| Auxiliary contact | Contact configuration |
|---|---|
| 1NO | 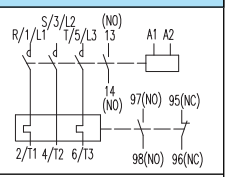 |
| 1NC | |
| For 3-heaters and phase-failure protection | 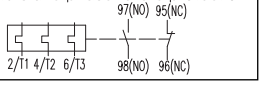 |



Weight 11JTC・12JTC=0.4kg

## Magnetic starter・contactor (enclosed type) PAK-11JMC(JB)・12JMC(JB)・11JM-3C・12JM-3C・11JGMC・12JGMC

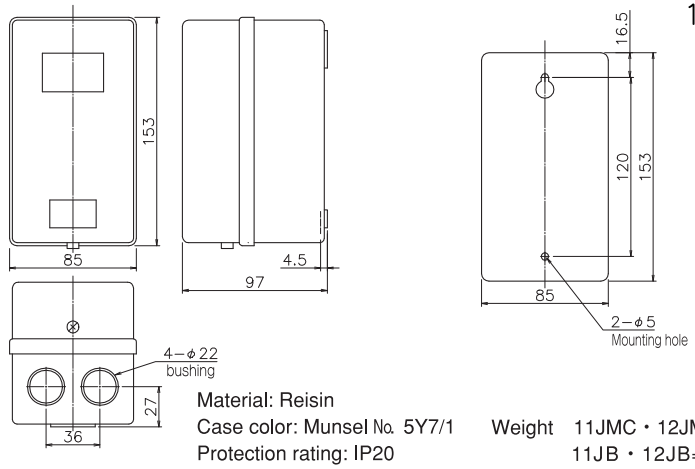


Material: Reisin
Case color: Munsel No. 5Y7/1
Protection rating: IP20

Weight 11JMC・12JMC=0.57kg
11JB・12JB=0.46kg

Connection diagram

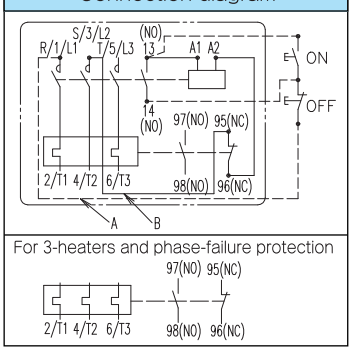


Dashed lines are not connected.
Above diagram is for magnetic starter.

①If operating from other power source, remove "B", and connect power supply to #95 and "A" on the pushbutton terminal.

# Non-Reversing Model



## 20J

PAK-20J PAK-20JTC

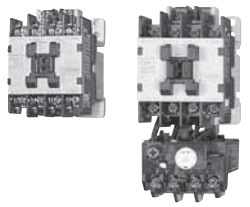

## Ratings

| Frame | | | 20J |
|---|---|---|---|
| Rated capacity | AC-3 (kW) | 240V | 7.5 |
| | | 440V | 11 |
| | | 550V | 11 |
| | AC-1 (A) (500,000 ops) | 240V | 32 |
| | | 440V | 32 |
| | | 550V | 32 |

## Conforming wire size and tightening torque

| | | Screw size | Conforming wire size | Applicable terminal connector | Tightening torque N·m(kgf·cm) |
|---|---|---|---|---|---|
| Contactor | Main cir. Aux cir. | M4 | φ1~2 0.5~5.5mm² | 1.25-4 ~ 5.5-4 | 1.2~1.8 (12~18) |
| | Control circuit | M3.5 | φ1~1.6 0.5~2mm² | 1.25-3.5 ~ 2-3.5 | 0.8~1.2 (8~12) |
| Thermal overload relay | Main circuit | M4 | φ1~2 0.5~5.5mm² | 1.25-4 ~ 5.5-4 | 1.2~1.8 (12~18) |
| | Control circuit | M3.5 | φ1~1.6 0.5~2mm² | 1.25-3.5 ~ 2-3.5 | 0.8~1.2 (8~12) |

## Magnetic contactor (open type) PAK-20J

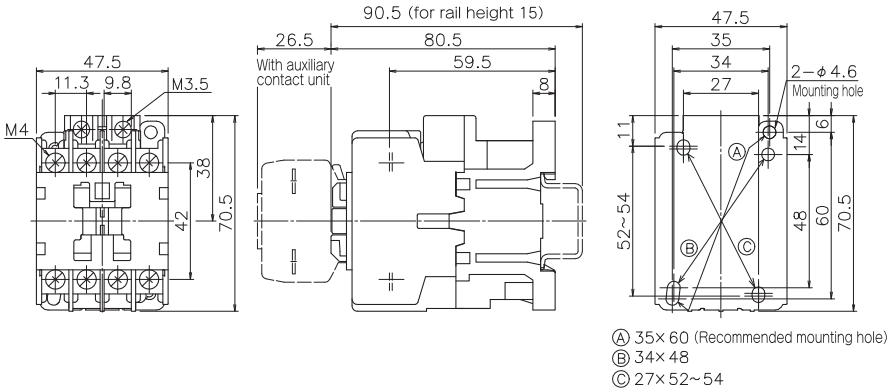


| Auxiliary contact | Contact configuration |
|---|---|
| 1NO | 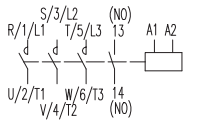 |
| 1NC | 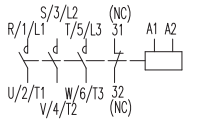 |

Weight 20J=0.32kg

## Magnetic starter (open type) PAK-20JTC · 20JT-3C · 20JGTC

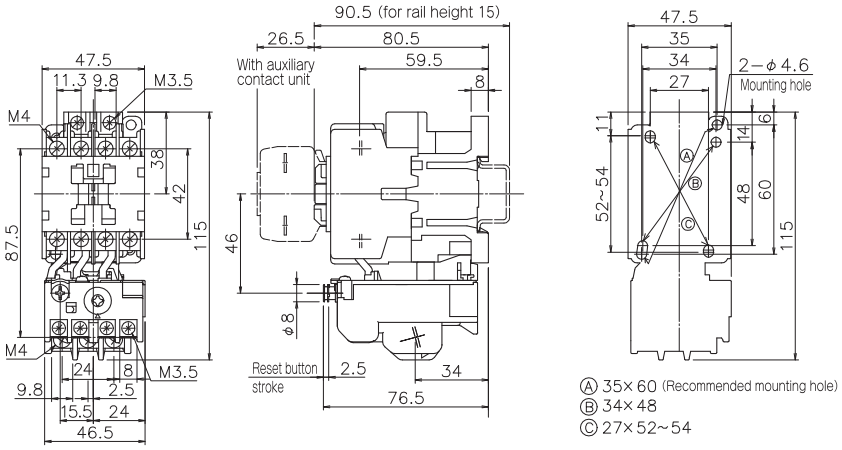


| Auxiliary contact | Contact configuration |
|---|---|
| 1NO | 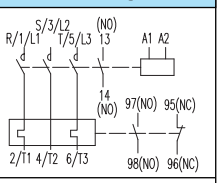 |
| 1NC | 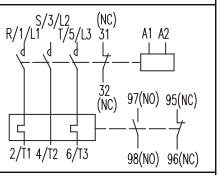 |
| For 3-heaters and phase-failure protection | 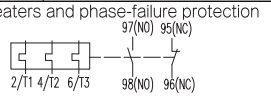 |

Weight 20JTC=0.42kg

## Magnetic starter · contactor (enclosed type) PAK-20JMC(JB) · 20JM-3C · 20JGMC

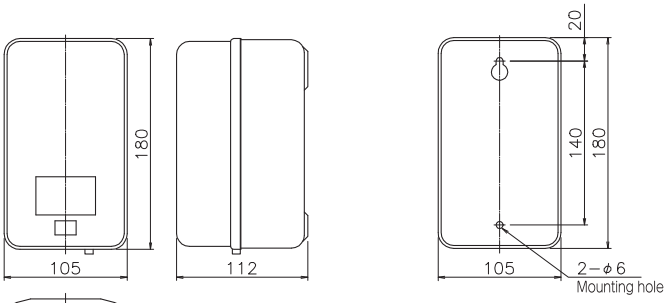


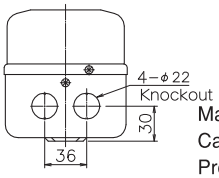


Material: Steel plate
Case color: Munsel No. 5Y7/1
Protection rating: IP20

Weight 20JMC=0.91kg
20JB=0.8kg

| Connection diagram |
|---|
| 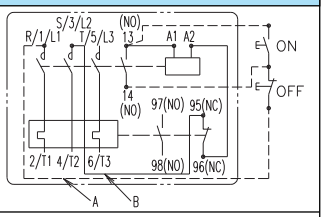 |
| For 3-heaters and phase-failure protection 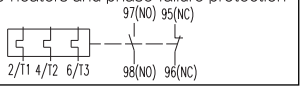 |

Dashed lines are not connected.
Above diagram is for magnetic starter.

①If operating from other power source, remove "B", and connect power supply to #95 and "A" on the pushbutton terminal.

## 21J

PAK-21J PAK-21JTC

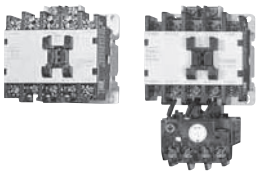

## Ratings

| Frame | | | 21J |
|---|---|---|---|
| Rated capacity | AC-3 (kW) | 240V | 7.5 |
| | | 440V | 11 |
| | | 550V | 11 |
| | AC-1 (A) (500,000 ops) | 240V | 32 |
| | | 440V | 32 |
| | | 550V | 32 |

## Conforming wire size and tightening torque

| | | Screw size | Conforming wire size | Applicable terminal connector | Tightening torque N·m(kgf·cm) |
|---|---|---|---|---|---|
| Contactor | Main circuit | M4 | φ1~2 0.5~5.5mm² | 1.25-4 ~ 5.5-4 | 1.2~1.8 (12~18) |
| | Control circuit | M3.5 | φ1~1.6 0.5~2mm² | 1.25-3.5 ~ 2-3.5 | 0.8~1.2 (8~12) |
| Thermal overload relay | Main circuit | M4 | φ1~2 0.5~5.5mm² | 1.25-4 ~ 5.5-4 | 1.2~1.8 (12~18) |
| | Control circuit | M3.5 | φ1~1.6 0.5~2mm² | 1.25-3.5 ~ 2-3.5 | 0.8~1.2 (8~12) |

## Magnetic contactor (open type) PAK-21J

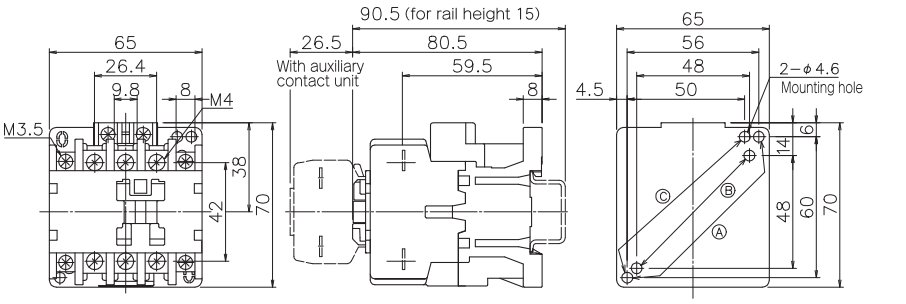


Ⓐ 56× 60 (compatible with PAK-20H) (Recommended mounting hole)
Ⓑ 48× 48 (compatible with PAK-12H,18H)
Ⓒ 50× 60

| Auxiliary contact | Contact configuration |
|---|---|
| 1NO1NC | 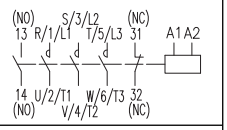 |
| 2NO | 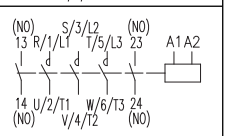 |
| 2NC | 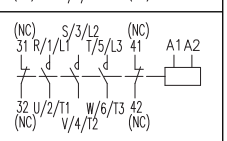 |

Weight 21J=0.36kg

## Magnetic starter (open type) PAK-21JTC · 21JT-3C · 21JGTC

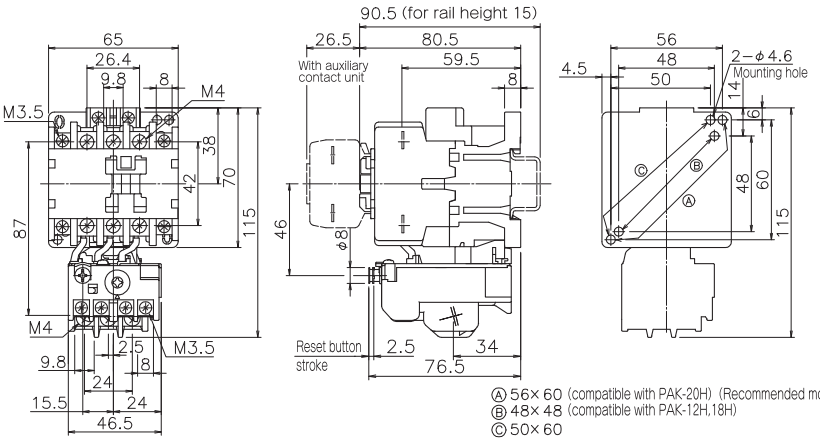


Ⓐ 56× 60 (compatible with PAK-20H) (Recommended mounting hole)
Ⓑ 48× 48 (compatible with PAK-12H,18H)
Ⓒ 50× 60

| Auxiliary contact | Contact configuration |
|---|---|
| 1NO1NC | 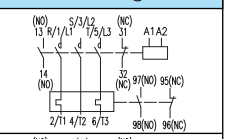 |
| 2NO | 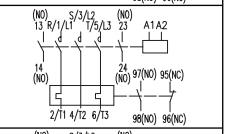 |
| 2NC | 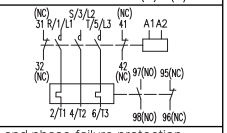 |
| For 3-heaters and phase-failure protection | 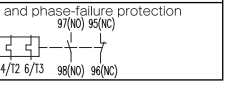 |

Weight 21JTC=0.47kg

## Magnetic starter · contactor (enclosed type) PAK-21JMC(JB) · 21JM-3C · 21JGMC

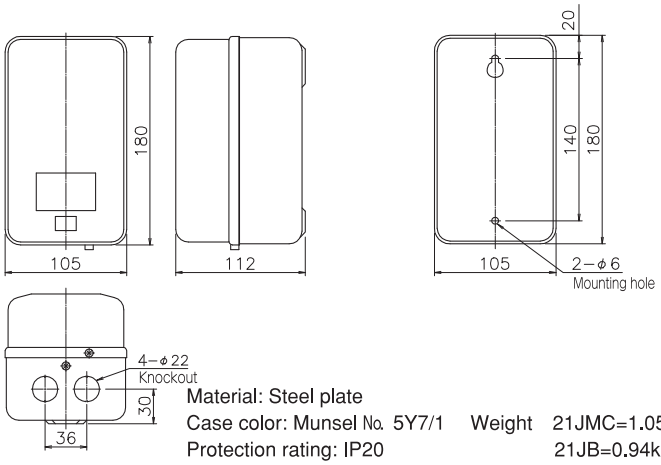


Material: Steel plate
Case color: Munsel No. 5Y7/1 Weight 21JMC=1.05kg
Protection rating: IP20 21JB=0.94kg

Connection diagram

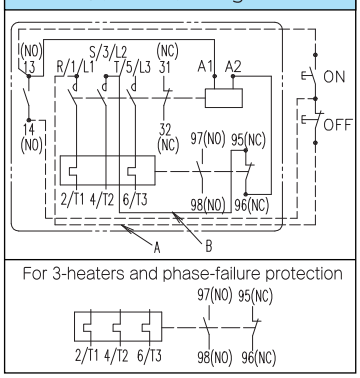


Dashed lines are not connected.
Above diagram is for magnetic starter.

①If operating from other power source, remove "B", and connect power supply to #95 and "A" on the pushbutton terminal.

2

## 26J・35J・50J

PAK-26J·35J·50J PAK-26JTC·35JTC·50JT

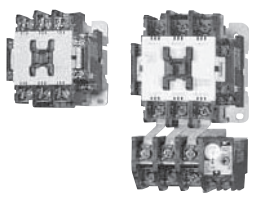

## Ratings

| Frame | | | 26J | 35J | 50J |
|---|---|---|---|---|---|
| Rated capacity | AC-3 (kW) | 240V | 10 | 15 | 18.5 |
| | | 440V | 20 | 26 | 30 |
| | | 550V | 20 | 26 | 30 |
| | AC-1 (A) (500,000 ops) | 240V | 50 | 60 | 65 |
| | | 440V | 50 | 60 | 65 |
| | | 550V | 50 | 60 | 65 |

## Conforming wire size and tightening torque

| | | Screw size | Conforming wire size | Applicable terminal connector | Tightening torque N·m(kgf·cm) |
|---|---|---|---|---|---|
| Contactor | Main circuit | M5 | φ1.6~3.2 1.25~14mm² | 1.25-5 ~ 14-5 | 2.4~3.5 (24~36) |
| | Control circuit | M3.5 | φ1~1.6 0.5~2mm² | 1.25-3.5 ~ 2-3.5 | 0.8~1.2 (8~12) |
| Thermal overload relay | Main circuit | M5 | φ1.6~3.2 1.25~14mm² | 1.25-5 ~ 14-5 | 2.4~3.5 (24~36) |
| | Control circuit | M3.5 | φ1~1.6 0.5~2mm² | 1.25-3.5 ~ 2-3.5 | 0.8~1.2 (8~12) |

## Magnetic contactor (open type) PAK-26J・35J・50J

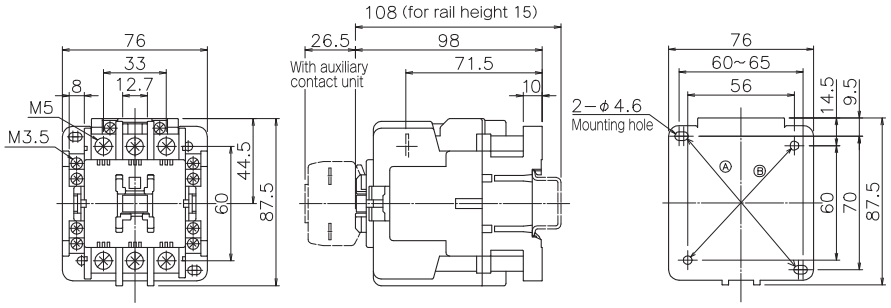


Ⓐ60~65×70 (Recommended mounting hole)
Ⓑ56×60 (compatible with PAK-20H~35H)

### Contact configuration

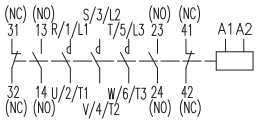


Weight 26J・35J・50J=0.68kg

## Magnetic starter (open type) PAK-26JTC・35JTC・50JT・26JT-3C・35JT-3C・50JT-3・26JGTC・35JGTC・50JGT

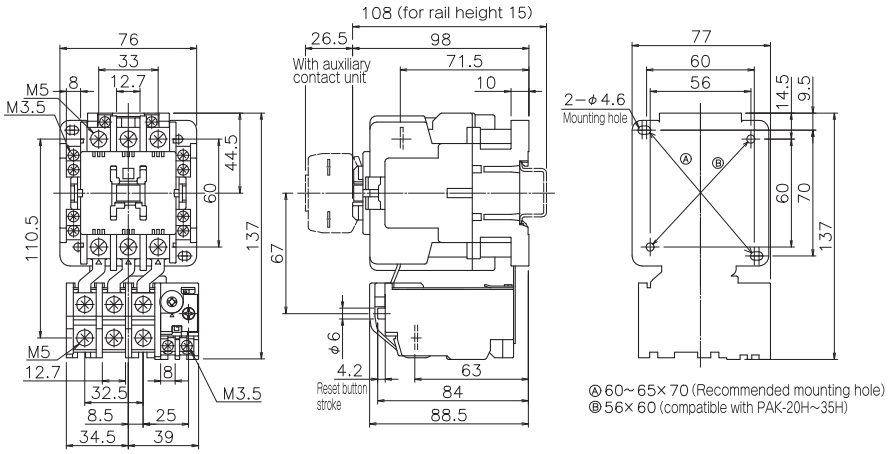


Ⓐ60~65×70 (Recommended mounting hole)
Ⓑ56×60 (compatible with PAK-20H~35H)

### Contact configuration

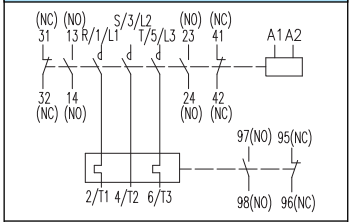


For 3-heaters and phase-failure protection

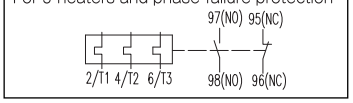


Weight 26JTC・35JTC・50JT=0.91kg

## Magnetic starter·contactor(enclosed type) PAK-26JMC(JB)·35JMC(JB)·50JM(JB)·26JM-3C·35JM-3C·50JM-3C·26JGMC·35JGMC·50JGM

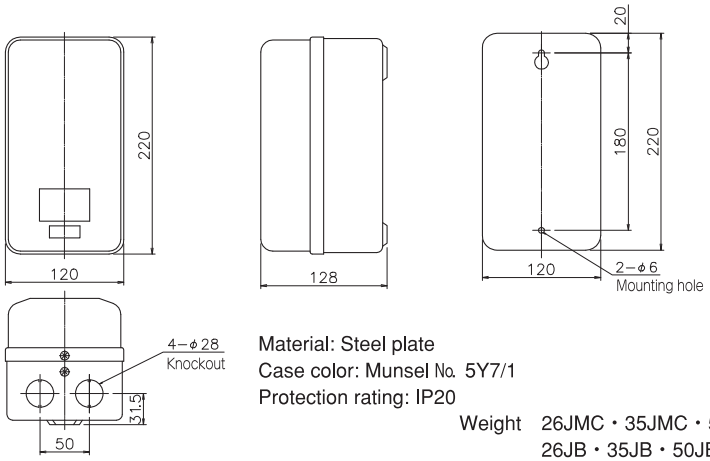


Material: Steel plate
Case color: Munsel No. 5Y7/1
Protection rating: IP20

Weight 26JMC・35JMC・50JM=1.86kg
26JB・35JB・50JB=1.63kg

### Connection diagram

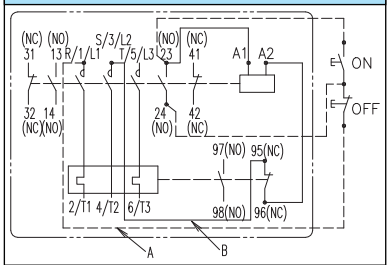


For 3-heaters and phase-failure protection

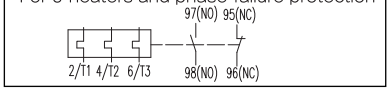


Dashed lines are not connected.
Above diagram is for magnetic starter.

①If operating from other power source, remove "B", and connect power supply to #95 and "A" on the pushbutton terminal.

## 50H·65H

PAK-50H·65H PAK-50HTC·65HTC

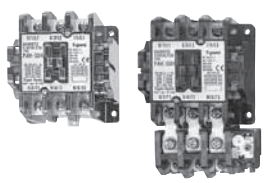

## Ratings

| Frame | | | 50H | 65H |
|---|---|---|---|---|
| Rated capacity | AC-3 (kW) | 240V | 18.5 | 22 |
| | | 440V | 30 | 37 |
| | | 550V | 30 | 37 |
| | AC-1 (A) (500,000 ops) | 240V | 75 | 90 |
| | | 440V | 75 | 90 |
| | | 550V | 75 | 90 |

## Conforming wire size and tightening torque

| | | Screw size | Conforming wire size | Applicable terminal connector | Tightening torque N·m(kgf·cm) |
|---|---|---|---|---|---|
| Contactor | Main circuit | M6 | 2 ~38mm² Using crimped terminals | 2-6 ~ 38-6S | 3.9~5.9 (40~60) |
| | Control circuit | M3.5 | φ1~1.6 0.5~2mm² | 1.25-3.5 ~ 2-3.5 | 0.8 ~1.2 (8~12) |
| Thermal overload relay | Main circuit | M6 | 2 ~38mm² Using crimped terminals | 2-6 ~ 38-6S | 3.9~5.9 (40~60) |
| | Control circuit | M3.5 | φ1~1.6 0.5~2mm² | 1.25-3.5 ~ 2-3.5 | 0.8 ~1.2 (8~12) |

## Magnetic contactor (open type) PAK-50H · 65H

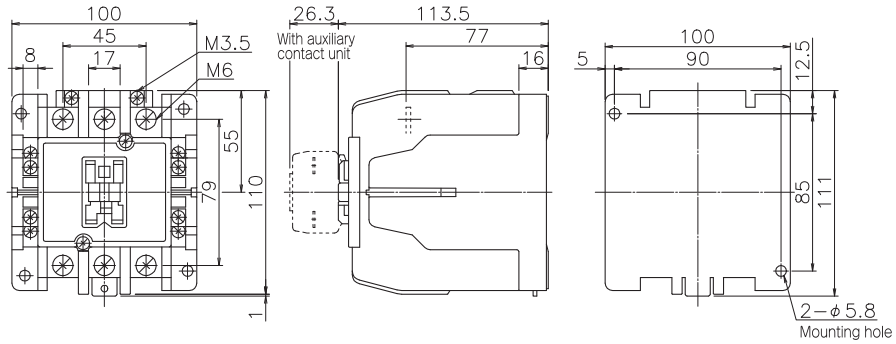


### Contact configuration

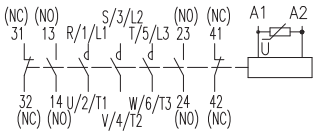


Weight 50H=1.3kg, 65H=1.5kg

## Magnetic starter (open type) PAK-50HTC · 65HTC · 50HT-3C · 65HT-3C · 50HGTC · 65HGTC

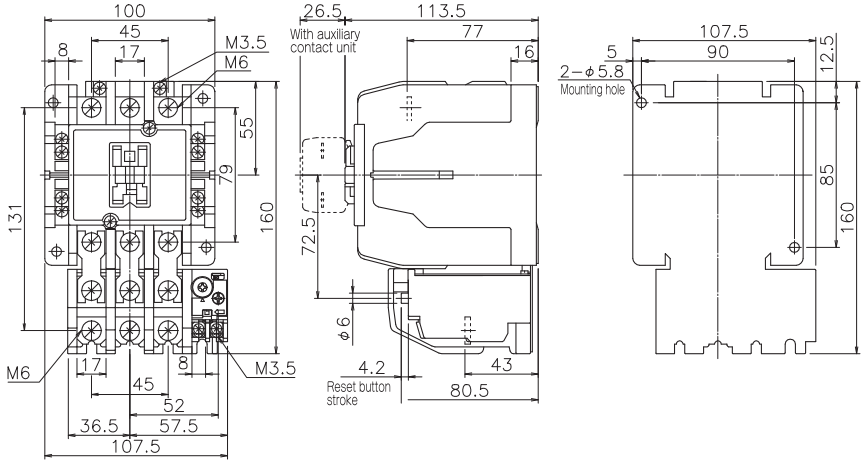


### Contact configuration

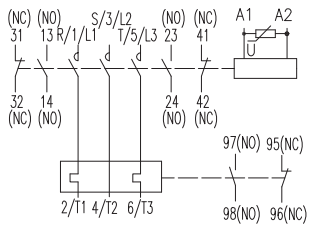


For 3-heaters and phase-failure protection

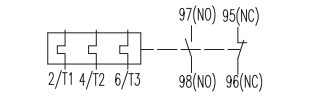


Weight 50HTC=1.7kg, 65HTC=1.9kg

## Magnetic starter · contactor (enclosed type) PAK-50HMC(HB) · 65HMC(HB) · 50HM-3C · 65HM-3C · 50HGMC · 65HGMC

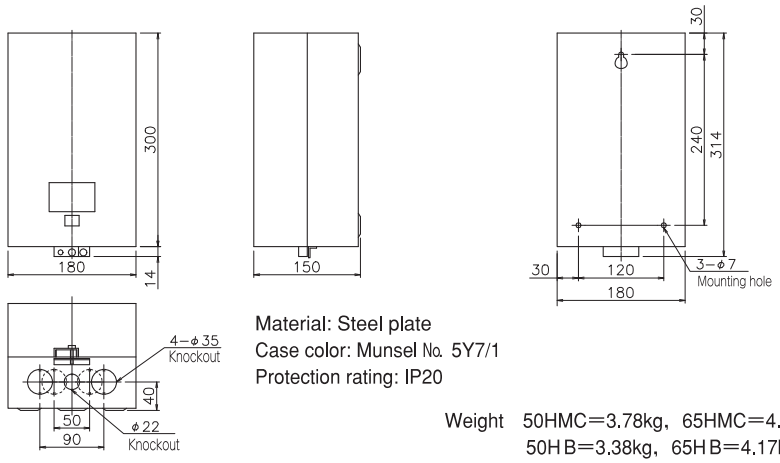


Material: Steel plate
Case color: Munsel No. 5Y7/1
Protection rating: IP20

Weight 50HMC=3.78kg, 65HMC=4.57kg
50HB=3.38kg, 65HB=4.17kg

### Connection diagram

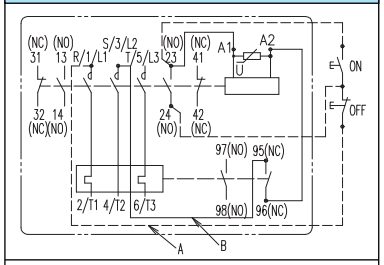


For 3-heaters and phase-failure protection

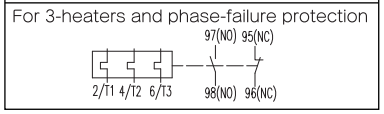


Dashed lines are not connected.
Above diagram is for magnetic starter.

①If operating from other power source, remove "B", and connect power supply to #95 and "A" on the pushbutton terminal.

2

## 80H

PAK-80H·95H PAK-80HTC·95HT

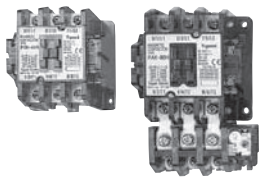

## Ratings

| Frame | | | 80H | 95H |
|---|---|---|---|---|
| Rated capacity | AC-3 (kW) | 240V | 25 | 27 |
| | | 440V | 45 | 55 |
| | | 550V | 45 | 55 |
| | AC-1 (A) (500,000 ops) | 240V | 110 | 110 |
| | | 440V | 110 | 110 |
| | | 550V | 110 | 110 |

## Conforming wire size and tightening torque

| | | Screw size | Conforming wire size | Applicable terminal connector | Tightening torque N·m(kgf·cm) |
|---|---|---|---|---|---|
| Contactor | Main circuit | M6 | 2 ~38mm² Using crimped terminals | 2-6 ~ 38-6S | 3.9 ~5.9 (40~60) |
| | Control circuit | M3.5 | φ1~1.6 0.5~2mm² | 1.25-3.5 ~ 2-3.5 | 0.8~1.2 (8~12) |
| Thermal overload relay | Main circuit | M6 | 2 ~38mm² Using crimped terminals | 2-6 ~ 38-6S | 3.9 ~5.9 (40~60) |
| | Control circuit | M3.5 | φ1~1.6 0.5~2mm² | 1.25-3.5 ~ 2-3.5 | 0.8~1.2 (8~12) |

## Magnetic contactor (open type) PAK-80H · 95H

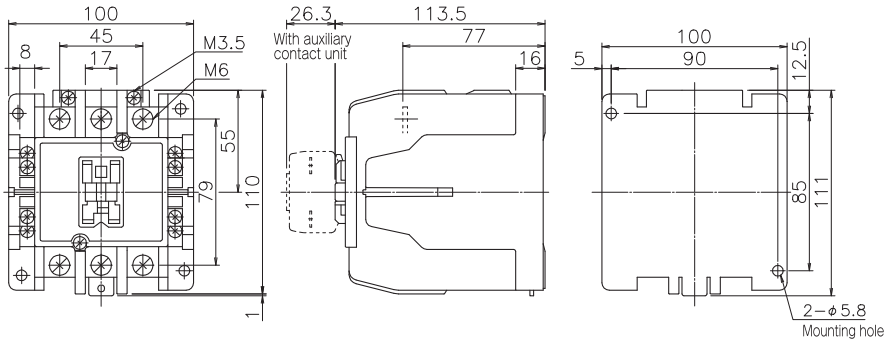


### Contact configuration

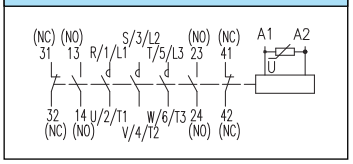


Weight 80H・90H=1.5kg

## Magnetic starter (open type) PAK-80HTC · 95HT · 80HT-3C · 90HT-3 · 80HGTC · 90HGT

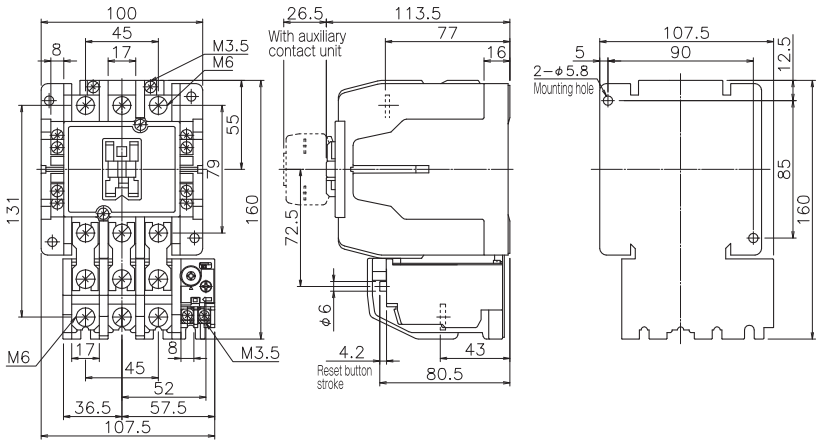


### Contact configuration

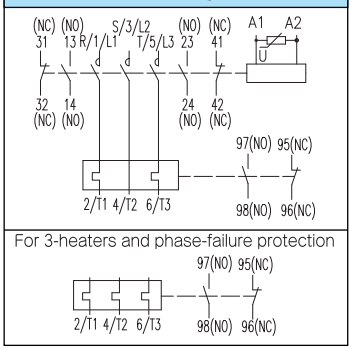


Weight 80HTC・95HT=1.9kg

## Magnetic starter · contactor (enclosed type) PAK-80HMC(HB) · 95HM(HB) · 80HM-3C · 95HM-3 · 80HGMC · 95HGM

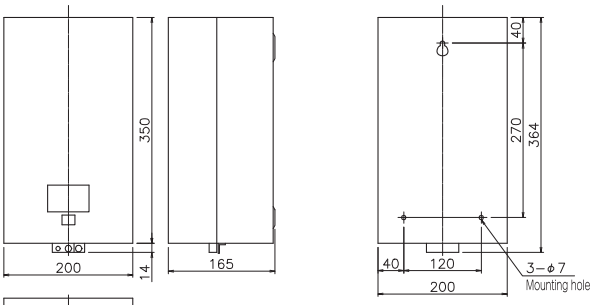


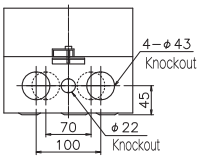


Material: Steel plate
Case color: Munsel No. 5Y7/1
Protection rating: IP20

Weight 80HMC・95HM=4.57kg
80HB・95HB=4.17kg

### Connection diagram

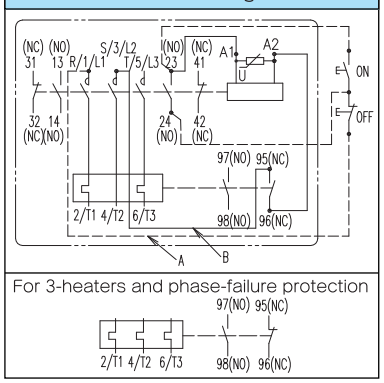


Dashed lines are not connected.
Above diagram is for magnetic starter.

①If operating from other power source, remove "B", and connect power supply to #95 and "A" on the pushbutton terminal.

## 100H

PAK-100H PAK-100HTC

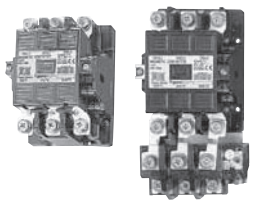

## Ratings

| Frame | | | 100H |
|---|---|---|---|
| Rated capacity | AC-3 (kW) | 240V | 37 |
| | | 440V | 55 |
| | | 550V | 55 |
| | AC-1 (A) (500,000 ops) | 240V | 150 |
| | | 440V | 150 |
| | | 550V | 150 |

## Conforming wire size and tightening torque

| | | Screw size | Conforming wire size | Applicable terminal connector | Tightening torque N·m(kgf·cm) |
|---|---|---|---|---|---|
| Contactor | Main circuit | M8 | 2～80mm² Using crimped terminals | 2-8 ~ CB80-8 | 9.0 ～13.5 (92～138) |
| | Control circuit | M3.5 | φ1～1.6 0.5～2mm² | 1.25-3.5 ~ 2-3.5 | 0.8 ～1.2 (8 ～12) |
| Thermal overload relay | Main circuit | M8 | 2～80mm² Using crimped terminals | 2-8 ~ CB80-8 | 9.0 ～13.5 (92～138) |
| | Control circuit | M3.5 | φ1～1.6 0.5～2mm² | 1.25-3.5 ~ 2-3.5 | 0.8 ～1.2 (8 ～12) |

## Magnetic contactor (open type) PAK-100H

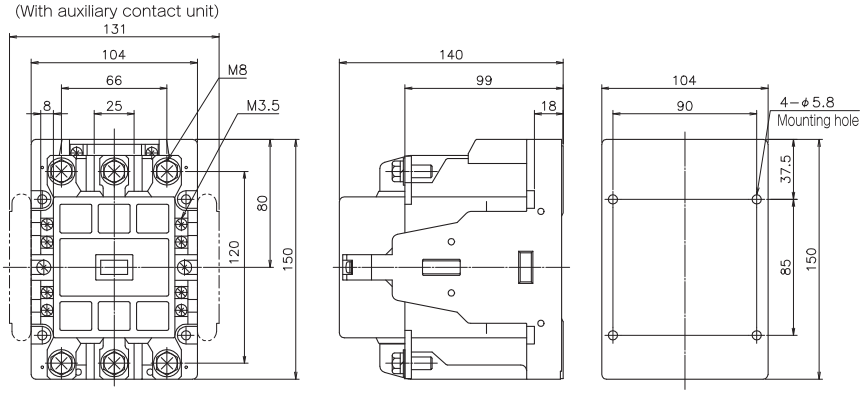


### Contact configuration

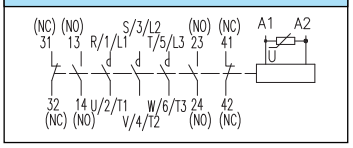


Weight 2.9kg

## Magnetic starter (open type) PAK-100HTC · 100HT-3C · 100HGTC

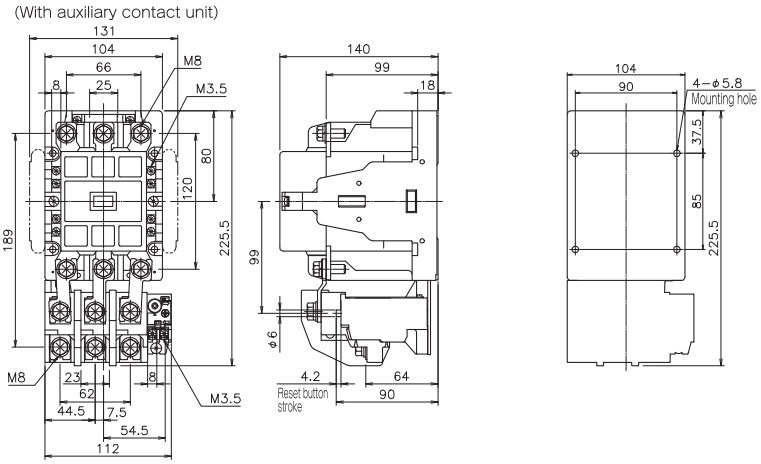


### Contact configuration

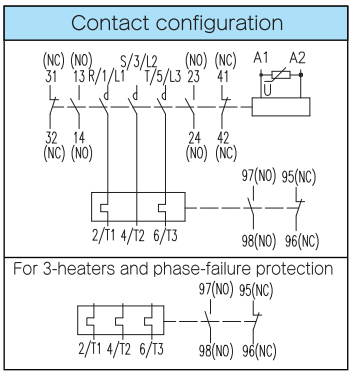


Weight 3.7kg

## Magnetic starter · contactor (enclosed type) PAK-100HMC(HB) · 100HM-3C · 100HGMC

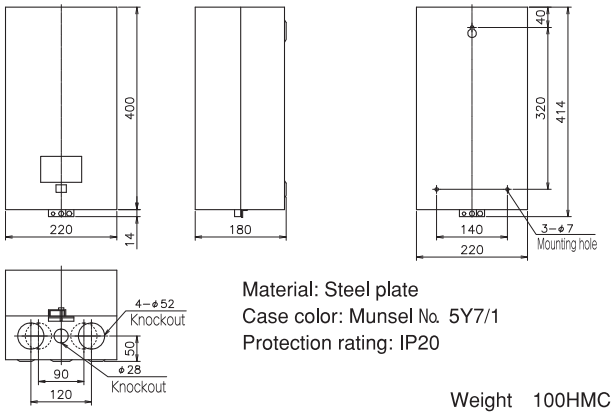


Material: Steel plate
Case color: Munsel No. 5Y7/1
Protection rating: IP20

Weight 100HMC=7.8kg
100HB=7.0kg

### Connection diagram

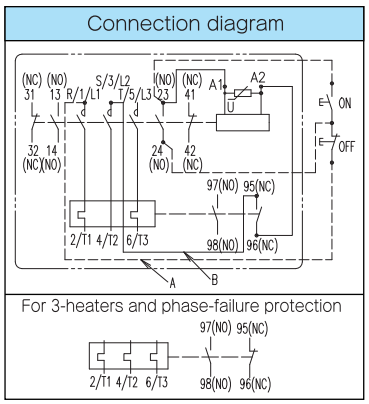


Dashed lines are not connected.
Above diagram is for magnetic starter.

①If operating from other power source, remove "B", and connect power supply to #95 and "A" on the pushbutton terminal.

2

## 125H

PAK-125H PAK-125HTC

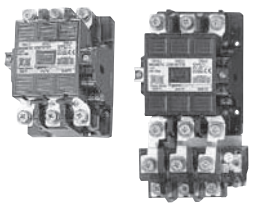

## Ratings

| Frame | | | 125H |
|---|---|---|---|
| Rated capacity | AC-3 (kW) | 240V | 45 |
| | | 440V | 60 |
| | | 550V | 70 |
| | AC-1 (A) (500,000 ops) | 240V | 170 |
| | | 440V | 170 |
| | | 550V | 170 |

## Conforming wire size and tightening torque

| | | Screw size | Conforming wire size | Applicable terminal connector | Tightening torque N·m(kgf·cm) |
|---|---|---|---|---|---|
| Contactor | Main circuit | M8 | 2～80mm² Using crimped terminals | 2-8 ～ CB80-8 | 9.0 ～13.5 (92～138) |
| | Control circuit | M3.5 | φ1～1.6 0.5～2mm² | 1.25-3.5 ～ 2-3.5 | 0.8 ～1.2 (8 ～12) |
| Thermal overload relay | Main circuit | M8 | 2～80mm² Using crimped terminals | 2-8 ～ CB80-8 | 9.0 ～13.5 (92～138) |
| | Control circuit | M3.5 | φ1～1.6 0.5～2mm² | 1.25-3.5 ～ 2-3.5 | 0.8 ～1.2 (8 ～12) |

## Magnetic contactor (open type) PAK-125H

(With auxiliary contact unit)

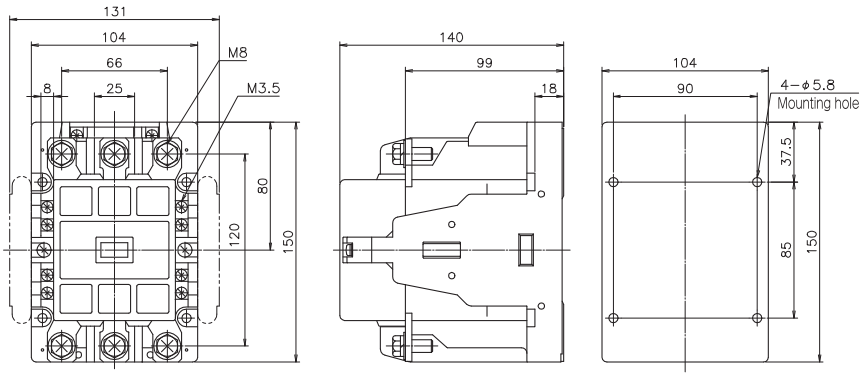


### Contact configuration

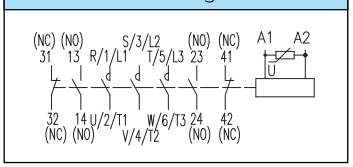


Weight 2.9kg

## Magnetic starter (open type) PAK-125HTC · 125HTC-3C · 125HGTC

(With auxiliary contact unit)

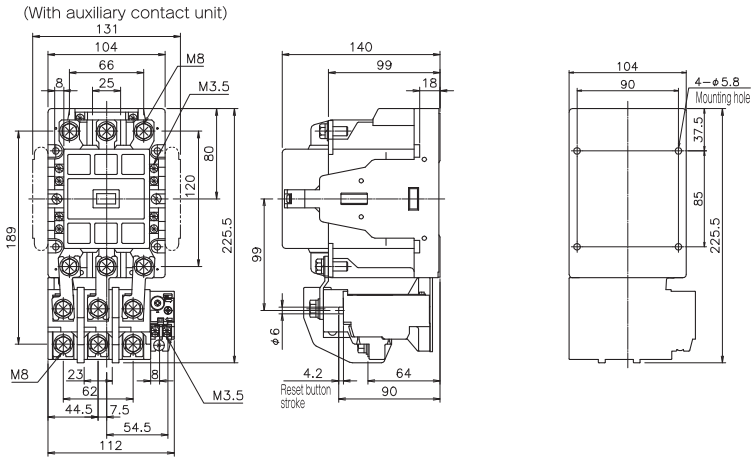


### Contact configuration

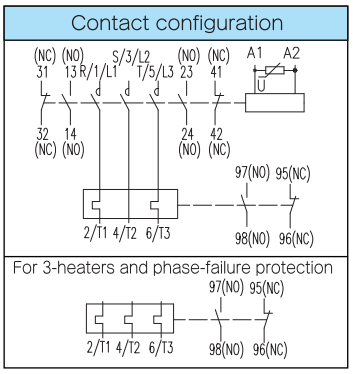


Weight 3.7kg

## Magnetic starter · contactor (enclosed type) PAK-125HMC(HB) · 125HM-3C · 125HGMC

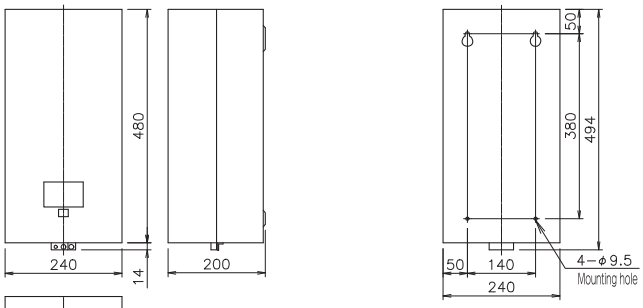


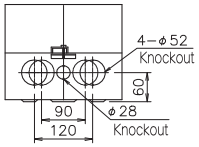


Material: Steel plate
Case color: Munsel No. 5Y7/1
Protection rating: IP20

Weight 125HMC=9.6kg
125HB=8.8kg

### Connection diagram

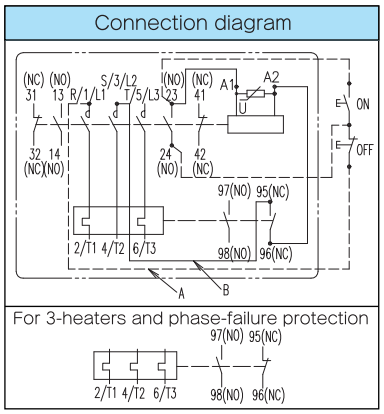


Dashed lines are not connected.
Above diagram is for magnetic starter.

①If operating from other power source, remove "B", and connect power supply to #95 and "A" on the pushbutton terminal.

## 150H

PAK-150H PAK-150HTC

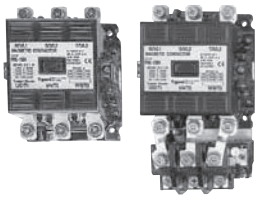

## Ratings

| Frame | | | 150H |
|---|---|---|---|
| Rated capacity | AC-3 (kW) | 240V | 60 |
| | | 440V | 75 |
| | | 550V | 75 |
| | AC-1 (A) (500,000 ops) | 240V | 220 |
| | | 440V | 220 |
| | | 550V | 220 |

## Conforming wire size and tightening torque

| | | Screw size | Conforming wire size | Applicable terminal connector | Tightening torque N·m(kgf·cm) |
|---|---|---|---|---|---|
| Contactor | Main circuit | M8 | 2～100mm² Using crimped terminals | 2-8 ~ CB100-8 | 9.0～13.5 (92～138) |
| | Control circuit | M3.5 | φ1～1.6 0.5～2mm² | 1.25-3.5 ~ 2-3.5 | 0.8～1.2 (8～12) |
| Thermal overload relay | Main circuit | M8 | 2～100mm² Using crimped terminals | 2-8 ~ CB100-8 | 9.0～13.5 (92～138) |
| | Control circuit | M3.5 | φ1～1.6 0.5～2mm² | 1.25-3.5 ~ 2-3.5 | 0.8～1.2 (8～12) |

## Magnetic contactor (open type) PAK-150H

(With auxiliary contact unit)

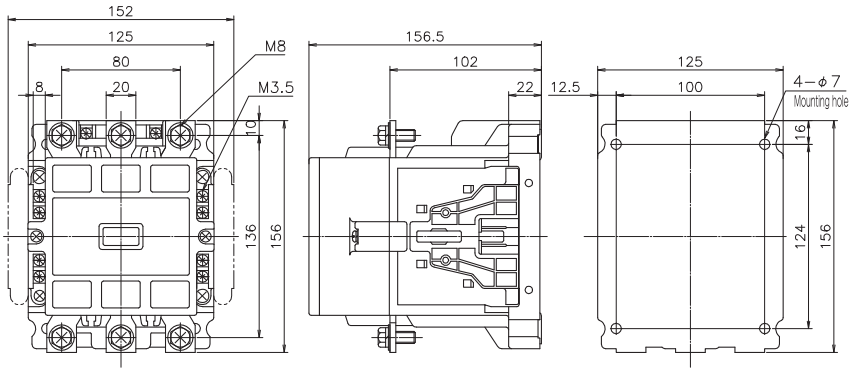


Contact configuration

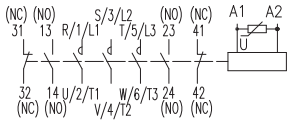


Weight 3.5kg

## Magnetic starter (open type) PAK-150HTC · 150HT-3C · 150HGTC

(With auxiliary contact unit)

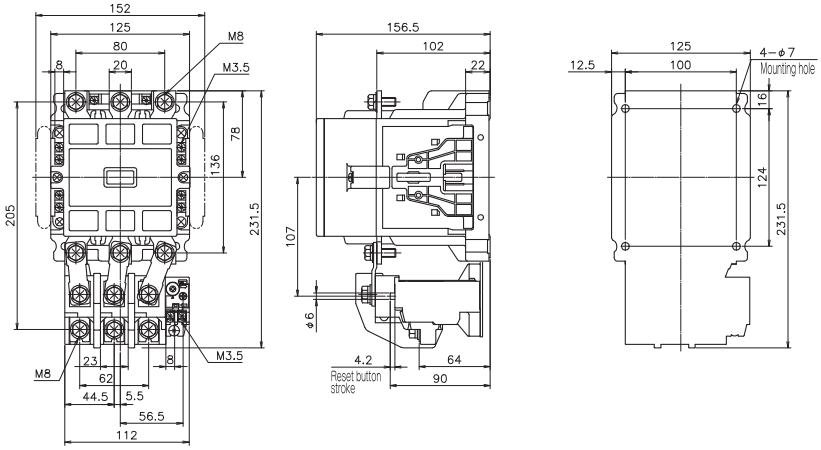


Contact configuration

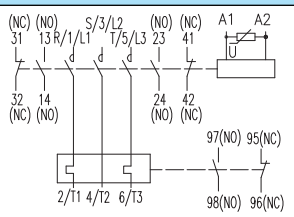


For 3-heaters and phase-failure protection

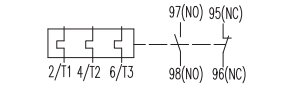


Weight 4.6kg

## Magnetic starter · contactor (enclosed type) PAK-150HMC(HB) · 150HM-3C · 150HGMC

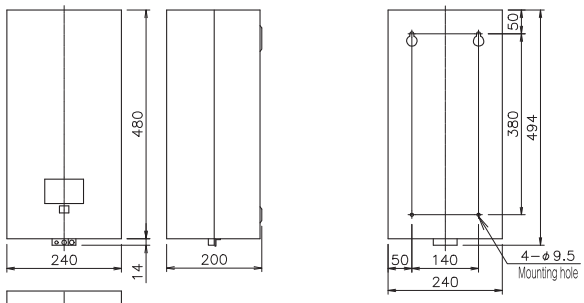


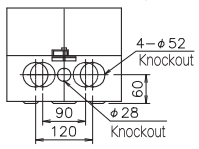


Material: Steel plate
Case color: Munsel No. 5Y7/1
Protection rating: IP20

Weight 150HMC=10.2kg
150HB=9.7kg

Connection diagram

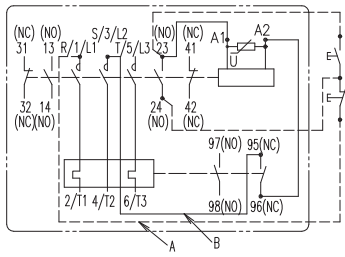


For 3-heaters and phase-failure protection

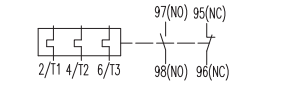


Dashed lines are not connected.
Above diagram is for magnetic starter.

①If operating from other power source, remove "B", and connect power supply to #95 and "A" on the pushbutton terminal.

# Non-Reversing Model



## 220H・270H

PAK-220H·270H PAK-220HTC·270HT

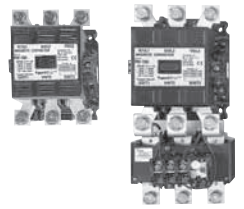

## Ratings

| Frame | | | 220H | 270H |
|---|---|---|---|---|
| Rated capacity | AC-3 (kW) | 240V | 80 | 90 |
| | | 440V | 90 | 132 |
| | | 550V | 90 | 132 |
| | AC-1 (A) (500,000 ops) | 240V | 275 | 310 |
| | | 440V | 275 | 310 |
| | | 550V | 275 | 310 |

## Conforming wire size and tightening torque

| | | Screw size | Conforming wire size | Applicable terminal connector | Tightening torque N-m(kgf·cm) |
|---|---|---|---|---|---|
| Contactor | Main circuit | M10 | 2～150mm² Using crimped terminals | 2-10 ⌇ 150-10 | 18.1～27 (185～275) |
| | Control circuit | M3.5 | φ1～1.6 0.5～2mm² | 1.25-3.5 ⌇ 2-3.5 | 0.8～1.2 (8～12) |
| Thermal overload relay | Main circuit | M10 | 2～150mm² Using crimped terminals | 2-10 ⌇ 150-10 | 18.1～27 (185～275) |
| | Control circuit | M3.5 | φ1～1.6 0.5～2mm² | 1.25-3.5 ⌇ 2-3.5 | 0.8～1.2 (8～12) |

## Magnetic contactor (open type) PAK-220H・270H

(With auxiliary contact unit)

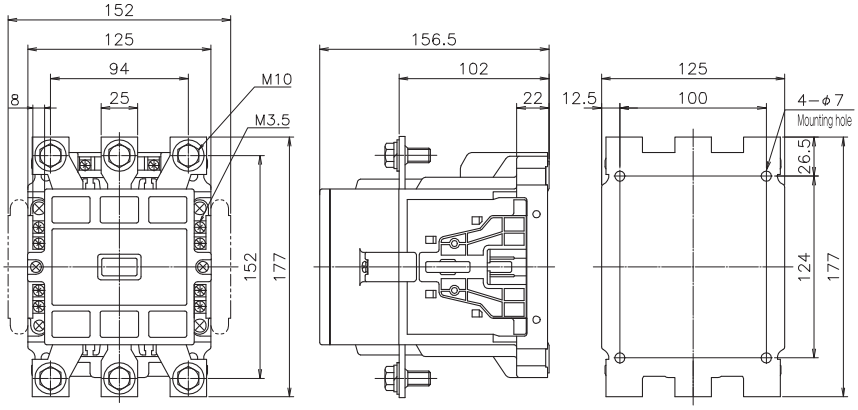


### Contact configuration

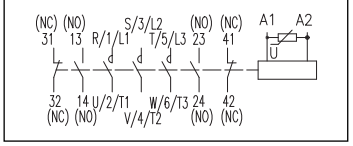


Weight 220H・270H=4.0kg

## Magnetic starter (open type) PAK-220HTC・270HT・220HT-3C・270HT-3・220HGTC・270HGT

(With auxiliary contact unit)

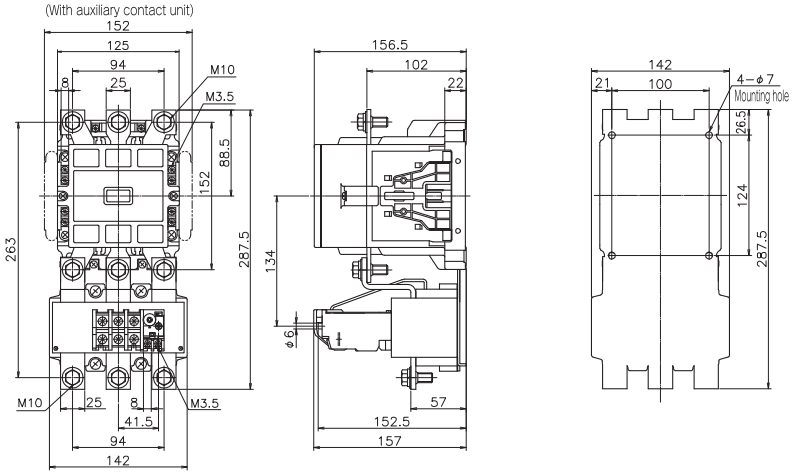


### Contact configuration

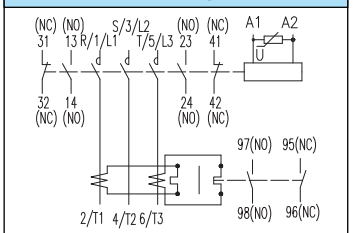


For 3-heaters and phase-failure protection

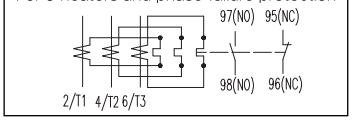


Weight 220HTC・270HT=6.3kg

## Magnetic starter (enclosed type) PAK-220HMC(HB)・270HM(HB)・220HM-3C・270HM-3・220HGMC・270HGM

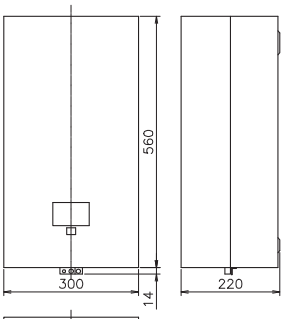


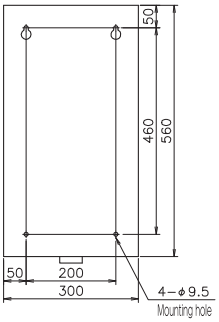


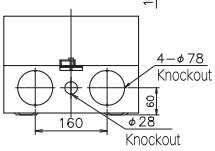


Material: Steel plate
Case color: Munsel No. 5Y7/1
Protection rating: IP20

Weight 220HMC・270HM=13.3kg
220HB・270HB=11.0kg

### Connection diagram

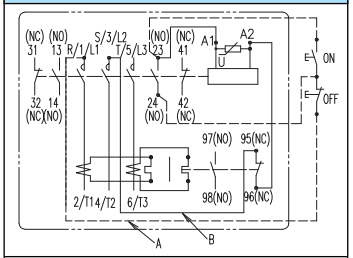


For 3-heaters and phase-failure protection

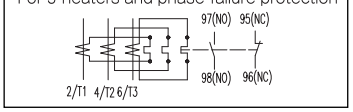


Dashed lines are not connected.
Above diagram is for magnetic starter.

①If operating from other power source, remove "B", and connect power supply to #95 and "A" on the pushbutton terminal.

## 300J・400J

PAK-300J · 400J PAK-300JT · 400JT

## Ratings

| Frame | | | 300J | 400J |
|---|---|---|---|---|
| Rated capacity | AC-3 (kW) | 220V | 90 | 115 |
| | | 440V | 150 | 200 |
| | | 550V | 160 | 200 |
| | AC-1 (A) (500,000 ops) | 220V | 350 | 420 |
| | | 440V | 350 | 420 |
| | | 550V | — | — |

## Conforming wire size and tightening torque

| | | Screw size | Conforming wire size | Applicable terminal connector | Tightening torque N·m(kgf·cm) |
|---|---|---|---|---|---|
| Contactor | Main circuit | M12 | 2～200㎟ | 2-12 ～ 200-12 | 35～45 (350～450) |
| | Control circuit | M3.5 | φ1～1.6 0.5～2㎟ | 1.25-3.5 ～ 2-3.5 | 0.8～1.0 (8～10) |
| Thermal overload relay | Main circuit | M12 | 2～200㎟ | 2-12 ～ 200-12 | 35～45 (350～450) |
| | Control circuit | M3.5 | φ1～1.6 0.5～2㎟ | 1.25-3.5 ～ 2-3.5 | 0.8～1.0 (8～10) |

## Magnetic contactor (open type) PAK-300J · 400J

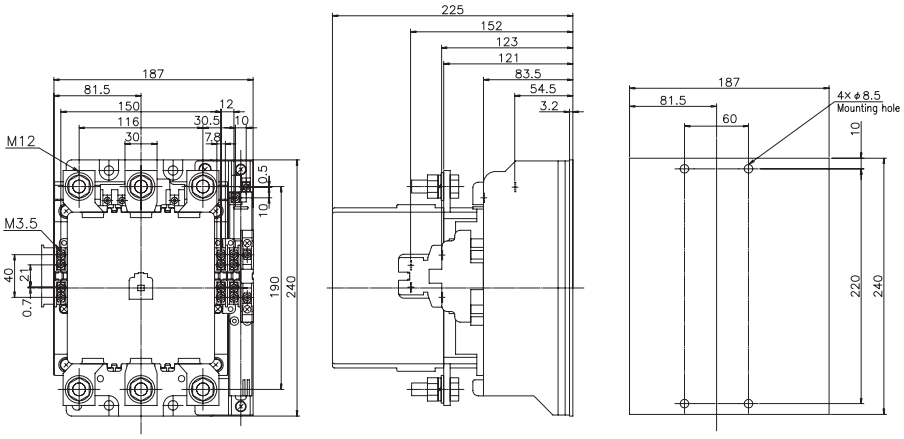


### Contact configuration

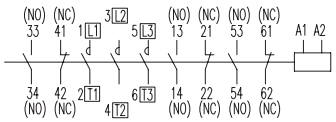


Weight 300J・400J=9.7kg

## Magnetic starter (open type) PAK-300JT · 400JT · 300JGT · 400JGT

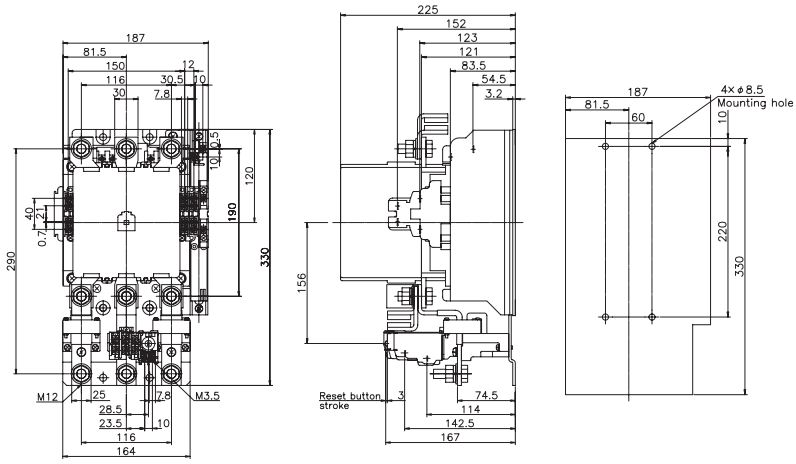


### Contact configuration

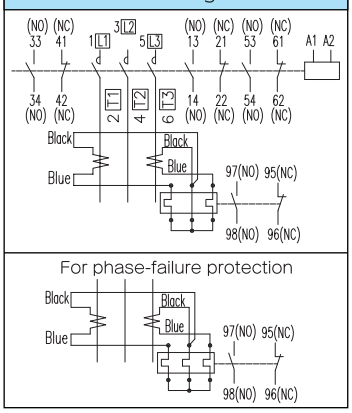


Weight 300JT・400JT=13kg

2

## 600J

PAK-600J PAK-600JT

## Ratings

| Frame | | | 600J |
|---|---|---|---|
| Rated capacity | AC-3 (kW) | 220V | 160 |
| | | 440V | 300 |
| | | 550V | 300 |
| | AC-1 (A) (500,000 ops) | 220V | 600 |
| | | 440V | 600 |
| | | 550V | — |

## Conforming wire size and tightening torque

| | | Screw size | Conforming wire size | Applicable terminal connector | Tightening torque N-m(kgf·cm) |
|---|---|---|---|---|---|
| Contactor | Main circuit | M12 | 2～325mm² | 2-12 ～ 325-12 | 35～45 (350～450) |
| | Control circuit | M4 M3.5 | φ1.6 1.25～2mm² | 1.25-4 ～ 2-4 | 1.0～1.5 (10～15) |
| Thermal overload relay | Main circuit | M12 | 2～325mm² | 2-12 ～ 325-12 | 35～45 (350～450) |
| | Control circuit | M3.5 | φ1.6 1.25～2mm² | 1.25-3.5 ～ 2-3.5 | 0.8～1.0 (8～10) |

### Magnetic contactor (open type) PAK-600J

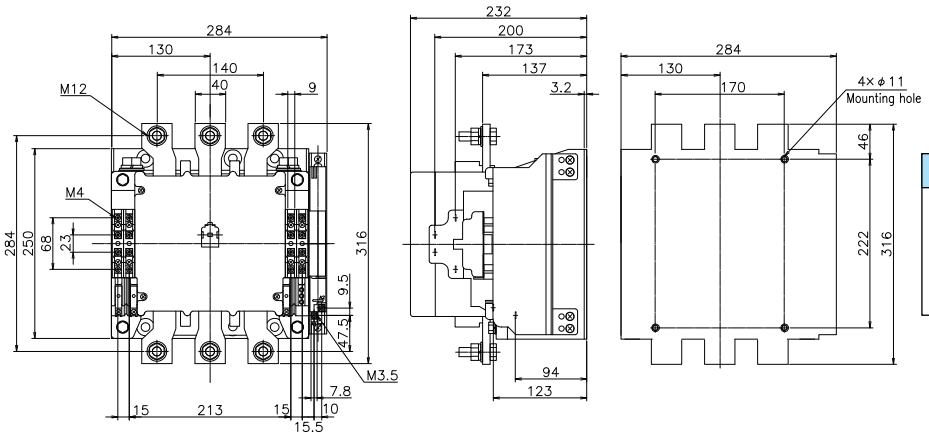


Contact configuration

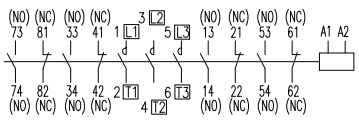


Weight 22kg

### Magnetic starter (open type) PAK-600JT · 600JGT

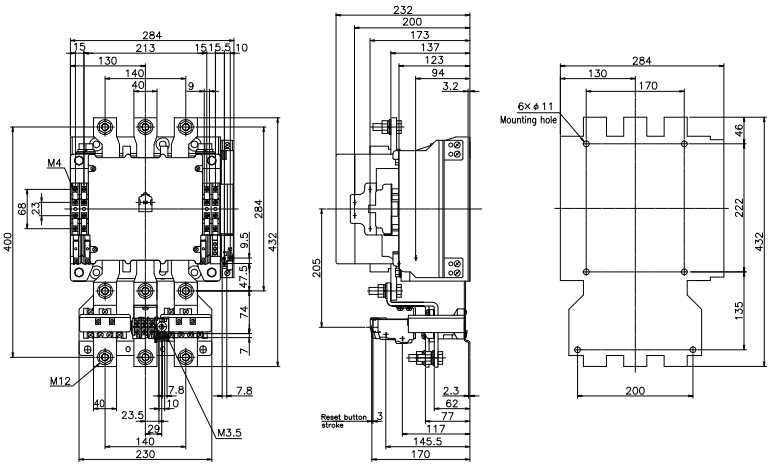


Contact configuration

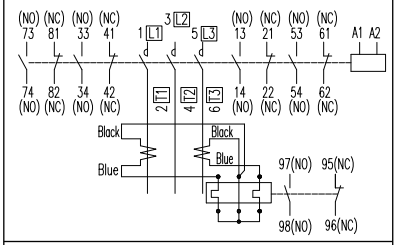


For phase-failure protection

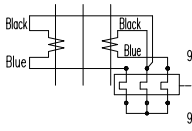


Weight 28kg

## 800J

PAK-800J

## Ratings

| Frame | | | 800J |
|---|---|---|---|
| Rated capacity | AC-2 (kW) | 220V | 200 |
| | | 440V | 400 |
| | | 550V | — |
| | AC-1 (A) (100,000 ops) | 220V | 800 |
| | | 440V | 800 |
| | | 550V | — |

## Conforming wire size and tightening torque

| | | Screw size | Conforming wire size | Applicable terminal connector | Tightening torque N-m(kgf·cm) |
|---|---|---|---|---|---|
| Contactor | Main circuit | M16 | 2～325mm² | 2-16 ～ 325-16 | 35～45 (350～450) |
| | Control circuit | M4 | φ1～2 0.5～5.5mm² | 1.25-4 ～ 2-4 | 1.0～1.5 (10～15) |

2

Magnetic contactor (open type) PAK-800J

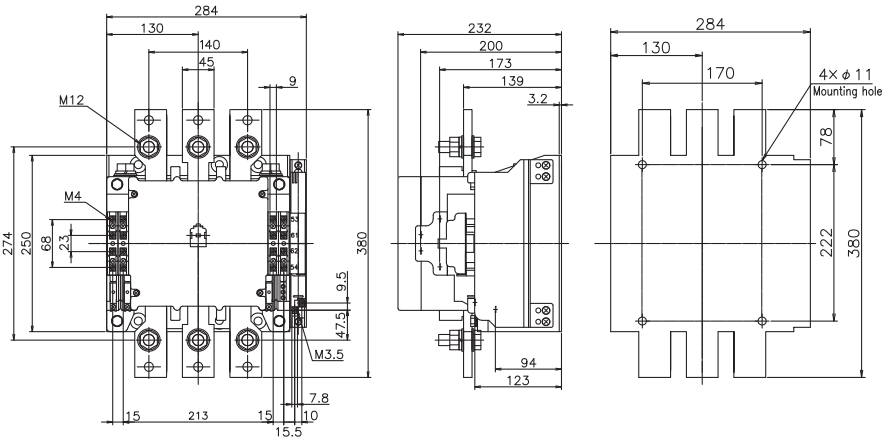


Contact configuration

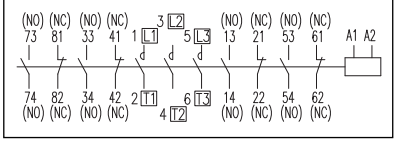


Weight 25kg

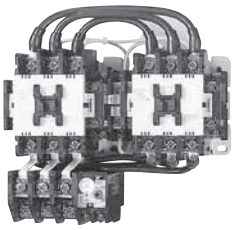
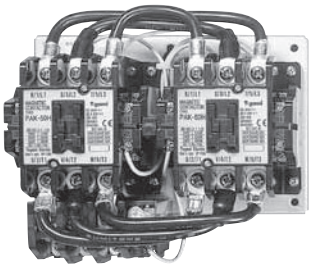
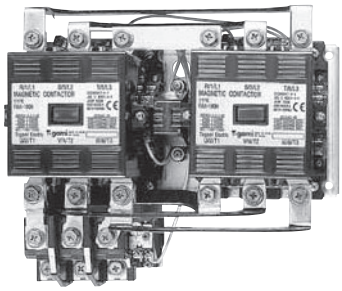

## Features

### ●Reversing standard magnetic contactors & starters

Two standard magnetic contactors are mounted together with a high-reliable mechanical interlock (RSK-11J is an integrated type) . The RSK-12J to 50J interlock units (ML-E type)is provided with both mechanical interlock and electrical interlock contacts (1NCx2).

### ●Reversing magnetic starters with phase-failure protection thermal overload relays

Reversing magnetic starters with phase-failure protection thermal overload relays are reversing magnetic starters combined with an phase-failure protection thermal overload relay containing a differential amplifying mechanism. In addition to motor start/stop and protection from overload and locking, they also protect motors from phase-failure protection accidents.
The same as standard reversing magnetic starters, this magnetic starter with phase-failure protection thermal overload relay is easy-to-handle and economical.

### ●Reversing magnetic starters with 3-heaters thermal overload relays

It protects motor from burnout due to overload and phase-failure.

## Ratings, performance and specifications

| Item | Item Page |
|---|---|
| ●Rated capacity and operational current | 9, 10 |
| ●Application for standard motors | 14 |
| ●Characteristics and performance | 15 |
| ●Auxiliary contact ratings | 10 |
| ●Operating coil ratings | 11 |
| ●Conforming wire size and tightening torque | 27 |
| ●Thermal overload relays | 73 |

## Model explanation

### ●Reversing standard magnetic contactors & starters

RSK — 20 JT C

| Type |
|---|
| RSK ···Reversing model |

| Model | |
|---|---|
| J | H |
| 11 300 | 50 270 |
| 12 400 | 65 |
| 20 | 80 |
| 21 | 95 |
| 26 | 100 |
| 35 | 125 |
| 50 | 150 |
| | 220 |

| J | H | Specifications |
|---|---|---|
| J | H | Magnetic Contactor (without enclosure) |
| JT | HT | Magnetic Starter (without enclosure) |
| JM | HM | Magnetic Starter (with enclosure) |
| JB | HB | Magnetic Contactor (with enclosure) |

| Career mark |
|---|
| Only magnetic starter. However except for 50J, 95H, 270H, 300J, 400J models. |

### ●Reversing magnetic starters with phase-failure protection thermal overload relays

RSK — 20 JGT C

| Type |
|---|
| RSK ···Reversing model |

| Model | |
|---|---|
| J | H |
| 11 300 | 50 270 |
| 12 400 | 65 |
| 20 | 80 |
| 21 | 95 |
| 26 | 100 |
| 35 | 125 |
| 50 | 150 |
| | 220 |

| J | H | Specifications |
|---|---|---|
| JGT | HGT | Magnetic Starter (without enclosure) |
| JGM | HGM | Magnetic Starter (with enclosure) |

| Career mark |
|---|
| Except for 50J, 95H, 270H, 300J, 400J models. |

### ●Reversing magnetic starters with 3-heaters thermal overload relays

RSK — 20 JT — 3 C

| Type |
|---|
| RSK ···Reversing model |

| Model | |
|---|---|
| J | H |
| 11 | 50 |
| 12 | 65 |
| 20 | 80 |
| 21 | 95 |
| 26 | 100 |
| 35 | 125 |
| 50 | 150 |
| | 220 |
| | 270 |

| J | H | Specifications |
|---|---|---|
| JT | HT | Magnetic starter (without enclosure) |
| JM | HM | Magnetic starter (with enclosure) |

| Career mark |
|---|
| Except for 50J, 95H, 270H models. |

## 11J

RSK-11JTC

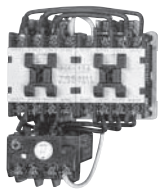

## Ratings

| Frame | | | 11J |
|---|---|---|---|
| Rated capacity | AC-3 (kW) | 240V | 3.7 |
| | | 440V | 4.5 |
| | | 550V | 4.5 |
| | AC-1 (A) (500,000 ops) | 240V | 20 |
| | | 440V | 20 |
| | | 550V | 20 |

## Conforming wire size and tightening torque

| | | Screw size | Conforming wire size | Applicable terminal connector | Tightening torque N·m(kgf·cm) |
|---|---|---|---|---|---|
| Contactor | Main circuit | M3.5 | φ1～1.6 0.5～2mm² | 1.25－3.5 ～ 2－3.5 | 0.8～1.2 (8～12) |
| | Control circuit | | | | |
| Thermal overload relay | Main circuit | M4 | φ1～2 0.5～3.5mm² | 1.25－4 ～ 5.5－4 | 1.2～1.8 (12～18) |
| | Control circuit | M3.5 | φ1～1.6 0.5～2mm² | 1.25－3.5 ～ 2－3.5 | 0.8～1.2 (8～12) |

## Magnetic contactor (open type) RSK-11J

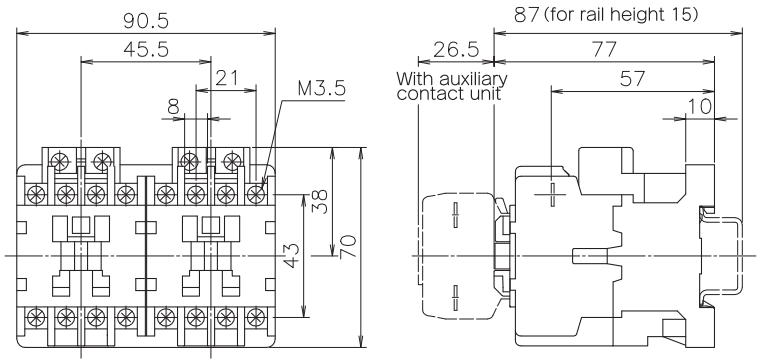


### Contact configuration

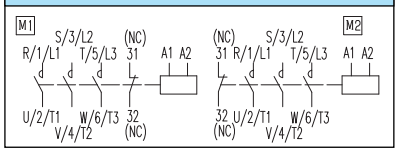


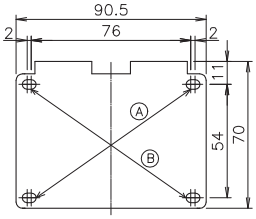


Ⓐ76～80×54 (Recommended mounting hole) (compatible with RSK-6H,11H)

Ⓑ76～80×54

Weight 0.6kg

## Magnetic starter (open type) RSK-11JTC · 11JT-3C · 11JGTC

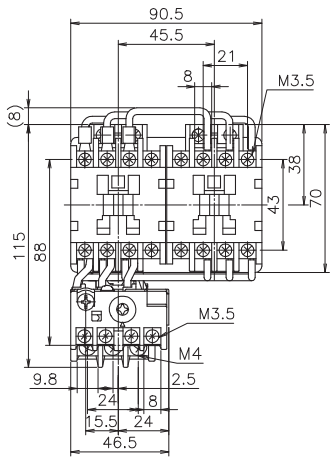


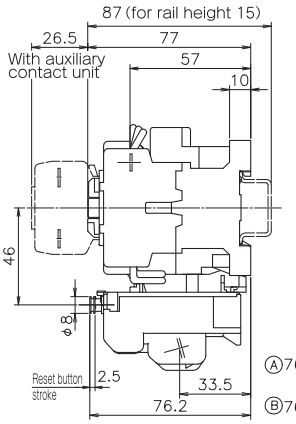


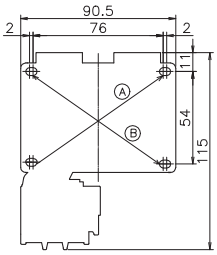


Ⓐ76～80×54 (Recommended mounting point) (compatible with RSK-6H,11H)

Ⓑ76～80×54

### Connection diagram

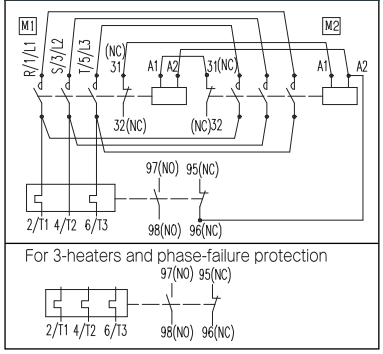


Weight 0.72kg

## Magnetic starter · contactor (enclosed type) RSK-11JMC(JB) · 11JM-3C · 11JGMC

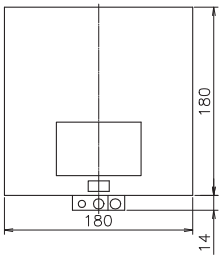


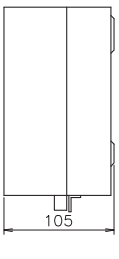


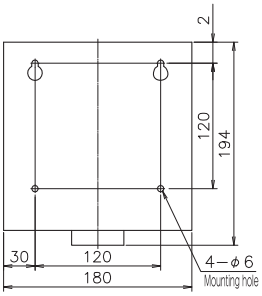


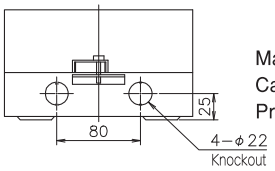


Material: Steel plate
Case color: Munsel No. 5Y7/1
Protection rating: IP20

Weight 11JMC=1.82kg
11JB=1.7kg

※Operation with an outside push button is not possible

### Connection diagram

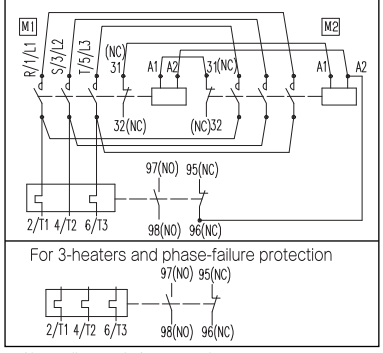


Above diagram is for magnetic starter.

## 12J

RSK-12JTC

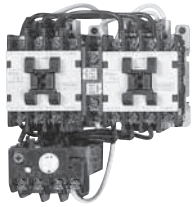

## Ratings

| Frame | | | 12J |
|---|---|---|---|
| Rated capacity | AC-3 (kW) | 240V | 4 |
| | | 440V | 5.5 |
| | | 550V | 5.5 |
| | AC-1 (A) (500,000 ops) | 240V | 26 |
| | | 440V | 26 |
| | | 550V | 26 |

## Conforming wire size and tightening torque

| | | Screw size | Conforming wire size | Applicable terminal connector | Tightening torque N·m(kgf·cm) |
|---|---|---|---|---|---|
| Contactor | Main circuit | M3.5 | φ1～1.6 0.5～2mm² | 1.25－3.5 ～ 2－3.5 | 0.8～1.2 (8～12) |
| | Control circuit | | | | |
| Thermal overload relay | Main circuit | M4 | φ1～2 0.5～3.5mm² | 1.25－4 ～ 5.5－4 | 1.2～1.8 (12～18) |
| | Control circuit | M3.5 | φ1～1.6 0.5～2mm² | 1.25－3.5 ～ 2－3.5 | 0.8～1.2 (8～12) |

## Magnetic contactor (open type) RSK-12J

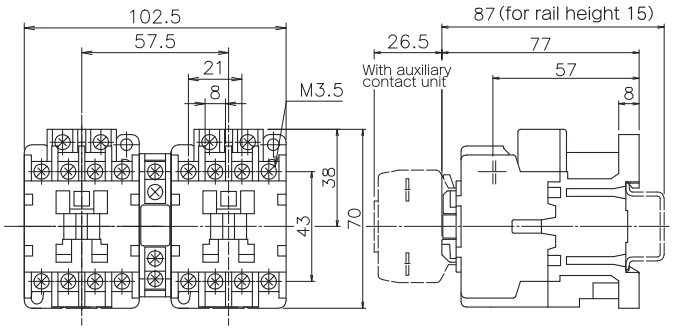


### Contact configuration

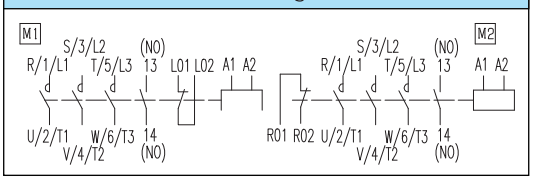


note. LO1,LO2,RO1,RO2 are contacts for exclusive use of electrical interlock.

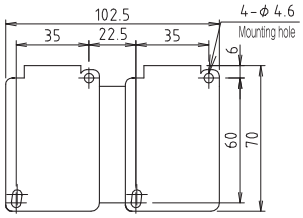


Weight 0.63kg

## Magnetic starter (open type) RSK-12JTC · 12JT-3C · 12JGTC

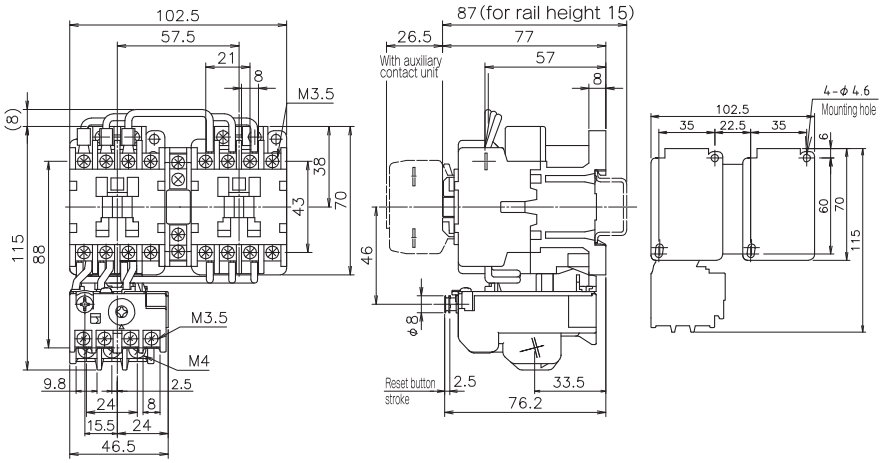


### Connection diagram

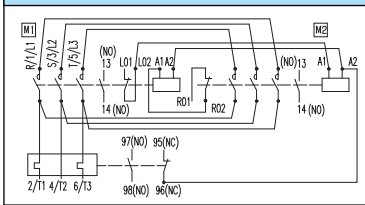


For 3-heaters and phase-failure protection

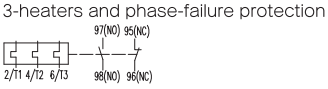


note. LO1,LO2,RO1,RO2 are contacts for exclusive use of electrical interlock.

Weight 0.75kg

## Magnetic starter · contactor (enclosed type) RSK-12JMC(JB) · 12JM-3C · 12JGMC

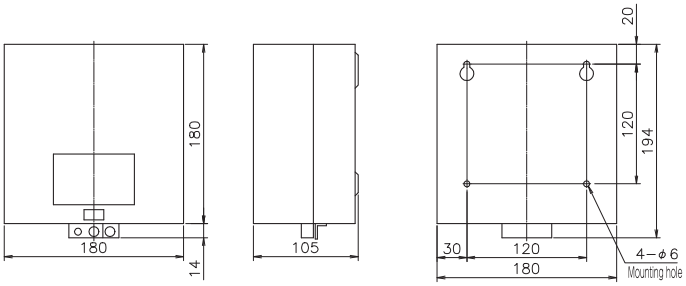


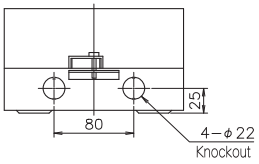


Material: Steel plate
Case color: Munsel No. 5Y7/1
Protection rating: IP20

Weight 12JMC=1.85kg
12JB=1.73kg

### Connection diagram

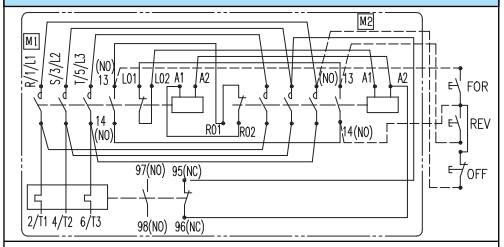


For 3-heaters and phase-failure protection

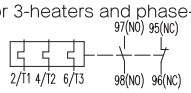


note. LO1,LO2,RO1,RO2 are contacts for exclusive use of electrical interlock.

Dashed lines are not connected.
Above diagram is for magnetic starter.

2

## 20J

RSK-20JTC

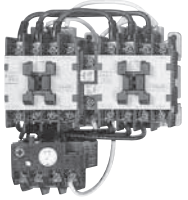

## Ratings

| Frame | | | 20J |
|---|---|---|---|
| Rated capacity | AC-3 (kW) | 240V | 7.5 |
| | | 440V | 11 |
| | | 550V | 11 |
| | AC-1 (A) (500,000 ops) | 240V | 32 |
| | | 440V | 32 |
| | | 550V | 32 |

## Conforming wire size and tightening torque

| | | Screw size | Conforming wire size | Applicable terminal connector | Tightening torque N·m(kgf·cm) |
|---|---|---|---|---|---|
| Contactor | Main cir. Aux cir. | M4 | φ1~2 0.5~3.5mm² | 1.25-4 3.5-4 | 1.2~1.8 (12~18) |
| | Control circuit | M3.5 | φ1~1.6 0.5~2mm² | 1.25-3.5 2-3.5 | 0.8~1.2 (8~12) |
| Thermal overload relay | Main circuit | M4 | φ1~2 0.5~3.5mm² | 1.25-4 3.5-4 | 1.2~1.8 (12~18) |
| | Control circuit | M3.5 | φ1~1.6 0.5~2mm² | 1.25-3.5 2-3.5 | 0.8~1.2 (8~12) |

## Magnetic contactor (open type) RSK-20J

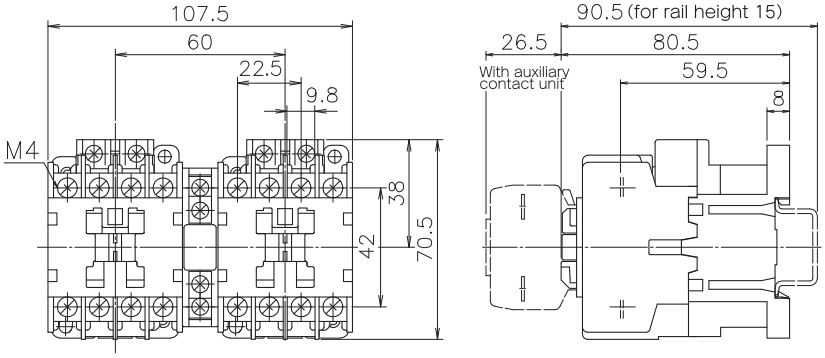


### Contact configuration

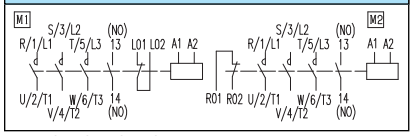


note. LO1,LO2,RO1,RO2 are contacts for exclusive use of electrical interlock.

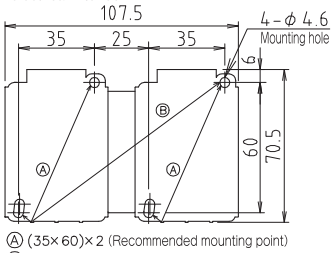


Ⓐ (35×60)×2 (Recommended mounting point)
Ⓑ 95×60 (compatible with RSK-12H,18H)

Weight 0.68kg

## Magnetic starter (open type) RSK-20JTC · 20JT-3C · 20JGTC

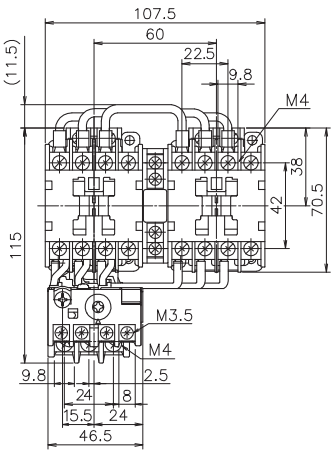


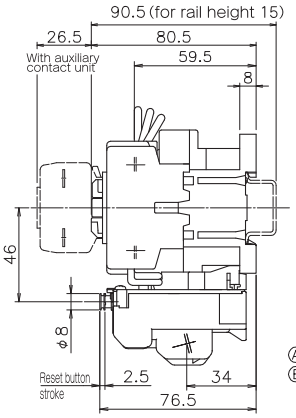


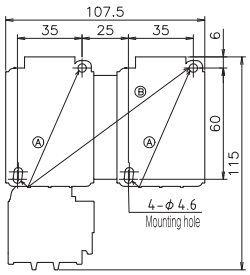


Ⓐ (35×60)×2 (Recommended mounting point)
Ⓑ 95×60 (compatible with RSK-12H,18H)

### Connection diagram

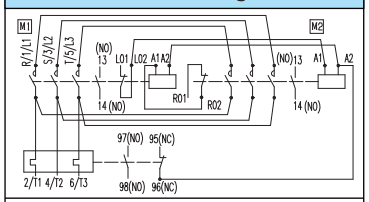


For 3-heaters and phase-failure protection

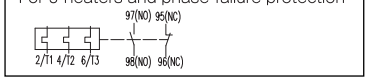


note. LO1,LO2,RO1,RO2 are contacts for exclusive use of electrical interlock.

Weight 0.79kg

## Magnetic starter · contactor (enclosed type) RSK-20JMC(JB) · 20JM-3C · 20JGMC

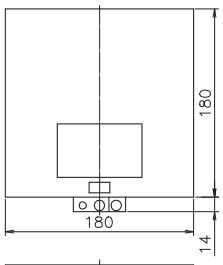


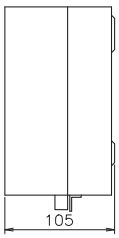


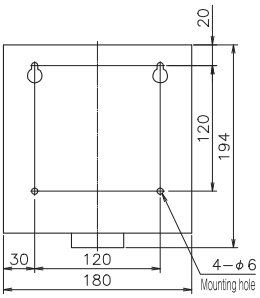


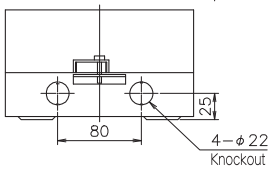


Material: Steel plate
Case color: Munsel No. 5Y7/1
Protection rating: IP20

Weight 20JMC=1.89kg
20JB=1.78kg

### Connection diagram

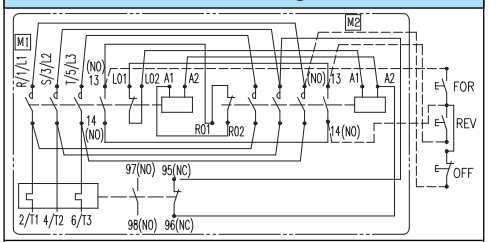


For 3-heaters and phase-failure protection

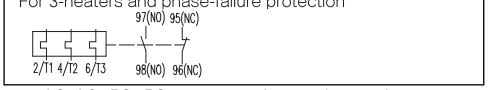


note. LO1,LO2,RO1,RO2 are contacts for exclusive use of electrical interlock.

Dashed lines are not connected.
Above diagram is for magnetic starter.

## 21J

RSK-21JTC

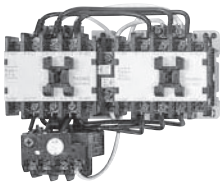

## Ratings

| Frame | | | 21J |
|---|---|---|---|
| Rated capacity | AC-3 (kW) | 240V | 7.5 |
| | | 440V | 11 |
| | | 550V | 11 |
| | AC-1 (A) (500,000ops) | 240V | 32 |
| | | 440V | 32 |
| | | 550V | 32 |

## Conforming wire size and tightening torque

| | | Screw size | Conforming wire size | Applicable terminal connector | Tightening torque N·m(kgf·cm) |
|---|---|---|---|---|---|
| Contactor | Main circuit | M4 | φ1～2 0.5～3.5mm² | 1.25-4 ～ 3.5-4 | 1.2～1.8 (12～18) |
| | Control circuit | M3.5 | φ1～1.6 0.5～2mm² | 1.25-3.5 ～ 2-3.5 | 0.8～1.2 (8～12) |
| Thermal overload relay | Main circuit | M4 | φ1～2 0.5～3.5mm² | 1.25-4 ～ 3.5-4 | 1.2～1.8 (12～18) |
| | Control circuit | M3.5 | φ1～1.6 0.5～2mm² | 1.25-3.5 ～ 2-3.5 | 0.8～1.2 (8～12) |

## Magnetic contactor (open type) RSK-21J

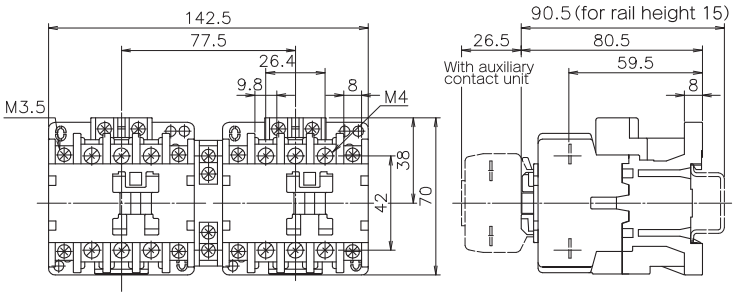


### Contact configuration

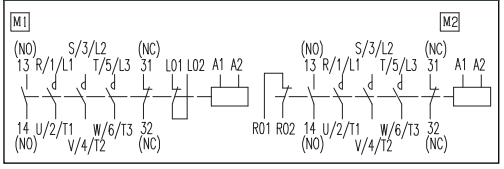


note. LO1,LO2,RO1,RO2 are contacts for exclusive use of electrical interlock.

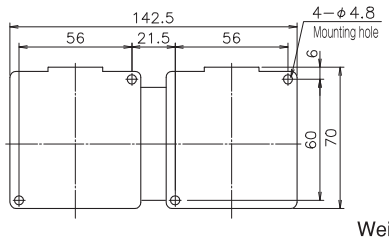


Weight 0.75kg

## Magnetic starter (open type) RSK-21JTC · 21JT-3C · 21JGTC

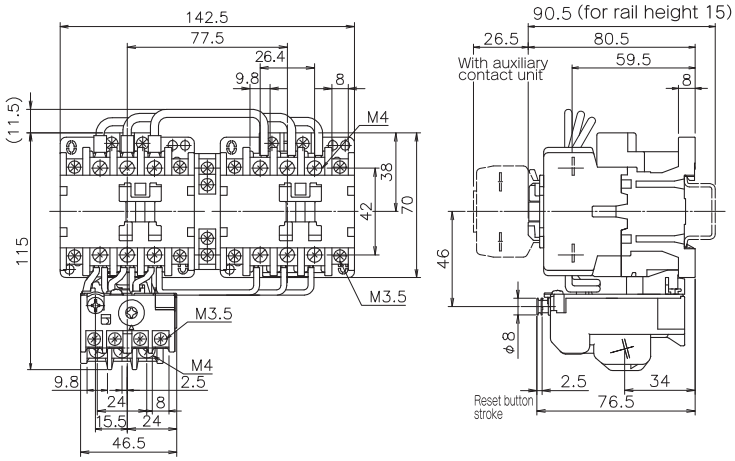


### Connection diagram

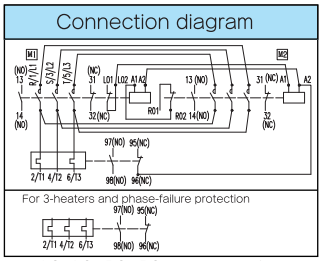


note. LO1,LO2,RO1,RO2 are contacts for exclusive use of electrical interlock.

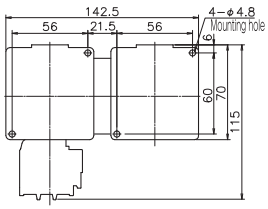


Weight 0.97kg

## Magnetic starter · contactor (enclosed type) RSK-21JMC(JB) · 21JM-3C · 21JGMC

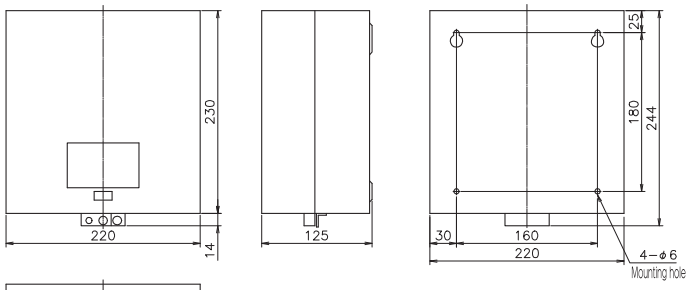


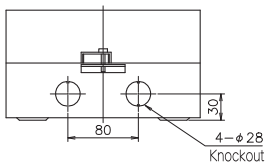


Material: Steel plate
Case color: Munsel No. 5Y7/1
Protection rating: IP20

Weight 21JMC=2.72kg
21JB=2.5kg

### Connection diagram

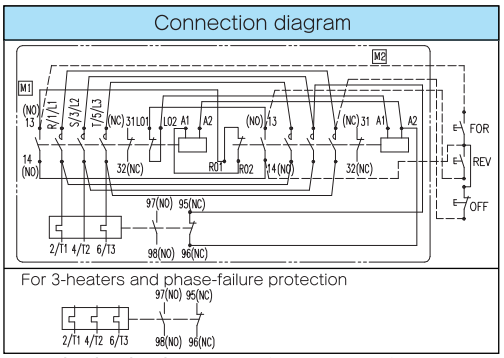


note. LO1,LO2,RO1,RO2 are contacts for exclusive use of electrical interlock.

Dashed lines are not connected.
Above diagram is for magnetic starter.

2

## 26J・35J・50J

RSK-26JTC·35JTC·50JT

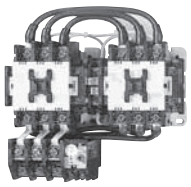

## Ratings

| Frame | | | 26J | 35J | 50J |
|---|---|---|---|---|---|
| Rated capacity | AC-3 (kW) | 240V | 10 | 15 | 18.5 |
| | | 440V | 20 | 26 | 30 |
| | | 550V | 20 | 26 | 30 |
| | AC-1 (A) (500,000 ops) | 240V | 50 | 60 | 65 |
| | | 440V | 50 | 60 | 65 |
| | | 550V | 50 | 60 | 65 |

## Conforming wire size and tightening torque

| | | Screw size | Conforming wire size | Applicable terminal connector | Tightening torque N·m(kgf·cm) |
|---|---|---|---|---|---|
| Contactor | Main circuit | M5 | φ1.6~3.2<br>1.25~14mm² | 1.25~5<br>14~5 | 2.4~3.5<br>(24~36) |
| | Control circuit | M3.5 | φ1~1.6<br>0.5~2mm² | 1.25~3.5<br>2~3.5 | 0.8~1.2<br>(8~12) |
| Thermal overload relay | Main circuit | M5 | φ1.6~3.2<br>1.25~14mm² | 1.25~5<br>14~5 | 2.4~3.5<br>(24~36) |
| | Control circuit | M3.5 | φ1~1.6<br>0.5~2mm² | 1.25~3.5<br>2~3.5 | 0.8~1.2<br>(8~12) |

## Magnetic contactor (open type) RSK-26J・35J・50J

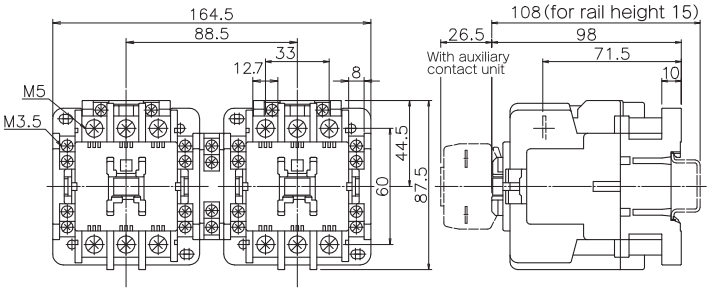


### Contact configuration

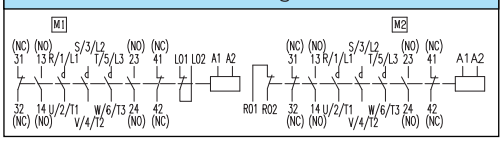

note. LO1,LO2,RO1,RO2 are contacts for exclusive use of electrical interlock.

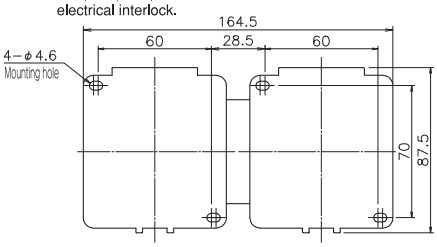


Weight 26J·35J·50J=1.4kg

## Magnetic starter (open type) RSK-26JTC・35JTC・50JT・26JT-3C・35JT-3C・50JT-3・26JGTC・35JGTC・50JGT

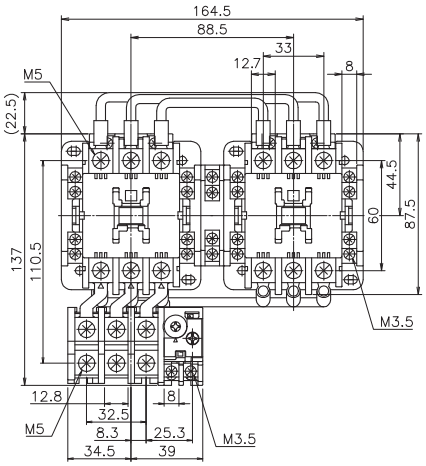


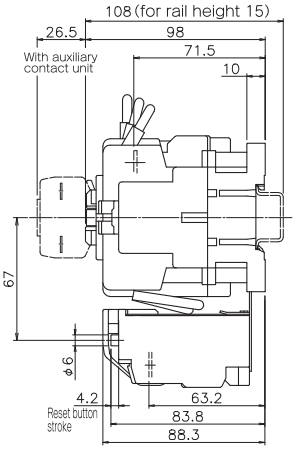


### Connection diagram

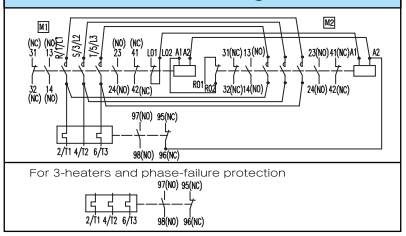


note. LO1,LO2,RO1,RO2 are contacts for exclusive use of electrical interlock.

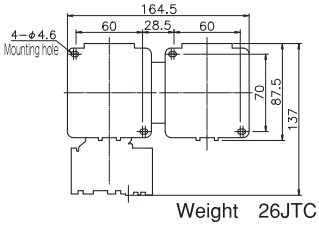


Weight 26JTC·35JTC·50JT=1.75kg

## Magnetic starter・contactor (enclosed type) RSK-26JMC(JB)・35JMC(JB)・50JM(JB)・26JM-3C・35JM-3C・50JM-3・26JGMC・35JGMC・50JGM

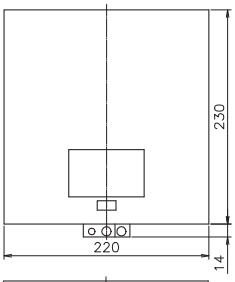


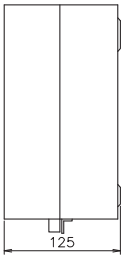


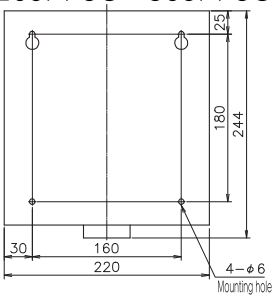


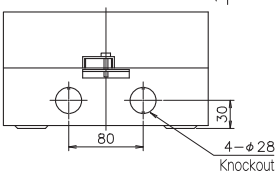


Material: Steel plate
Case color: Munsel No. 5Y7/1
Protection rating: IP20

### Connection diagram

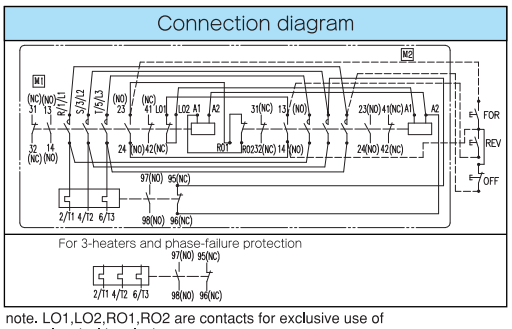


note. LO1,LO2,RO1,RO2 are contacts for exclusive use of electrical interlock.
Dashed lines are not connected.
Above diagram is for magnetic starter.

Weight 26JMC·35JMC·50JM=3.5kg
26JB·35JB·50JB=3.15kg

## 50H・65H

RSK-50HTC·65HTC

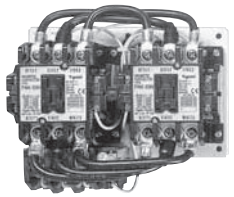

## Ratings

| Frame | | | 50H | 65H |
|---|---|---|---|---|
| Rated capacity | AC-3 (kW) | 240V | 18.5 | 22 |
| | | 440V | 30 | 37 |
| | | 550V | 30 | 37 |
| | AC-1 (A) (500,000 ops) | 240V | 75 | 90 |
| | | 440V | 75 | 90 |
| | | 550V | 75 | 90 |

## Conforming wire size and tightening torque

| | | Screw size | Conforming wire size | Applicable terminal connector | Tightening torque N·m(kgf·cm) |
|---|---|---|---|---|---|
| Contactor | Main circuit | M6 | 2～38mm² Using crimped terminals | 2－6 ～ 38－6S | 3.9～5.9 (40～60) |
| | Control circuit | M3.5 | φ1～1.6 0.5～2mm² | 1.25－3.5 ～ 2－3.5 | 0.8～1.2 (8～12) |
| Thermal overload relay | Main circuit | M6 | 2～38mm² Using crimped terminals | 2－6 ～ 38－6S | 3.9～5.9 (40～60) |
| | Control circuit | M3.5 | φ1～1.6 0.5～2mm² | 1.25－3.5 ～ 2－3.5 | 0.8～1.2 (8～12) |

## Magnetic contactor (open type) RSK-50H・65H

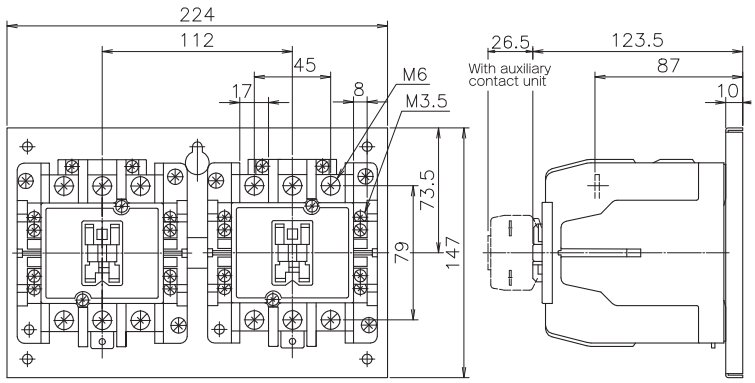


### Contact configuration

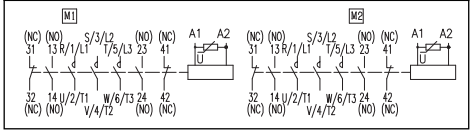

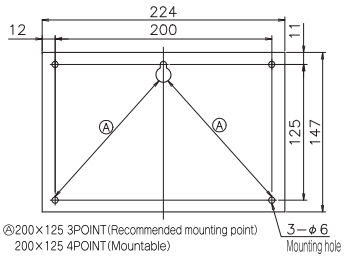


Weight 50H=3.22kg 65H=3.42kg

## Magnetic starter (open type) RSK-50HTC・65HTC・50HT-3C・65HT-3C・50HGTC・65HGTC

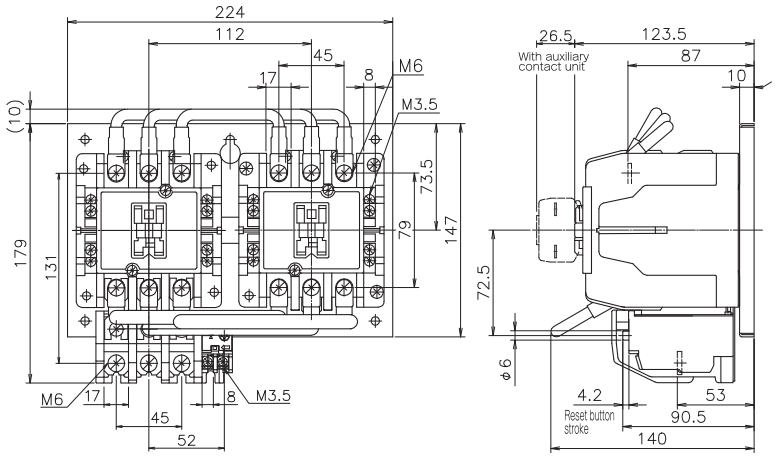


### Connection diagram

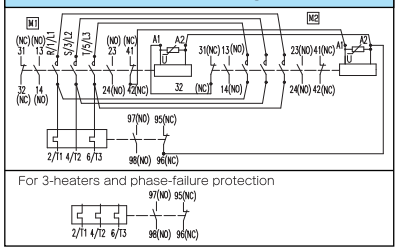


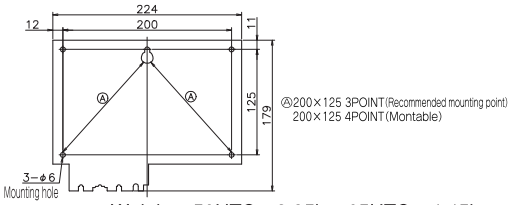


Weight 50HTC=3.95kg 65HTC=4.45kg

## Magnetic starter・contactor (enclosed type) RSK-50HMC(HB)・65HMC(HB)・50HM-3C・65HM-3C・50HGMC・65HGMC

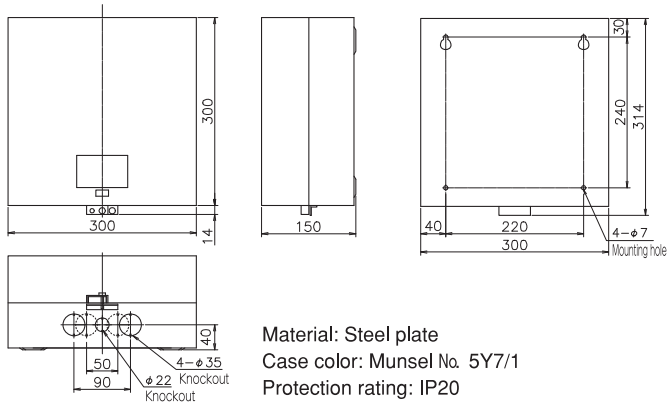


Material: Steel plate
Case color: Munsel No. 5Y7/1
Protection rating: IP20

### Connection diagram

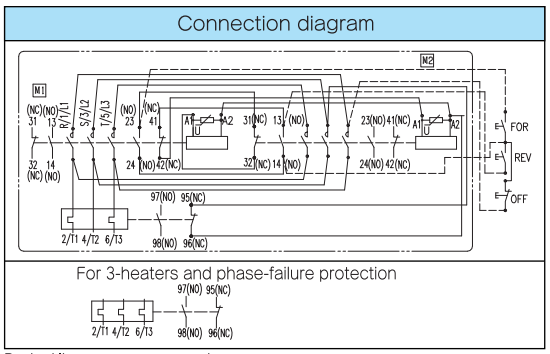


Dashed lines are not connected.
Above diagram is for magnetic starter.

Weight 50HMC=6.91kg・65HMC=7.41kg
50H B=6.18kg・65H B=6.38kg

## 80H・95H

RSK-80HTC・95HT

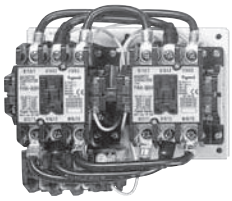

## Ratings

| Frame | | | 80H | 95H |
|---|---|---|---|---|
| Rated capacity | AC-3 (kW) | 240V | 25 | 27 |
| | | 440V | 45 | 55 |
| | | 550V | 45 | 55 |
| | AC-1 (A) (500,000 ops) | 240V | 110 | 110 |
| | | 440V | 110 | 110 |
| | | 550V | 110 | 110 |

## Conforming wire size and tightening torque

| | | Screw size | Conforming wire size | Applicable terminal connector | Tightening torque N·m(kgf·cm) |
|---|---|---|---|---|---|
| Contactor | Main circuit | M6 | 2～38mm² Using crimped terminals | 2－6 ～ 38－6S | 3.9～5.9 (40～60) |
| | Control circuit | M3.5 | φ1～1.6 0.5～2mm² | 1.25－3.5 ～ 2－3.5 | 0.8～1.2 (8～12) |
| Thermal overload relay | Main circuit | M6 | 2～38mm² Using crimped terminals | 2－6 ～ 38－6S | 3.9～5.9 (40～60) |
| | Control circuit | M3.5 | φ1～1.6 0.5～2mm² | 1.25－3.5 ～ 2－3.5 | 0.8～1.2 (8～12) |

## Magnetic contactor (open type) RSK-80H・95H

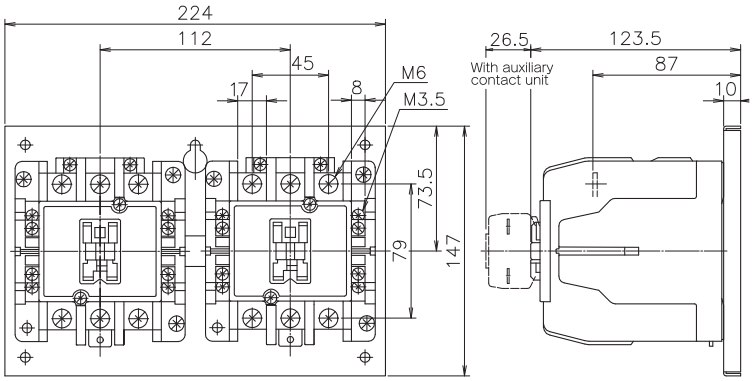


### Contact configuration

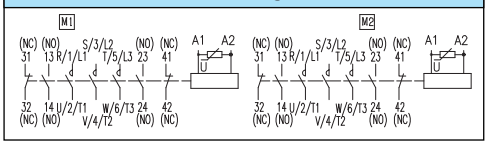


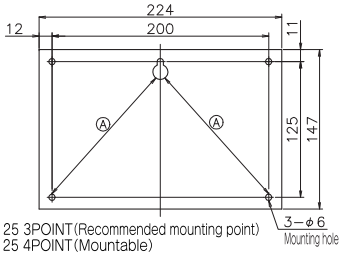


Weight 80H・95H＝3.42kg

## Magnetic starter (open type) RSK-80HTC・95HT・80HT-3C・95HT-3・80HGTC・95HGT

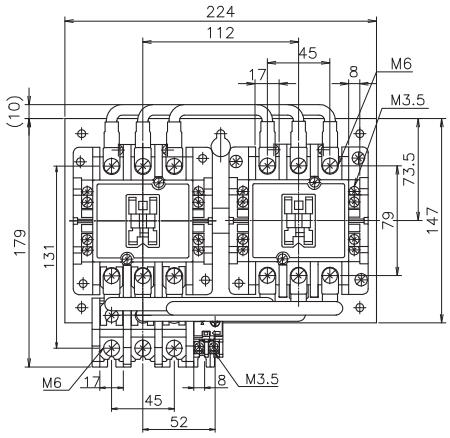


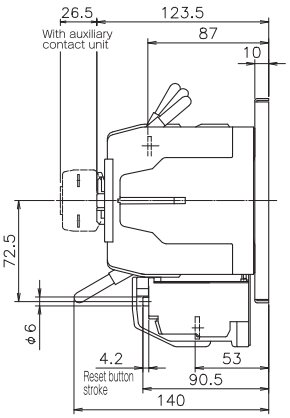


### Connection diagram

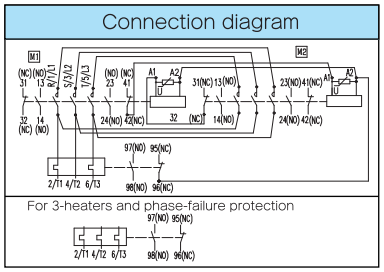


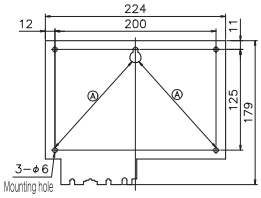


Ⓐ200×125 3POINT(Recommended mounting point)
200×125 4POINT(Mountable)

Weight 80HTC・95HT＝4.45kg

## Magnetic starter・contactor (enclosed type) RSK-80HMC(HB)・95HM(HB)・80HM-3C・95HM-3・80HGMC・95HGM

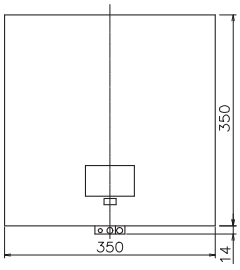


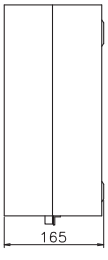


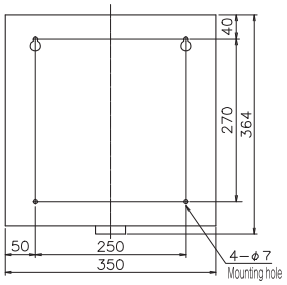


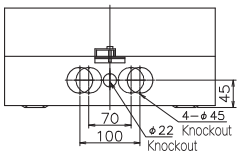


Material: Steel plate
Case color: Munsel No. 5Y7/1
Protection rating: IP20

### Connection diagram

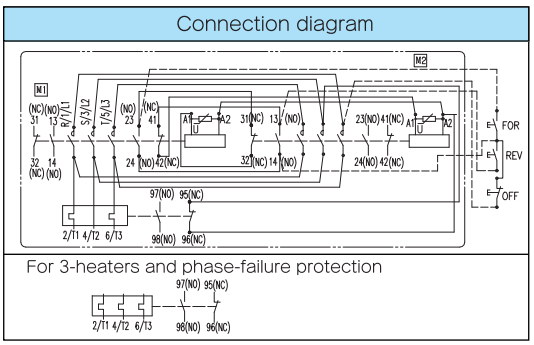


Dashed lines are not connected.
Above diagram is for magnetic starter.

Weight 80HMC・95HM＝8.4kg
80HB・95HB＝7.37kg

## 100H

RSK-100HTC

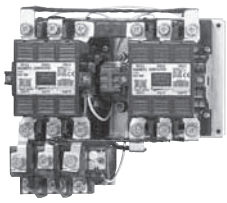

## Ratings

| Frame | | | 100H |
|---|---|---|---|
| Rated capacity | AC-3 (kW) | 240V | 37 |
| | | 440V | 55 |
| | | 550V | 55 |
| | AC-1 (A) (500,000 ops) | 240V | 150 |
| | | 440V | 150 |
| | | 550V | 150 |

## Conforming wire size and tightening torque

| | | Screw size | Conforming wire size | Applicable terminal connector | Tightening torque N·m(kgf·cm) |
|---|---|---|---|---|---|
| Contactor | Main circuit | M8 | 2～80mm² Using crimped terminals | 2－8 ～ CB80－8 | 9.0～13.5 (92～138) |
| | Control circuit | M3.5 | φ1～1.6 0.5～2mm² | 1.25－3.5 ～ 2－3.5 | 0.8～1.2 (8～12) |
| Thermal overload relay | Main circuit | M8 | 2～80mm² Using crimped terminals | 2－8 ～ CB80－8 | 9.0～13.5 (92～138) |
| | Control circuit | M3.5 | φ1～1.6 0.5～2mm² | 1.25－3.5 ～ 2－3.5 | 0.8～1.2 (8～12) |

## Magnetic contactor (open type) RSK-100H

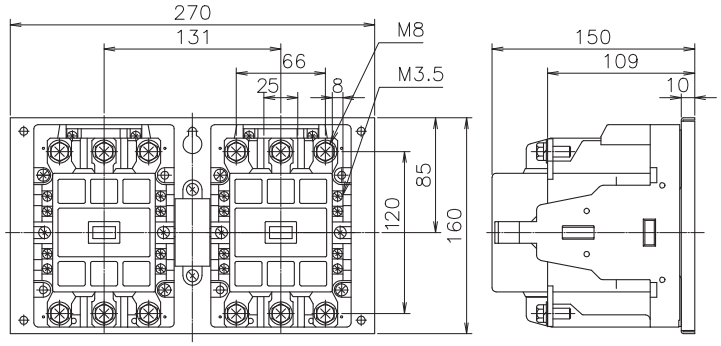


### Contact configuration

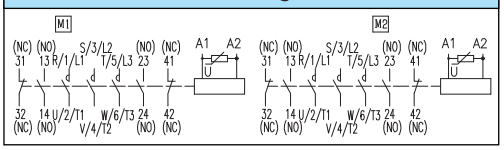


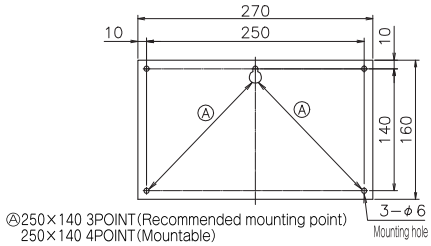


Ⓐ250×140 3POINT (Recommended mounting point)
250×140 4POINT (Mountable)

Weight 6.8kg

## Magnetic starter (open type) RSK-100HTC · 100HT-3C · 100HGTC

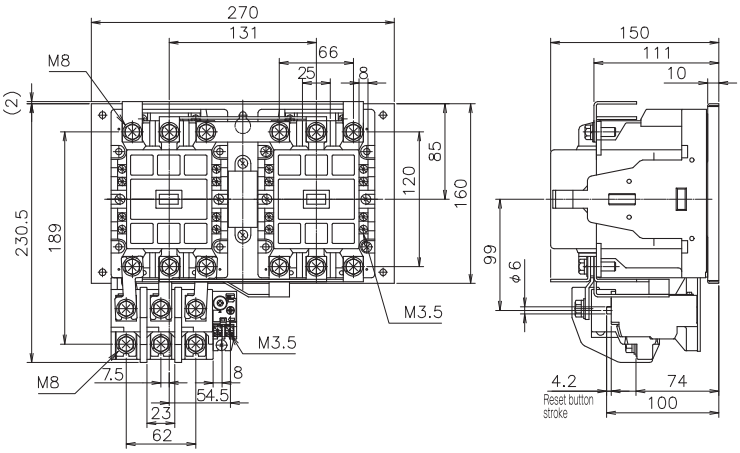


### Connection diagram

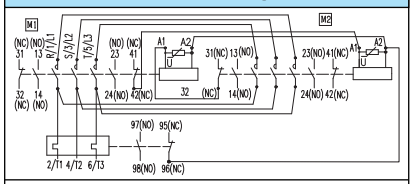


For 3-heaters and phase-failure protection

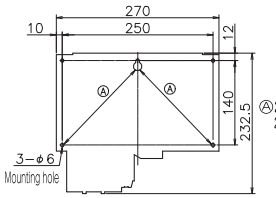


Ⓐ250×140 3POINT (Recommended mounting point)
250×140 4POINT (Mountable)

Weight 8.1kg

## Magnetic starter · contactor (enclosed type) RSK-100HMC(HB) · 100HM-3C · 100HGMC

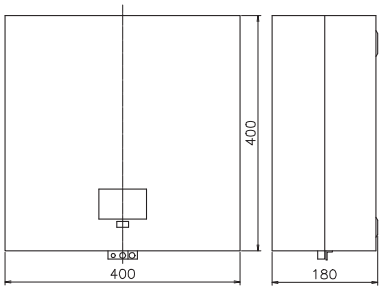


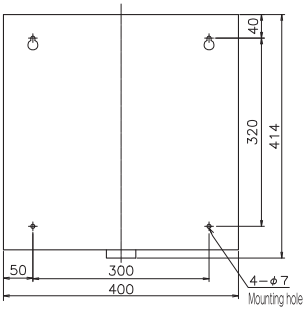


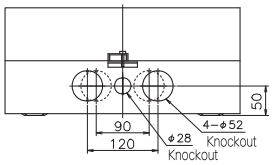


Material: Steel plate
Case color: Munsel No. 5Y7/1
Protection rating: IP20

### Connection diagram

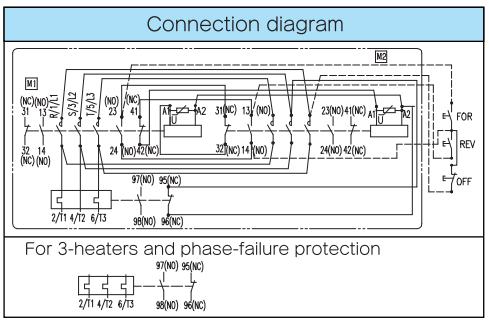


For 3-heaters and phase-failure protection




Dashed lines are not connected.
Above diagram is for magnetic starter.

Weight 100HMC=14.3kg
100HB=13.0kg

## 125H

RSK-125HTC

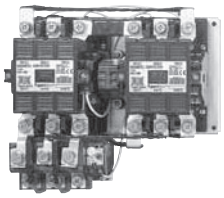

## Ratings

| Frame | | | 125H |
|---|---|---|---|
| Rated capacity | AC-3 (kW) | 240V | 45 |
| | | 440V | 60 |
| | | 550V | 70 |
| | AC-1 (A) (500,000 ops) | 240V | 170 |
| | | 440V | 170 |
| | | 550V | 170 |

## Conforming wire size and tightening torque

| | | Screw size | Conforming wire size | Applicable terminal connector | Tightening torque N·m(kgf·cm) |
|---|---|---|---|---|---|
| Contactor | Main circuit | M8 | 2～80mm² Using crimped terminals | 2-8 ～ CB80-8 | 9.0～13.5 (92～138) |
| | Control circuit | M3.5 | φ1～1.6 0.5～2mm² | 1.25-3.5 ～ 2-3.5 | 0.8～1.2 (8～12) |
| Thermal overload relay | Main circuit | M8 | 2～80mm² Using crimped terminalss | 2-8 ～ CB80-8 | 9.0～13.5 (92～138) |
| | Control circuit | M3.5 | φ1～1.6 0.5～2mm² | 1.25-3.5 ～ 2-3.5 | 0.8～1.2 (8～12) |

## Magnetic contactor (open type) RSK-125H

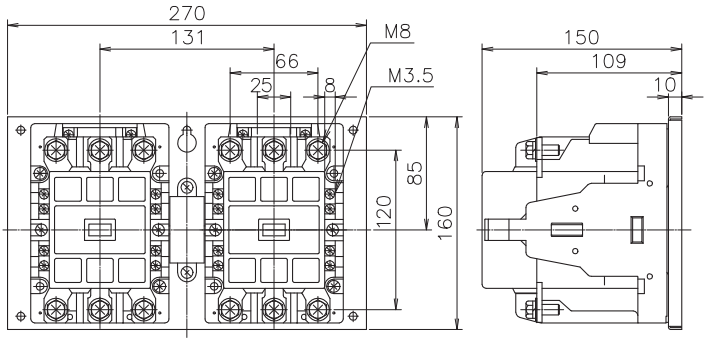


### Contact configuration

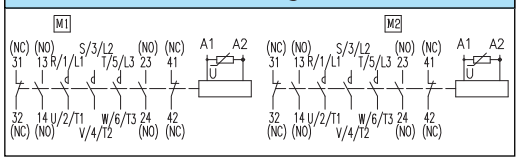


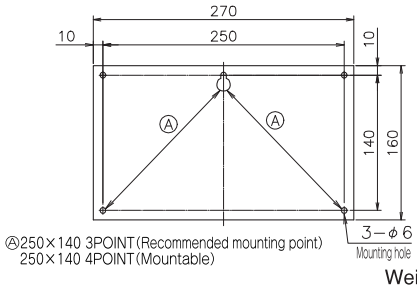


Ⓐ250×140 3POINT (Recommended mounting point)
250×140 4POINT (Mountable)

Weight 6.8kg

## Magnetic starter (open type) RSK-125HTC · 125HT-3C · 125HGTC

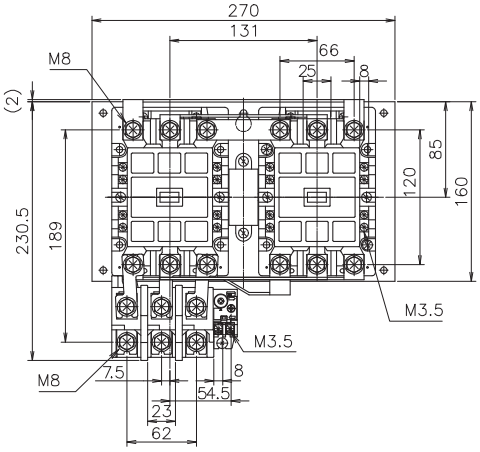


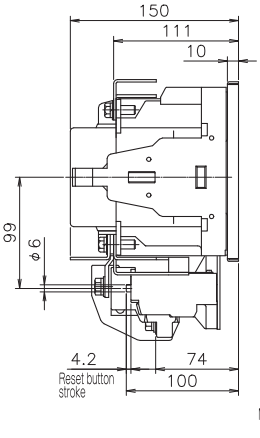


### Connection diagram

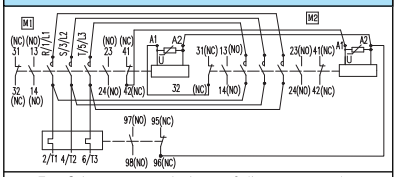


For 3-heaters and phase-failure protection

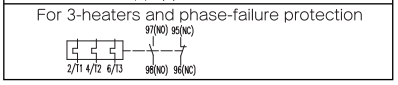


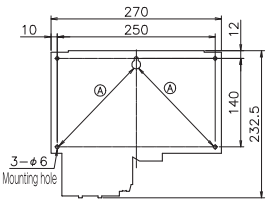


Ⓐ250×140 3POINT (Recommended mounting point)
250×140 4POINT (Mountable)

Weight 8.1kg

## Magnetic starter · contactor (enclosed type) RSK-125HMC(HB) · 125HM-3C · 125HGMC

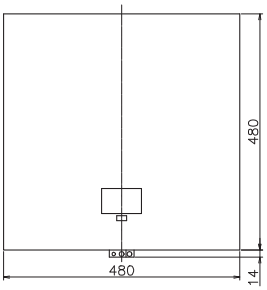


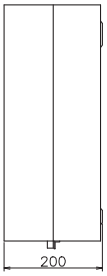


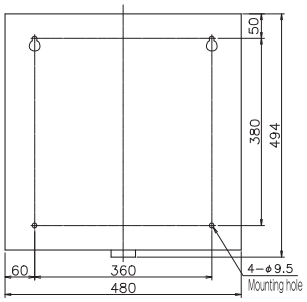


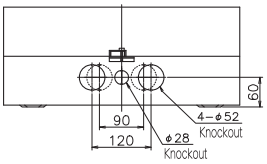


Material: Steel plate
Case color: Munsel No. 5Y7/1
Protection rating: IP20

### Connection diagram

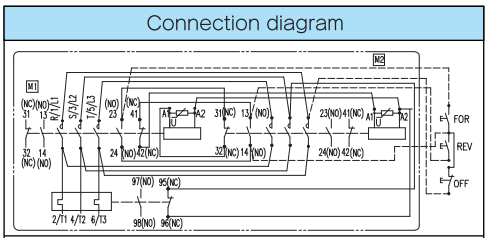


For 3-heaters and phase-failure protection

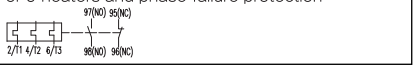


Dashed lines are not connected.
Above diagram is for magnetic starter.

Weight 125HMC=18.0kg
125HB=16.7kg

## 150H

RSK-150HTC

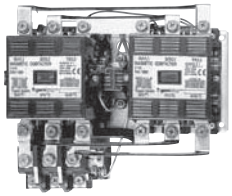

## Ratings

| Frame | | | 150H |
|---|---|---|---|
| Rated capacity | AC-3 (kW) | 240V | 60 |
| | | 440V | 75 |
| | | 550V | 75 |
| | AC-1(A) (500,000 ops) | 240V | 220 |
| | | 440V | 220 |
| | | 550V | 220 |

## Conforming wire size and tightening torque

| | | Screw size | Conforming wire size | Applicable terminal connector | Tightening torque N·m(kgf·cm) |
|---|---|---|---|---|---|
| Contactor | Main circuit | M8 | 2~100mm² Using crimped erminals | 2-8 ~ CB100-8 | 9.0~13.5 (92~138) |
| | Control circuit | M3.5 | φ1~1.6 0.5~2mm² | 1.25-3.5 ~ 2-3.5 | 0.8~1.2 (8~12) |
| Thermal overload relay | Main circuit | M8 | 2~100mm² Using crimped terminals | 2-8 ~ CB100-8 | 9.0~13.5 (92~138) |
| | Control circuit | M3.5 | φ1~1.6 0.5~2mm² | 1.25-3.5 ~ 2-3.5 | 0.8~1.2 (8~12) |

## Magnetic contactor (open type) RSK-150H

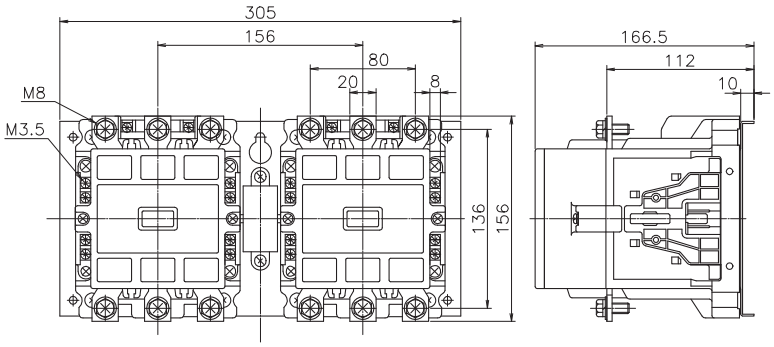


### Contact configuration

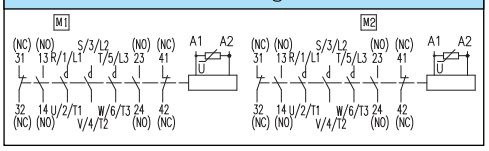


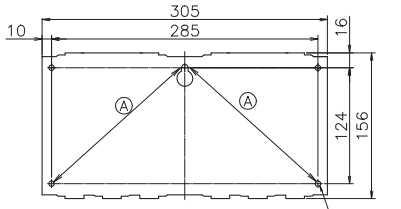


Ⓐ285×124 3POINT(Recommended mounting point)
285×124 4POINT(Mountable)

Weight 8.68kg

## Magnetic starter (open type) RSK-150HTC · 150HT-3C · 150HGTC

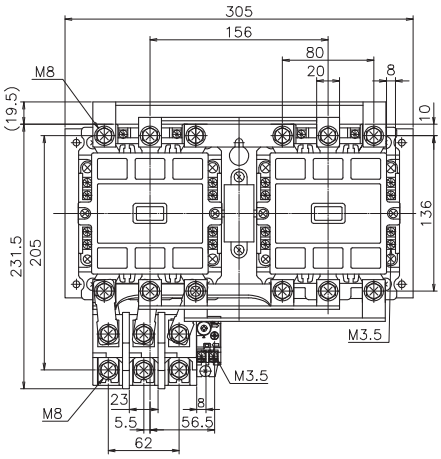


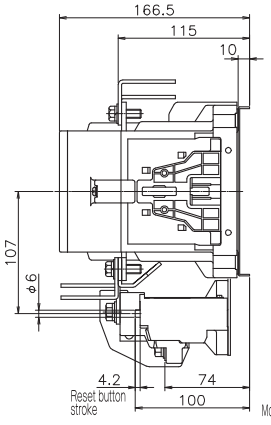


### Connection diagram

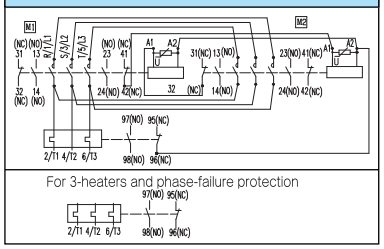


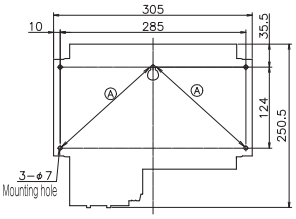


Ⓐ285×124 3POINT(Recommended mounting point)
285×124 4POINT(Mountable)

Weight 9.75kg

## Magnetic starter · contactor (enclosed type) RSK-150HMC(HB) · 150HM-3C · 150HGMC

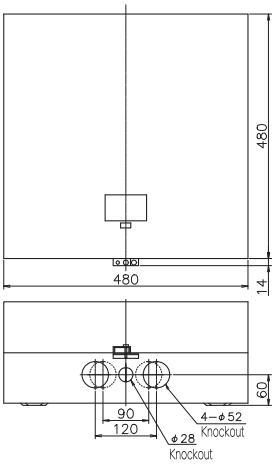


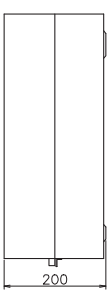


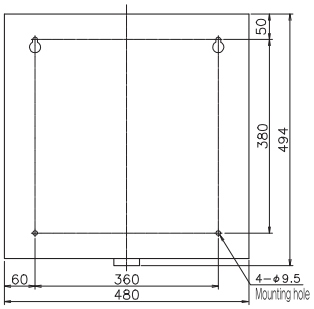


Material: Steel plate
Case color: Munsell No. 5Y7/1
Protection rating: IP20

### Connection diagram

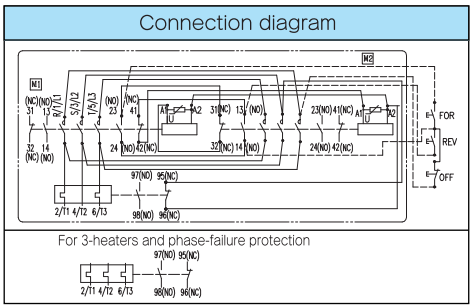


Dashed lines are not connected.
Above diagram is for magnetic starter.

Weight 150HMC=19.8kg
150HB=18.7kg

2

## 220H・270H

RSK-220HTC・270HT

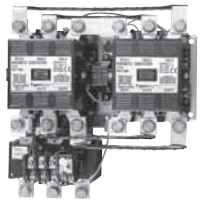

## Ratings

| Frame | | | 220H | 270H |
|---|---|---|---|---|
| Rated capacity | AC-3 (kW) | 240V | 80 | 90 |
| | | 440V | 90 | 132 |
| | | 550V | 90 | 132 |
| | AC-1 (A) (500,000 ops) | 240V | 275 | 310 |
| | | 440V | 275 | 310 |
| | | 550V | 275 | 310 |

## Conforming wire size and tightening torque

| | | Screw size | Conforming wire size | Applicable terminal connector | Tightening torque N·m(kgf·cm) |
|---|---|---|---|---|---|
| Contactor | Main circuit | M10 | 2~150mm² Using crimped terminals | 2-10 ~ CB150-10 | 18.1~27 (185~275) |
| | Control circuit | M3.5 | φ1~1.6 0.5~2mm² | 1.25-3.5 ~ 2-3.5 | 0.8~1.2 (8~12) |
| Thermal overload relay | Main circuit | M10 | 2~150mm² Using crimped terminals | 2-10 ~ CB150-10 | 18.1~27 (185~275) |
| | Control circuit | M3.5 | φ1~1.6 0.5~2mm² | 1.25-3.5 ~ 2-3.5 | 0.8~1.2 (8~12) |

## Magnetic contactor (open type) RSK-220H・270H

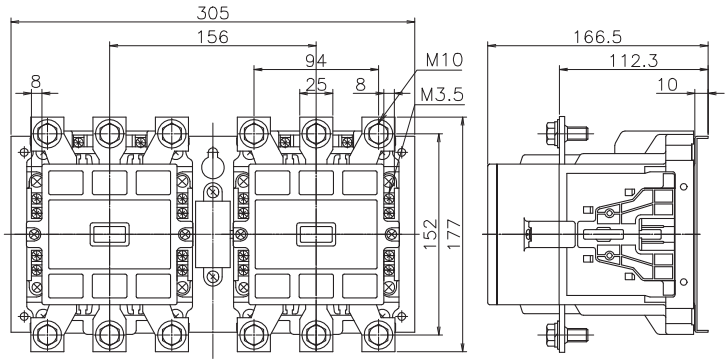


### Contact configuration

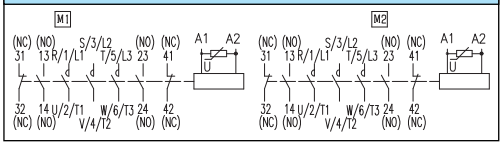


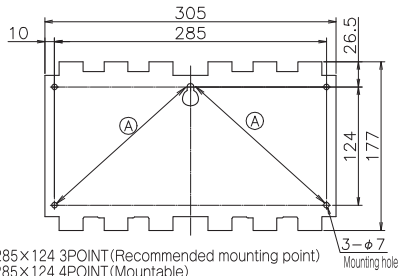


Ⓐ285×124 3POINT(Recommended mounting point)
285×124 4POINT(Mountable)

Weight 220H・270H=9.9kg

## Magnetic starter (open type) RSK-220HTC・270HT・220HT-3C・270HT-3・220HGTC・270HGT

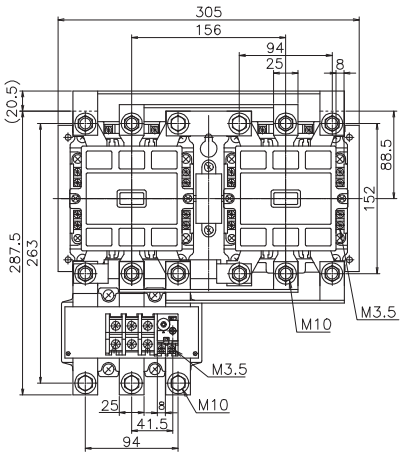


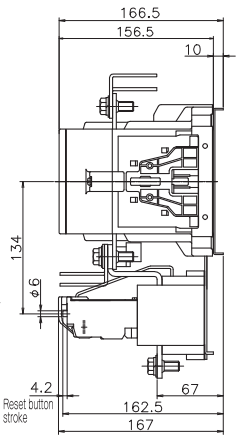


### Connection diagram

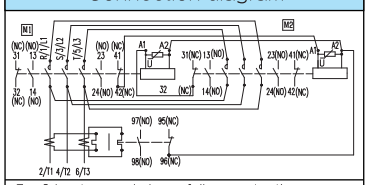


For 3-heaters and phase-failure protection

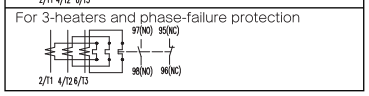


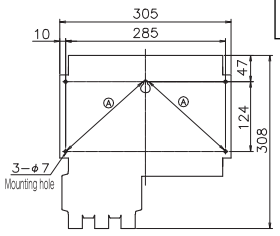


Ⓐ285×124 3POINT(Recommended mounting point)
285×124 4POINT(Mountable)

Weight 220HTC・270HT=12.4kg

## Magnetic starter・contactor (enclosed type) RSK-220HMC(HB)・270HM(HB)・220HM-3C・270HM-3C・220HGMC・270HGM

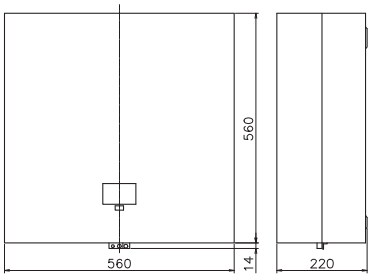


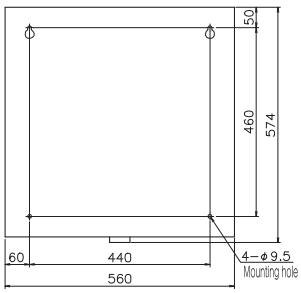


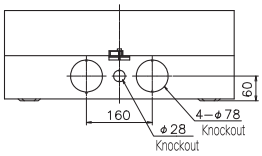


Material: Steel plate
Case color: Munsell No. 5Y7/1
Protection rating: IP20

Weight 220HMC・270HM=22.4kg
220HB・270HB=19.9kg

### Connection diagram

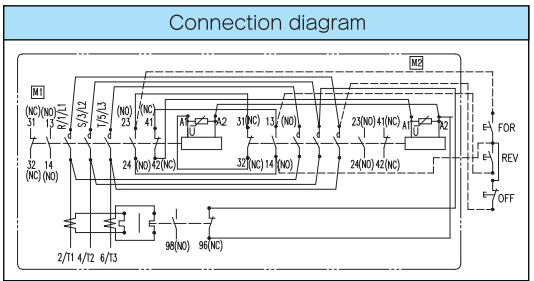


For 3-heaters and phase-failure protection

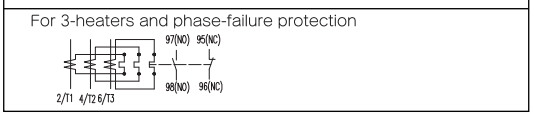


Dashed lines are not connected.
Above diagram is for magnetic starter.

# Reversing Model



## 300J・400J

RSK-300JT・400JT

No image

## Ratings

| Frame | | | 300J | 400J |
|---|---|---|---|---|
| Rated capacity | AC-3 (kW) | 220V | 90 | 115 |
| | | 440V | 150 | 200 |
| | | 550V | 160 | 200 |
| | AC-1(A) (500,000 ops) | 220V | 350 | 420 |
| | | 440V | 350 | 420 |
| | | 550V | — | — |

## Conforming wire size and tightening torque

| | | Screw size | Conforming wire size | Applicable terminal connector | Tightening torque N·m(kgf·cm) |
|---|---|---|---|---|---|
| Contactor | Main circuit | M12 | 2～200㎟ | 2-12 ～ 200-12 | 35～45 (350～450) |
| | Control circuit | M3.5 | φ1～1.6 0.5～2㎟ | 1.25-3.5 ～ 2-3.5 | 0.8～1.0 (8～10) |
| Thermal overload relay | Main circuit | M10 | 2～200㎟ | 2-12 ～ 200-12 | 35～45 (350～450) |
| | Control circuit | M3.5 | φ1～1.6 0.5～2㎟ | 1.25-3.5 ～ 2-3.5 | 0.8～1.0 (8～10) |

## Magnetic contactor (open type) RSK-300J・400J

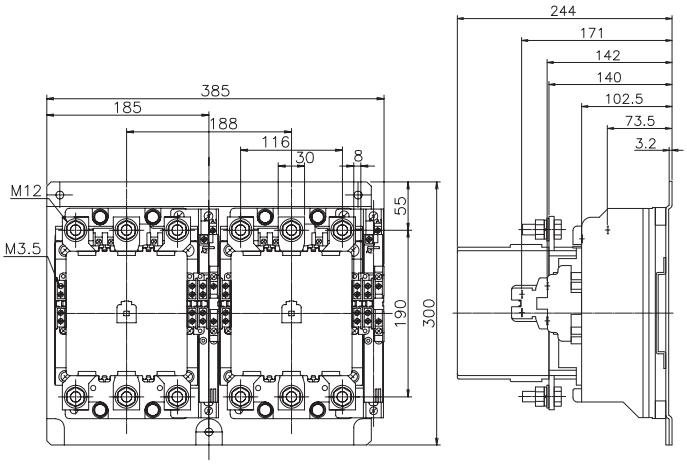


### Contact configuration

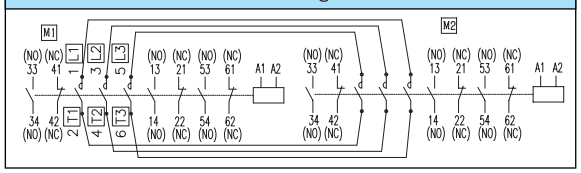


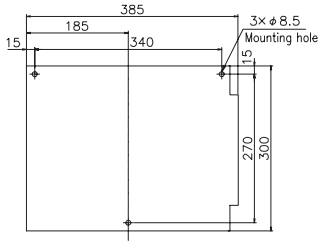


Weight 25kg

## Magnetic starter (open type) RSK-300JT・400JT・300JGT・400JGT

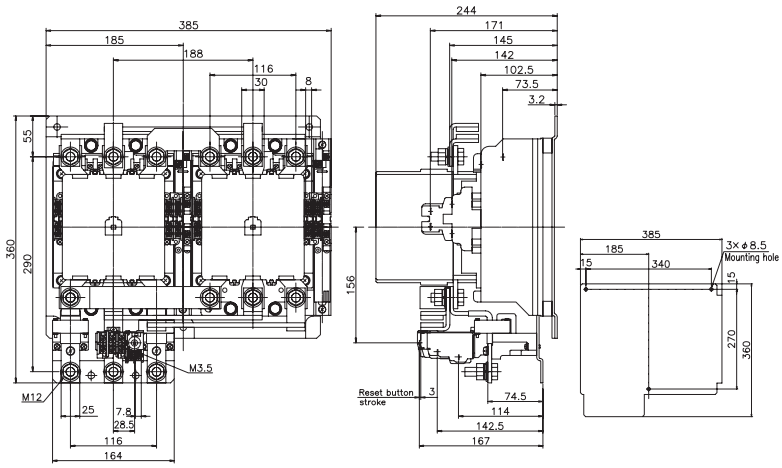


### Connection diagram

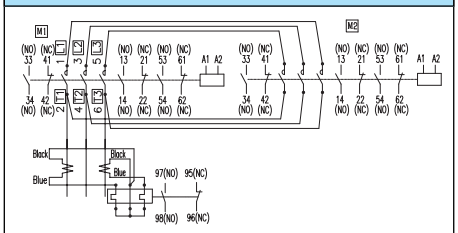


For phase-failure protection

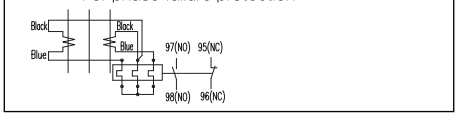


Weight 30kg

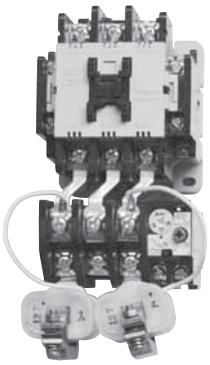

## Features

Motors used in high-inertia blowers, fans, centrifuges and similar machinery have long starting times, and standard thermal overload relays will often trip unnecessarily. The slow-trip thermal overload relay is highly suitable for overload protection of these high-inertia motors.

## Model explanation

PAK — 21 JT 20 — SL2 C

| Type |
|---|
| PAK ···Non-reversing model |

| Model | | | |
|---|---|---|---|
| J | | H | |
| 11 | 35 | 50 | 125 |
| 12 | 50 | 65 | 150 |
| 20 | | 80 | |
| 21 | | 95 | |
| 26 | | 100 | |

| J | H | Specifications |
|---|---|---|
| JT | HT | Magnetic starter (without enclosure) |
| JGT | HGT | Magnetic starter (without enclosure) |

| Auxiliary contact configuration |
|---|
| PAK-11J～20J |
| Blank·····1NO |
| 31·····1NC |
| PAK-21J |
| Blank·····1NO1NC |
| 20·····2NO |
| 02·····2NC |
| PAK-26J～150H |
| Blank·····2NO2NC |

| Career mark |
|---|
| Except for 50J, 95H models. |

## Ratings, performance and specifications


| Item | Page |
|---|---|
| ●Rated capacity and operational current | 9 |
| ●Characteristics and performance | 15 |
| ●Auxiliary contact ratings | 10 |
| ●Operating coil ratings | 11 |
| ●Conforming wire size and tightening torque | 27 |

## Outline dimensions

The maximum dimensions and mounting methods are given below.

| Model | Dimensions (mm) | | | | | Mounting pitch (mm) | | | Weight (kg) | |
|---|---|---|---|---|---|---|---|---|---|---|
| | W① | W② | H① | H② | D | a | b | Hole | ① | ② |
| PAK-11JT-SL2C<br>PAK-12JT-SL2C | (119) | | (141) | (160) | 77 | 35 | 60 | 2-φ4.6 | 0.56 | 0.63 |
| PAK-20JT-SL2C | (119) | | (141) | (160) | 80.5 | 35 | 60 | 2-φ4.6 | 0.58 | 0.65 |
| PAK-21JT-SL2C | (119) | | (141) | (160) | 80.5 | 56 | 60 | 2-φ4.6 | 0.63 | 0.7 |
| PAK-26JT-SL2C<br>PAK-35JT-SL2C<br>PAK-50JT-SL2 | (82) | | (172) | | (114) | 60~65 | 70 | 2-φ4.6 | 1.07 | 1.14 |
| PAK-50HT-SL2C | 107.5 | (111) | (202) | | 113.5 | 90 | 85 | 2-φ5.8 | 1.85 | 1.93 |
| PAK-65HT-SL2C<br>PAK-80HT-SL2C<br>PAK-95HT-SL2 | 107.5 | (111) | (202) | | 113.5 | 90 | 85 | 2-φ5.8 | 2.05 | 2.13 |
| PAK-100HT-SL2C<br>PAK-125HT-SL2C | (116) | (122) | (265) | | 140 | 90 | 85 | 2-φ5.8 | 3.85 | 3.93 |
| PAK-150HT-SL2C | 125 | | (271) | | 156.5 | 100 | 124 | 2-φ7 | 4.76 | 4.84 |

Notes. ①Weight for standard model is indicated.
②Weight for phase-failure protection model is indicated.
Dimensions in parentheses indicates for reference dimensions.

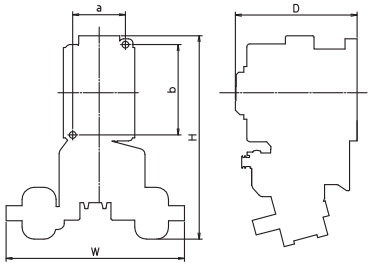


PAK−11JT~21JT−SL2C

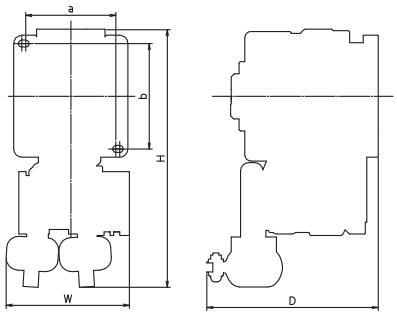


PAK−26JT,35JT−SL2C
PAK−50JT−SL2

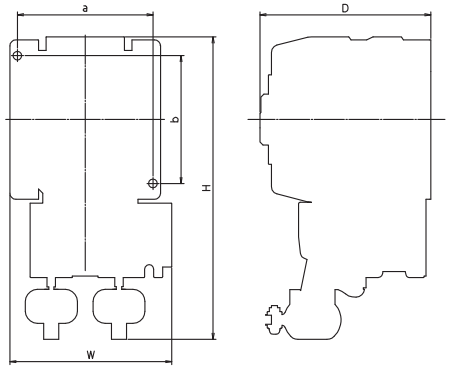


PAK−50HT~80HT−SL2C
PAK−95HT−SL2

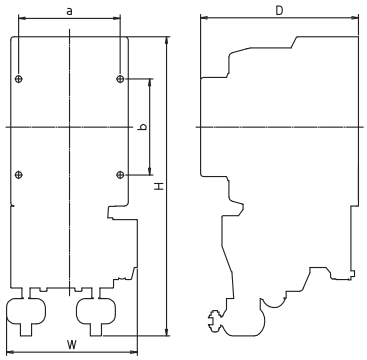


PAK−100HT,125HT−SL2C

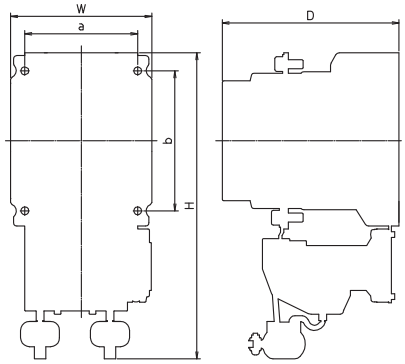


PAK−150HT−SL2C

## Connection diagram

PAK−11JT~20JT−SL2C
PAK−11JGT~20JGT−SL2C

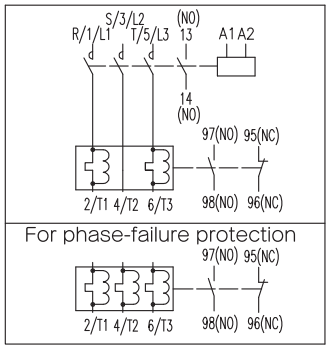


PAK−21JT−SL2C
PAK−21JGT−SL2C

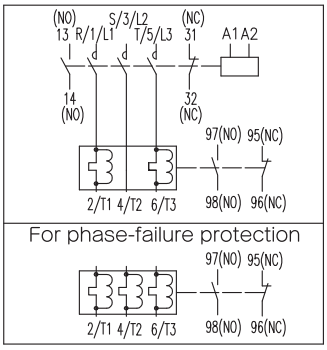


PAK−26JT~50JT−SL2(C)
PAK−26JGT~50JGT−SL2(C)

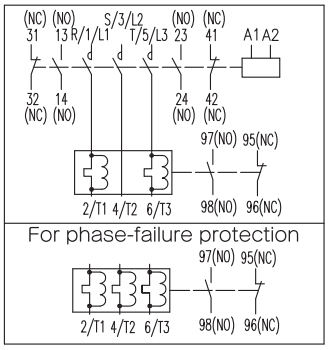


PAK−50HT~150HT−SL2C
PAK−50HGT~150HGT−SL2C

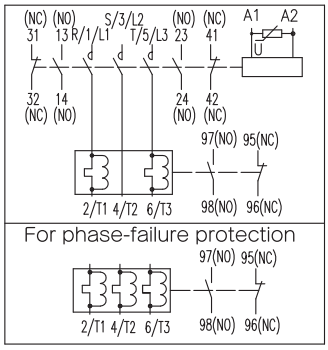

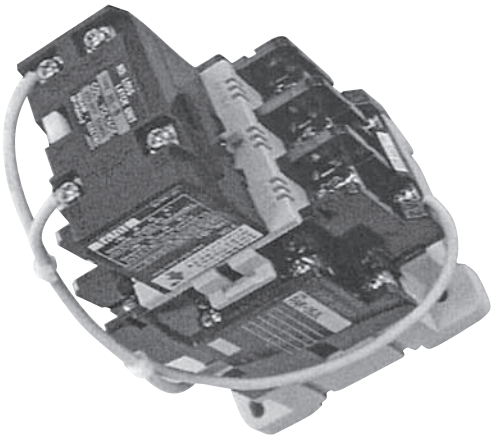

## Features

- Contacts do not open at the time of blackout or voltage drop.
- Integrating reliable latching mechanism to magnetic contactors, which makes excitation happenes only on closing and opening.
  For another time, contactors will be maintained by mechanical mechanism.
- Magnetic contactors will not open even through blackout, momentary blackout or voltage drop.
- Instand excitation mechanism make contactors to save power consumption and to operate silently.
- Reversing type mechanical latch magnetic contactors will be suitable for change-over use of normal power supply and standby power supply such as private power generator, because an electrical and mechanism interlocking circuit is provided.
- Sequence can be checked easily by manual closing/opening.
- Built-in self-demagnetization contact provided with these contactors.

## Model explanation

PAK — 21 JL

| Type |
|---|
| PAK ···Non-reversing model |
| RSK ···Reversing model |

| Model | |
|---|---|
| J | H |
| 21 | 80 |
| 35 | 150 |
| | 220 |

## Selection table

| Frame | | | 21JL | 35JL | 80HL | 150HL | 220HL |
|---|---|---|---|---|---|---|---|
| Model type | Non-reversing magnetic contactor | | PAK-21JL | PAK-35JL | PAK-80HL | PAK-150HL | PAK-220HL |
| | Reversing magnetic contactor | | RSK-21JL | RSK-35JL | RSK-80HL | RSK-150HL | RSK-220HL |
| Main circuit ratings | AC-3:3-phase squirrel-cage induction motor | 200-220V | 5.5kW/26A | 11kW/50A | 25kW/100A | 50kW/200A | 80kW/300A |
| | | 380-440V | 11kW/25A | 22kW/45A | 45kW/90A | 80kW/150A | 105kW/210A |
| | AC-1: Resistive load | 200-220V | 32A | 60A | 110A | 200A | 300A |
| | | 380-440V | 32A | 60A | 110A | 200A | 260A |
| | Rated thermal current(A) | | 32A | 60A | 110A | 200A | 300A |
| Auxiliary circuit ratings | AC-15: coil load | 100-110V | 10A | 10A | 10A | 10A | 10A |
| | | 200-220V | 6A | 6A | 6A | 6A | 6A |
| | | 380-440V | 3A | 3A | 3A | 3A | 3A |
| | Rated thermal current(A) | | 10A | 10A | 10A | 10A | 10A |
| Auxiliary contact configuration | Non-reversing magnetic contactor | | 1NO | 1NO2NC | 1NO2NC | 1NO2NC | 1NO2NC |
| | Reversing magnetic contactor | | 1NO×2 | 1NO2NC×2 | 1NO1NC×2 | 1NO1NC×2 | 1NO1NC×2 |
| Performance | Mechanical life(×10⁶ ops) | | 0.25 | 0.25 | 0.25 | 0.25 | 0.25 |
| | Electrical life(×10⁶ ops) | | 0.25 | 0.25 | 0.25 | 0.25 | 0.25 |
| | Switching frq(ops/hour) | | 600 | 600 | 600 | 600 | 600 |
| | IEC60947-4-1 | | AC-3 | AC-3 | AC-3 | AC-3 | AC-3 |
| Operating current(A) (AC200V) | | closing | 0.33 | 0.53 | 1.21 | 7.28 | 7.28 |
| | | opening | 0.84 | 0.84 | 0.84 | 2.13 | 2.13 |
| Operating voltage (V) | | closing(less or equal) | 150 | 150 | 150 | 160 | 160 |
| | | opening(less or equal) | 160 | 160 | 160 | 160 | 160 |
| Operating time (ms) | | closing | 8~30 | 8~30 | 8~30 | 16~35 | 16~35 |
| | | opening | 8~25 | 8~25 | 8~25 | 10~30 | 10~30 |
| Closing & breaking current(A) | | | 10 times of an AC-3-class rated operating current | | | | |
| Coil ratings | | AC24V | 24V 50／60Hz | | | | |
| | | AC48V | 48V 50／60Hz | | | | |
| | | AC100V | 100-110V 50／60Hz | | | | |
| | | AC200V | 200-220V 50／60Hz | | | | |
| | | AC240V | 220-240V 50／60Hz | | | | |
| | | DC100V | DC100-120V | | | | |
| | | DC200V | DC200-240V | | | | |

## Dimensions

### PAK-21JL

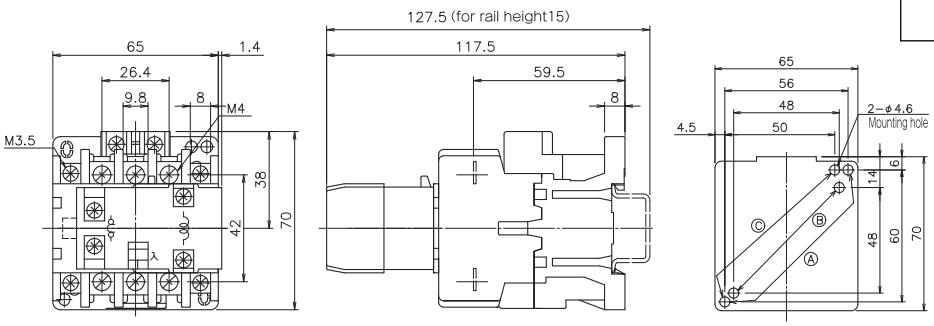


Connection diagram

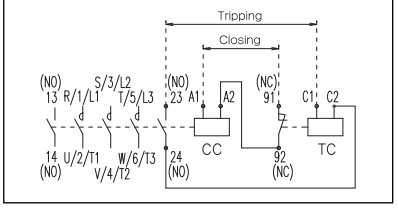


CC:Closing coil
TC:Tripping coil

Note. Operating coil is short time rated, please be sure to connect demagnetize contact point serially.

Ⓐ 56× 60 (Recommended mounting point)
Ⓑ 48× 48
Ⓒ 50× 60

Weight 0.46kg

### PAK-35JL

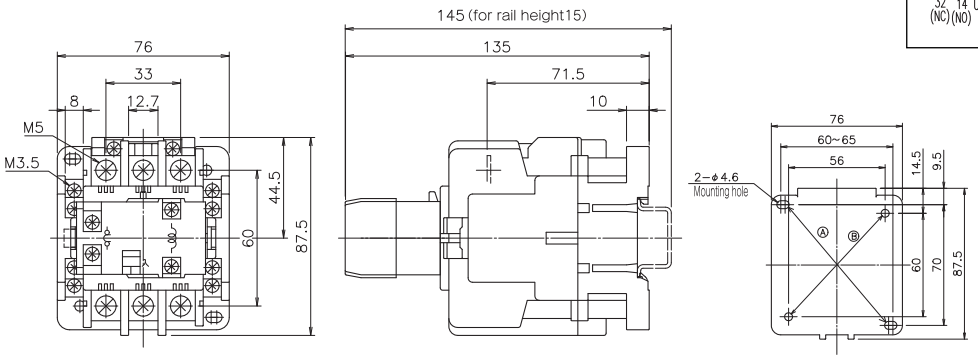


Connection diagram

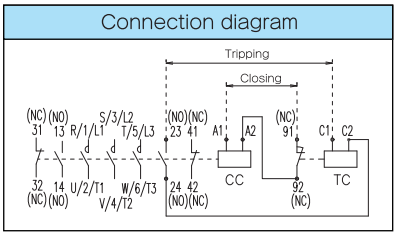


CC:Closing coil
TC:Tripping coil

Note. Operating coil is short time rated, please be sure to connect demagnetize contact point serially.

Ⓐ 60~ 65× 70 (Recommended mounting point)
Ⓑ 56× 60

Weight 0.78kg

### PAK-80HL

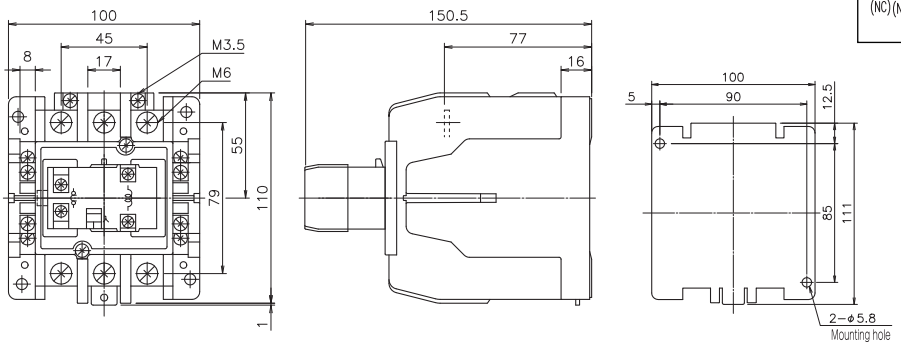


Connection diagram

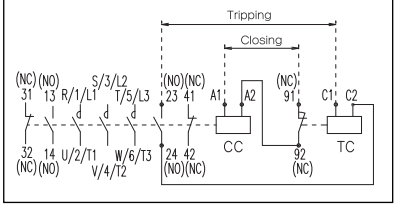


CC:Closing coil
TC:Tripping coil

Note. Operating coil is short time rated, please be sure to connect demagnetize contact point serially.

Weight 1.6kg

## PAK-150HL

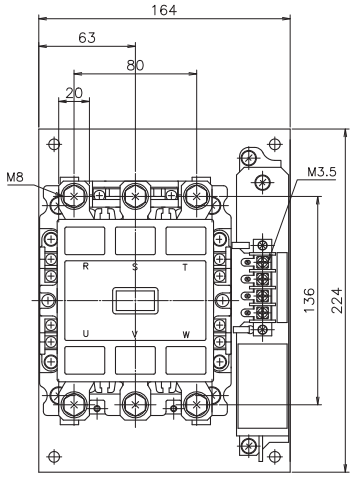


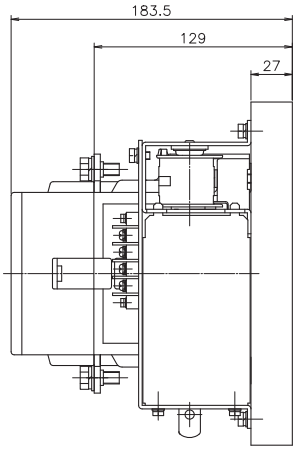


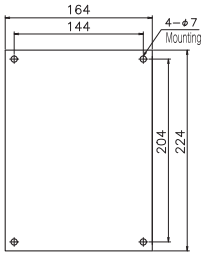


### Connection diagram

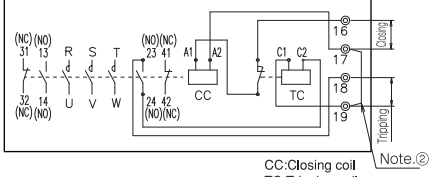


CC:Closing coil
TC:Tripping coil

Note. ①Operating coil is short time rated, please be sure to connect demagnetize contact point serially.
②If power supply for closing and tripping is provided separately, please open the shorted line of 17-19 terminals.

Weight 6.8kg

## PAK-220HL

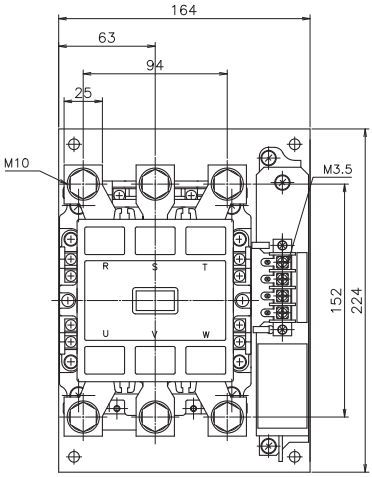


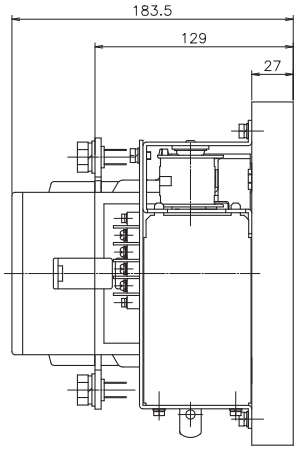


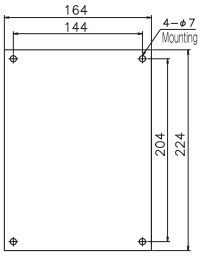


### Connection diagram

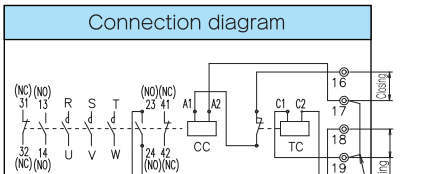


CC:Closing coil
TC:Tripping coil

Note. ①Operating coil is short time rated, please be sure to connect demagnetize contact point serially.
②If power supply for closing and tripping is provided separately, please open the shorted line of 17-19 terminals.

Weight 7.3kg

## RSK-21JL

### Connection diagram

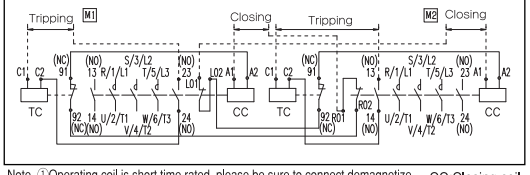


Note. ①Operating coil is short time rated, please be sure to connect demagnetize contact point serially.
②LO1,LO2,RO1,RO2 are contacts for exclusive use of electrical interlock.

CC:Closing coil
TC:Tripping coil

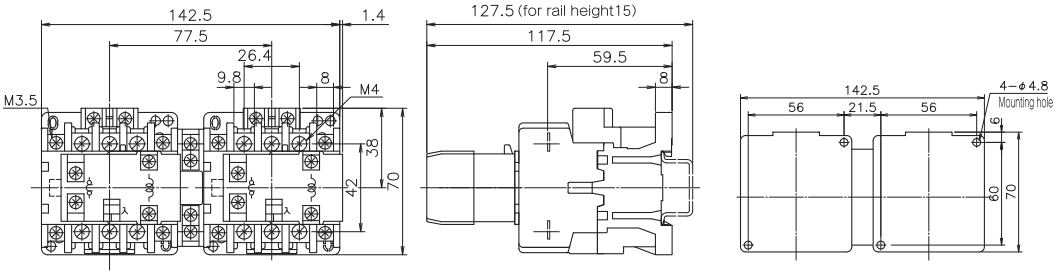


Weight 0.95kg

## RSK-35JL

### Connection diagram

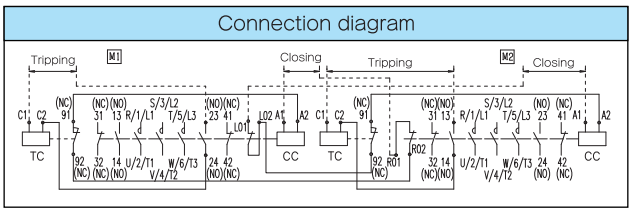


Note. ①Operating coil is short time rated, please be sure to connect demagnetize contact point serially.
②LO1,LO2,RO1,RO2 are contacts for exclusive use of electrical interlock.

CC:Closing coil
TC:Tripping coil

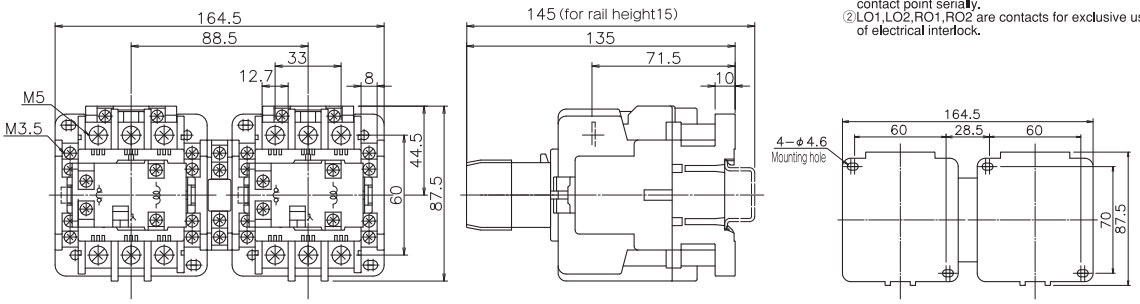


Weight 1.6kg

## RSK-80HL

### Connection diagram

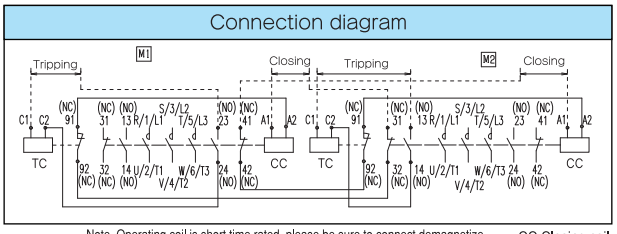


Note. Operating coil is short time rated, please be sure to connect demagnetize contact point serially.

CC:Closing coil
TC:Tripping coil

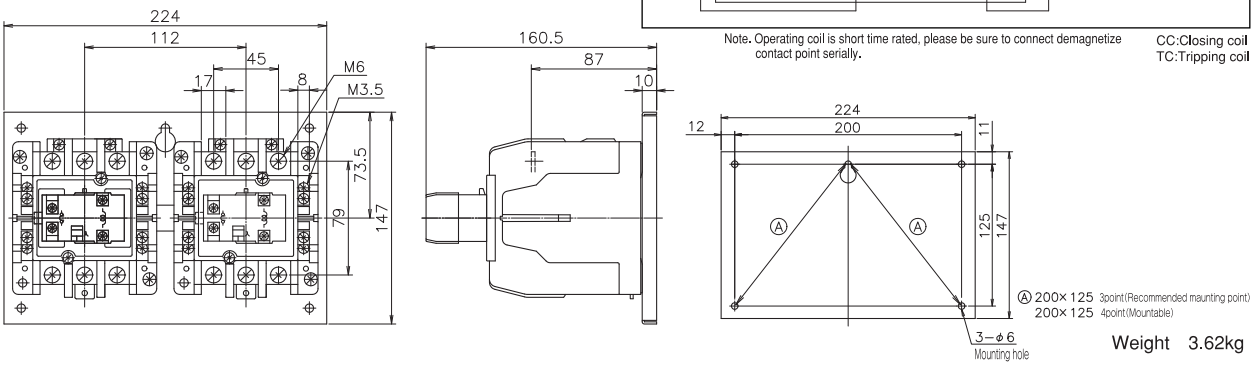


Weight 3.62kg

## RSK-150HL

### Connection diagram

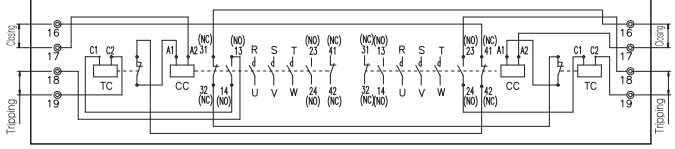


CC:Closing coil
TC:Tripping coil

Note. Operating coil is short time rated, please be sure to connect demagnetize contact point serially.

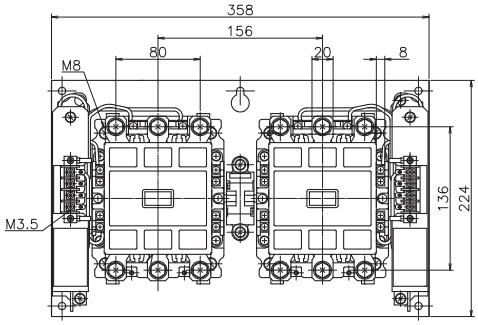


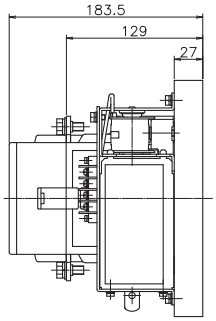


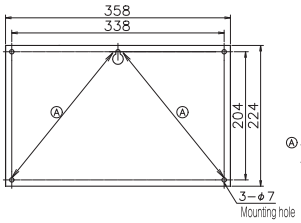


Ⓐ 338×204 3point(Recommended mounting hole)
338×204 4point(Mountable)

Weight 13.5kg

## RSK-220HL

### Connection diagram

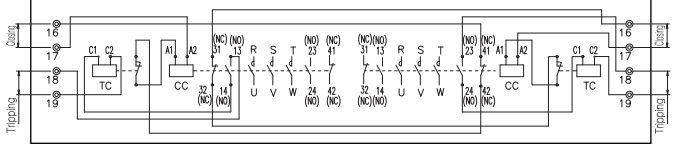


CC:Closing coil
TC:Tripping coil

Note. Operating coil is short time rated, please be sure to connect demagnetize contact point serially.

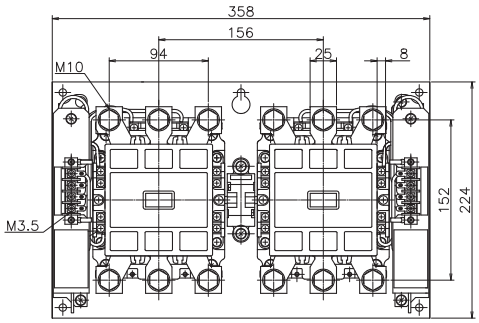


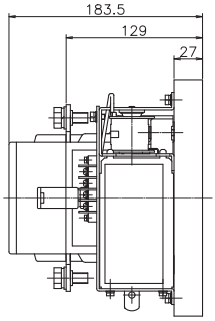


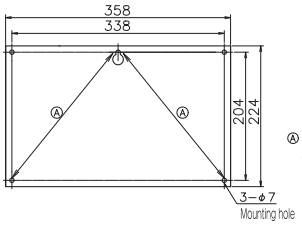


Ⓐ 338×204 3point(Recommended mounting point)
338×204 4point(Mountable)

Weight 14kg

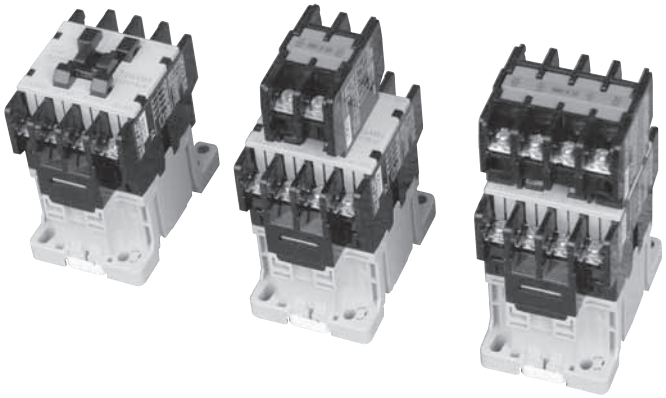

## Features

The twin-contact design improves contact reliability.

## Model explanation

**PAK — 8 JS 44**

- PAK: Type
- 8: Frame
- JS: Specifications
- 44: Contact configuration

| Specifications | |
|---|---|
| JS····· | Standard magnetic relay |

| Contact configuration | |
|---|---|
| 40···4NO | 33···3NO3NC |
| 31···3NO1NC | 80···8NO |
| 22···2NO2NC | 71···7NO1NC |
| 60···6NO | 62···6NO2NC |
| 51···5NO1NC | 53···5NO3NC |
| 42···4NO2NC | 44···4NO4NC |

※An auxiliary contact unit is added for more than four contacts (see page 84 for auxiliary contact units).

## Performance and specifications

| Item | Page |
|---|---|
| ●Operating magnet characteristics | 12 |
| ●Operating coil ratings | 11 |

## Selection table

| Appearance | | | 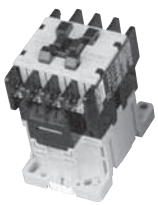 | | 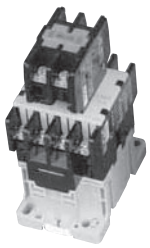 | | 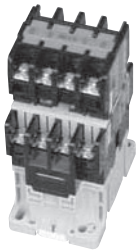 |
|---|---|---|---|---|---|---|---|
| Model | | | PAK-8JS | | | | |
| Number of contacts | | | 4 | | 6 | | 8 |
| Contact configuration | | | 4NO · 3NO1NC · 2NO2NC | | 6NO · 5NO1NC · 4NO2NC · 3NO3NC | | 8NO · 7NO1NC · 6NO2NC 5NO3NC · 4NO4NC |
| Rated thermal current(A) | | | 10 | | | | |
| AC | AC Performance（IEC 60947-5-1） | | AC-15 | AC-15 | AC-12 | AC-12 |
| | Electrical life（×$10^6$ ops） | | 1 | 0.5 | 1 | 0.5 |
| | Mechanical life（×$10^6$ ops） | | 5 | | | |
| | Rated operational current（A） | 100-110V | 6 | 10 | 6 | 10 |
| | | 200-240V | 4 | 6 | 5 | 6 |
| | | 380-440V | 2 | 3 | 4 | 5 |
| | | 500-550V | 2 | 3 | 3 | 4 |
| DC | DC Performance（IEC 60947-5-1） | | DC-13 | DC-13 | DC-12 | DC-12 |
| | Electrical life（×$10^6$ ops） | | 1 | 0.5 | 1 | 0.5 |
| | Mechanical life（×$10^6$ ops） | | 5 | | | |
| | Rated operational current（A） | 24 V | 7 | 10 | 10 | 10 |
| | | 48 V | 1.4 | 2 | 10 | 10 |
| | | 100-110 V | 0.7 | 1 | 7 | 10 |
| | | 200-220 V | 0.18 | 0.25 | 0.8 | 1.2 |
| Minimum operating voltage/current | | | 24V 10mA | | | |
| DIN rail mounting | | | ○ | | | |

Notes① AC-15: AC Magnetic load control
AC-12: Resistive load control
DC-13: DC Magnetic load control
DC-12: Resistive load control

## Dimensions and specifications



### PAK-8JS (4P)

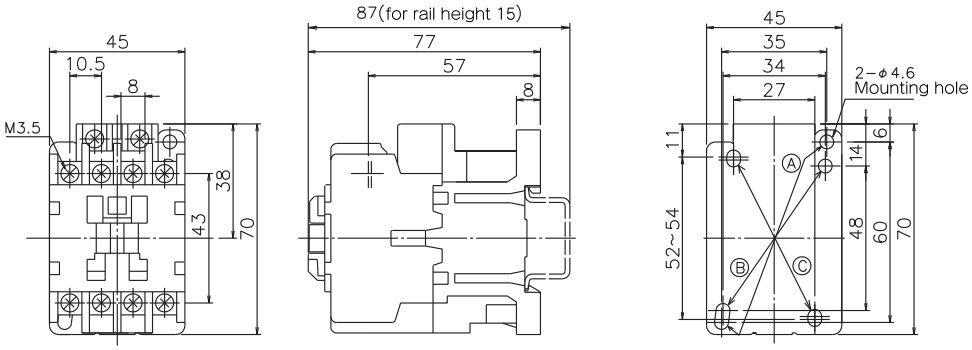


Ⓐ 35×60 (Recommended mounting point)
Ⓑ 34×48 (Compatible with PAK-6US, 10US4P)
Ⓒ 27×52~54 (Compatible with PAK-8US)

| Conforming wire and tightening torque | |
|---|---|
| Item | Specifications |
| Screw size | M3.5 |
| Applicable wire | φ1~1.6<br>0.5~2mm² |
| Applicable round crimp-type terminals | 1.25-3.5<br>2-3.5 |
| Tightening torque N·m(Kgf·cm) | 0.8~1.2<br>(8~12) |

Weight 0.3kg

### PAK-8JS (6P)

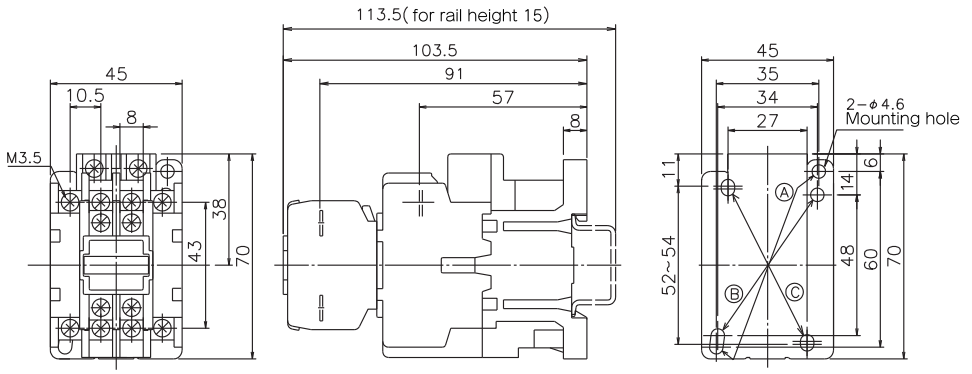


Ⓐ 35×60 (Recommended mounting point)
Ⓑ 34×48 (Compatible with PAK-6US, 10US4P)
Ⓒ 27×52~54 (Compatible with PAK-8US)

| Conforming wire and tightening torque | |
|---|---|
| Item | Specifications |
| Screw size | M3.5 |
| Applicable wire | φ1~1.6<br>0.5~2mm² |
| Applicable round crimp-type terminals | 1.25-3.5<br>2-3.5 |
| Tightening torque N·m(Kgf·cm) | 0.8~1.2<br>(8~12) |

Weight 0.325kg

### PAK-8JS (8P)

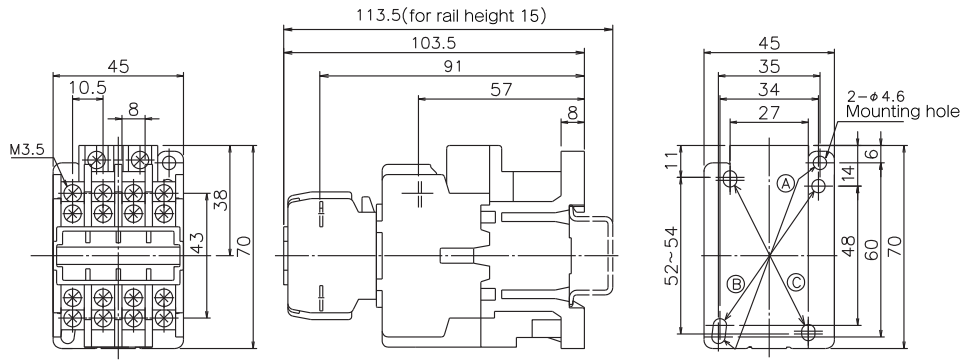


Ⓐ 35×60 (Recommended mounting point)
Ⓑ 34×48 (Compatible with PAK-6US, 10US4P)
Ⓒ 27×52~54 (Compatible with PAK-8US)

| Conforming wire and tightening torque | |
|---|---|
| Item | Specifications |
| Screw size | M3.5 |
| Applicable wire | φ1~1.6<br>0.5~2mm² |
| Applicable round crimp-type terminals | 1.25-3.5<br>2-3.5 |
| Tightening torque N·m(Kgf·cm) | 0.8~1.2<br>(8~12) |

Weight 0.345kg

## Contact configuration diagrams

| Model | Contact configuration |
|---|---|
| PAK-8JS40 | 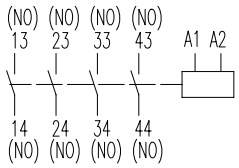 |
| PAK-8JS31 | 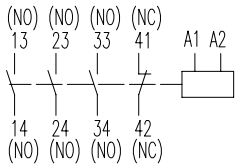 |
| PAK-8JS22 | 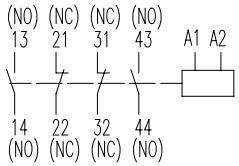 |

| Model | Contact configuration |
|---|---|
| PAK-8JS60 | 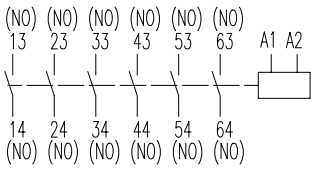 |
| PAK-8JS51 | 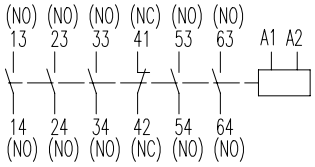 |
| PAK-8JS42 | 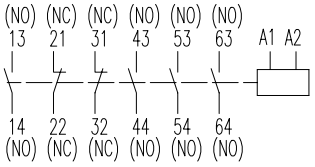 |
| PAK-8JS33 | 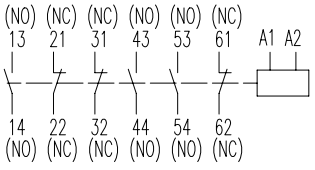 |

| Model | Contact configuration |
|---|---|
| PAK-8JS80 | 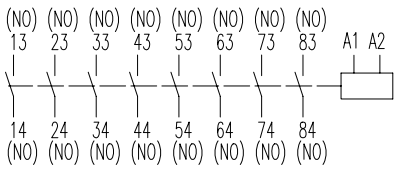 |
| PAK-8JS71 | 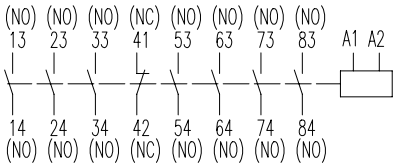 |
| PAK-8JS62 | 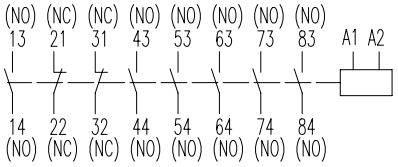 |
| PAK-8JS53 | 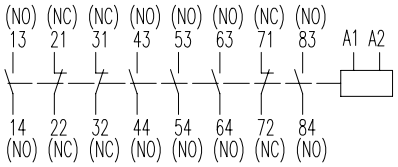 |
| PAK-8JS44 | 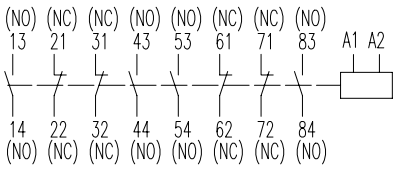 |

# 4 poles contactors



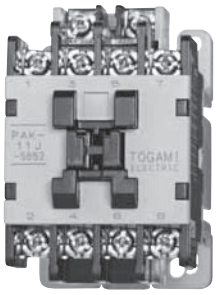

## Features

- 4 poles type.
- Small size.
- High breaking capacity.

## Performance and specifications

| Terminal | Contactors | AC-3 440V | | AC-1 440V | Aux. Contact | | Poles |
|---|---|---|---|---|---|---|---|
| | | kW | HP | A | NO | NC | |
| DIN & tab | PAK- 6JC-S659 | 4 | 5.5 | 15 | – | – | 4 |
| | PAK-11J-S659 | 4.5 | 6 | 20 | – | – | |
| | PAK-12J-S659 | 5.5 | 7.5 | 26 | – | – | |
| | PAK-20J-S659 | 11 | 15 | 32 | – | – | |

## Dimensions

### PAK-6JC-S659

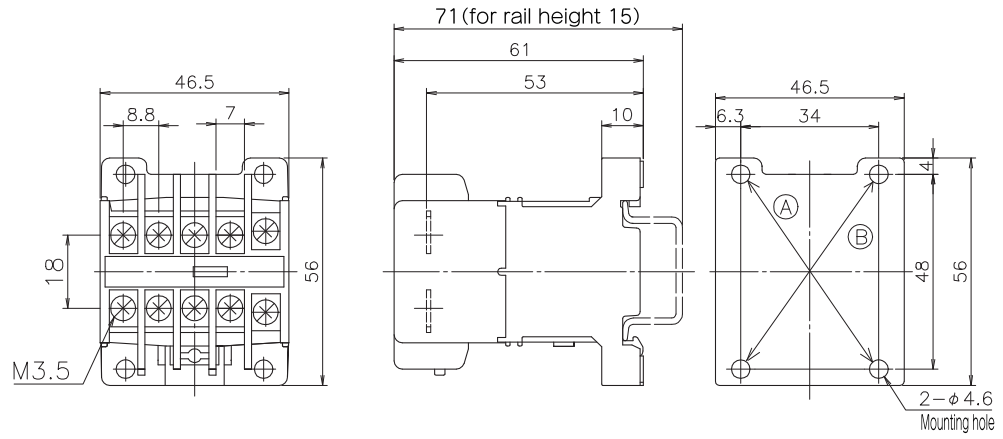


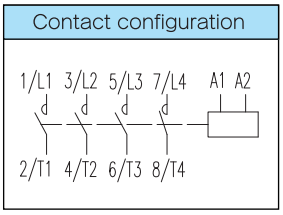


Ⓐ 34×48 (Recommended mounting hole)
Ⓑ 34×48 (Compatible with PAK-6H)

Weight 6JC=0.17kg

### PAK-11J・12J-S659

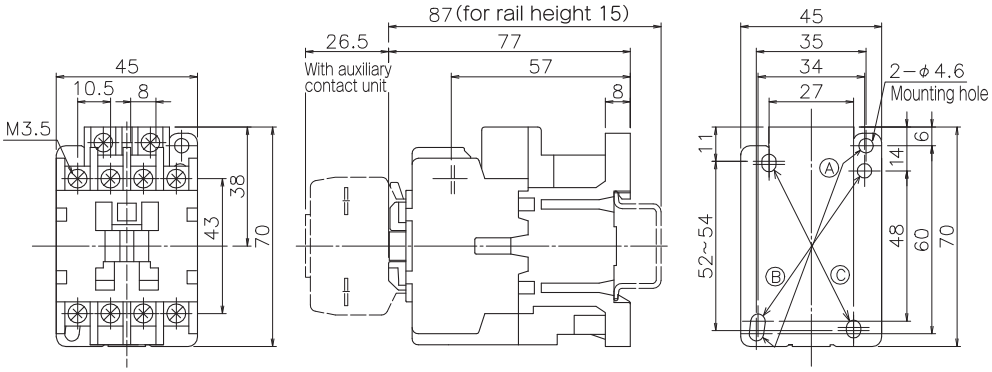


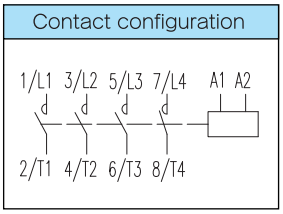


Ⓐ 35×60 (Recommended mounting hole)
Ⓑ 34×48 (compatible with PAK-6H,11H,11HK)
Ⓒ 27×52~54

Weight 11J・12J=0.3kg

### PAK-20J-S659

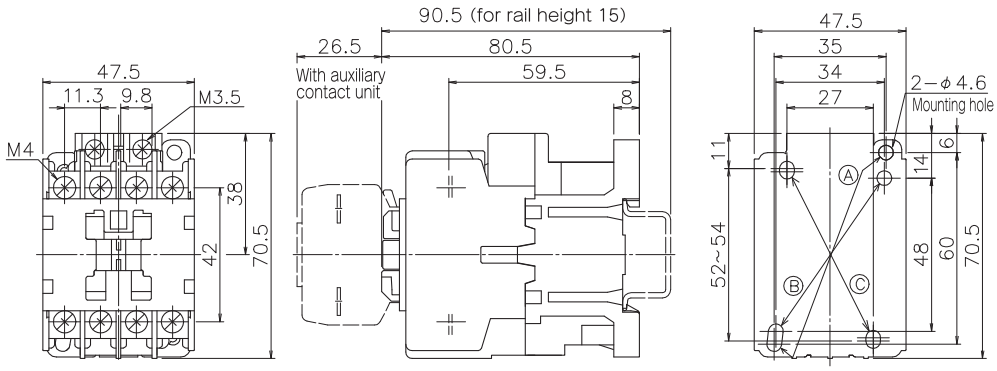


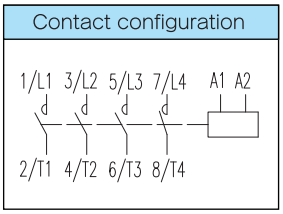


Ⓐ 35×60 (Recommended mounting hole)
Ⓑ 34×48
Ⓒ 27×52~54

Weight 20J=0.32kg

3

| | | | | | | | | |
|---|---|---|---|---|---|---|---|---|
| Types | standard model | TJ-18JA | TJ-18 | TJ-18N | TJ-35 | | TJ-50 | |
| | phase-failure protection model | GTJ-18JA | GTJ-18 | GTJ-18N | GTJ-35 | | GTJ-50 | |
| | 3-heaters protection model | TJ-18JA-3 | TJ-18-3 | TJ-18N-3 | TJ-35-3 | | TJ-50-3 | |
| Appearance | | 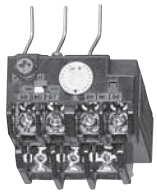 | | 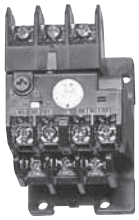 | 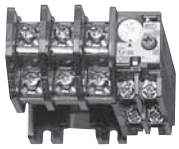 | | 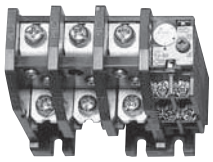 | |
| Combination of magnetic contactors | | PAK-6JC<br>CLK-15JC<br>① | PAK-11J<br>PAK-12J<br>PAK-20J<br>PAK-21J<br>CLK-25J3<br>CLK-20J<br>CLK-26J | (Individual use) | PAK-26J<br>PAK-35J<br>PAK-50J | CLK-35J3<br>CLK-35J<br>CLK-50J<br>CLK-65J | PAK-50H<br>PAK-65H<br>PAK-80H<br>PAK-95H | CLK-65H<br>CLK-80H<br>CLK-100H |
| Poles | | 3 | | 3 | 3 | | 3 | |
| Heater elements | standard model | 2 | | 2 | 2 | | 2 | |
| | phase-failure protection model | 3 | | 3 | 3 | | 3 | |
| | 3-heaters protection model | 3 | | 3 | 3 | | 3 | |
| Individual use | | — | | Possible | Possible | | Possible | |
| Rated current (A) | Standard model<br>Phase-failure protection model<br>(3-point set current scale) | 0.2 — 0.25 — 0.3<br>0.24 — 0.3 — 0.36<br>0.28 — 0.35 — 0.42<br>0.4 — 0.5 — 0.6<br>0.56 — 0.7 — 0.84<br>0.64 — 0.8 — 0.96<br>0.8 — 1 — 1.2<br>1 — 1.2 — 1.4<br>1.2 — 1.4 — 1.6<br>1.4 — 1.8 — 2.2<br>1.8 — 2.3 — 2.8<br>2.4 — 3 — 3.6<br>2.9 — 3.6 — 4.3<br>3.7 — 4.6 — 5.5 | | 4 — 5 — 6<br>5.4 — 6.7 — 8<br>6 — 7.5 — 9<br>7.4 — 9.2 — 11<br>8.8 — 11 — 13<br>11 — 13 — 15<br>12 — 15 — 18<br>15 — 18 — 20<br>18 — 22 — 26<br>22 — 26 | 0.2 — 0.25 — 0.3<br>0.24 — 0.3 — 0.36<br>0.28 — 0.35 — 0.42<br>0.4 — 0.5 — 0.6<br>0.56 — 0.7 — 0.84<br>0.64 — 0.8 — 0.96<br>0.8 — 1 — 1.2<br>1 — 1.2 — 1.4<br>1.2 — 1.4 — 1.6<br>1.4 — 1.8 — 2.2<br>1.8 — 2.3 — 2.8<br>2.4 — 3 — 3.6<br>2.9 — 3.6 — 4.3<br>3.7 — 4.6 — 5.5<br>4 — 5 — 6 | | 5.4 — 6.7 — 8<br>6 — 7.5 — 9<br>7.4 — 9.2 — 11<br>8.8 — 11 — 13<br>11 — 13 — 15<br>12 — 15 — 18<br>15 — 18 — 20<br>18 — 22 — 26<br>21 — 26 — 31<br>24 — 30 — 36<br>28 — 34 — 42<br>34 — 42 — 48<br>40 — 48 — 52<br>46 — 56 — 65 | 12 — 15 — 18<br>18 — 22 — 26<br>21 — 26 — 31<br>24 — 30 — 36<br>28 — 34 — 42<br>34 — 42 — 48<br>40 — 48 — 58<br>46 — 56 — 64<br>56 — 68 — 80<br>68 — 80 — 94<br>76 — 90 — 100 | |
| ③ | Fast-trip model range ④<br>(1-point set current fixed) | 2.8～26 | | | 4～65 | | 20～100 | |
| Adjusting dial | | Ampere scale | | | Ampere scale | | Ampere scale | |
| Resetting method | | Manual/automatic | | | Manual/automatic | | Manual/automatic | |
| Ambient temperature compensation | | Provided | | | Provided | | Provided | |
| Manual check button | | Provided | | | Provided | | Provided | |
| Indication of operation | | Provided | | | Provided | | Provided | |
| Output Contact | | 1NO1NC | | | 1NO1NC | | 1NO1NC | |
| Rated ope-current of output contacts (A) AC15 | Contacts | 1NO | 1NC | | 1NO | 1NC | 1NO | 1NC |
| | 100-110V | 2 | 3 | | 4 | 4 | 4 | 4 |
| | 200-220V | 1 | 2 | | 2 | 3 | 2 | 3 |
| | 380-440V | 0.5 | 1.5 | | 1 | 1.5 | 1 | 1.5 |
| | 500-550V | 0.4 | 0.7 | | 0.8 | 1 | 0.8 | 1 |

Notes. ①For PAK-6JC,the accessories for connection are not necessary.
②However 3-heaters protection models for T-400 and T-600 are not manutactured.

| TJ-125 | | TJ-220 | | TJ-400N | | T-400 | | T-600 | |
|---|---|---|---|---|---|---|---|---|---|
| GTJ-125 | | GTJ-220 | | GTJ-400N | | GT-400 | | GT-600 | |
| TJ-125-3 | | TJ-220-3 | | TJ-400N-3 | | — | | — | |
| 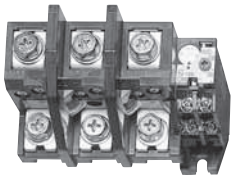 | | 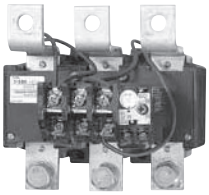 | | 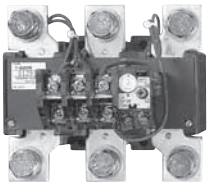 | | 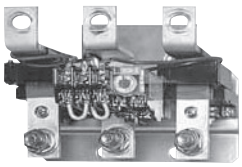 | | 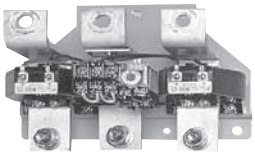 | |
| PAK-100H CLK-125H<br>PAK-125H CLK-150H<br>PAK-150H CLK-200H | | PAK-220H CLK-250H<br>PAK-270H | | (Individual use) | | PAK-300J<br>PAK-400J | | PAK-600J | |
| 3 | | 3 | | 3 | | 3 | | 3 | |
| 2 | | 2 | | 2 | | 2 | | 2 | |
| 3 | | 3 | | 3 | | 3 | | 3 | |
| 3 | | 3 | | 3 | | 3 | | 3 | |
| Possible | | — | | Possible | | — | | — | |
| 34 — 42 — 48<br>40 — 48 — 58<br>46 — 56 — 64<br>56 — 68 — 80<br>68 — 80 — 94<br>76 — 90 — 100<br>85 — 105 — 125<br>110 — 130 — 150<br>130 — 160 — 190<br>170 — 200 — 230 | | 65 — 80 — 95<br>85 — 105 — 125<br>105 — 130 — 150<br>130 — 160 — 190<br>150 — 190 — 230<br>185 — 230 — 275<br>215 — 270 — 325<br>265 — 330 — 400 | | 150 — 190 — 230<br>185 — 230 — 275<br>215 — 270 — 325<br>265 — 330 — 400<br>310 — 390 — 470<br>400 — 500 — 600 | | 110 — 140 — 180⑤<br>170 — 240 — 290<br>280 — 380 — 440 | | 110 — 140 — 180⑤<br>170 — 240 — 290<br>280 — 380 — 440<br>400 — 500 — 600 | |
| | | | | | | 110 — 140 — 170⑤<br>140 — 180 — 220<br>200 — 240 — 280<br>240 — 300 — 360<br>300 — 380 — 450 | | 110 — 140 — 170⑤<br>140 — 180 — 220<br>200 — 240 — 280<br>240 — 300 — 360<br>300 — 380 — 450<br>400 — 500 — 600 | |
| 60～150 | | — | | — | | — | | — | |
| Ampere scale | | Ampere scale | | Ampere scale | | Ampere scale | | Ampere scale | |
| Manual/automatic | | Manual/automatic | | Manual/automatic | | Manual/automatic | | Manual/automatic | |
| Provided | | Provided | | Provided | | Provided | | Provided | |
| Provided | | Provided | | Provided | | Provided | | Provided | |
| Provided | | Provided | | Provided | | Provided | | Provided | |
| 1NO1NC | | 1NO1NC | | 1NO1NC | | 1NO1NC | | 1NO1NC | |
| 1NO | 1NC | 1NO | 1NC | 1NO | 1NC | 1NO | 1NC | 1NO | 1NC |
| 4 | 4 | 4 | 4 | 4 | 4 | 2(0.5) ⑥ | 3(1) ⑥ | 2(0.5) ⑥ | 3(1) ⑥ |
| 2 | 3 | 2 | 3 | 2 | 3 | 1(0.5) ⑥ | 2(1) ⑥ | 1(0.5) ⑥ | 2(1) ⑥ |
| 1 | 1.5 | 1 | 1.5 | 1 | 1.5 | 0.5(0.2) ⑥ | 1(0.3) ⑥ | 0.5(0.2) ⑥ | 1(0.3) ⑥ |
| 0.8 | 1 | 0.8 | 1 | 0.8 | 1 | — | — | — | — |

③The rated current of thermal overload relays for magnetic contactor must be selected within the rated operational current of magnetic contactors.
④Phase-failure protection models can produce more than 8A.
⑤For T-400 to T-600, upper column indicates for 2-heaters (standard) models and lower for phase-failure protection models.
⑥Value in parentheses indicates at auto-reset condition.
⑦Standard and phase-failure protection models are also available in slow-trip models.

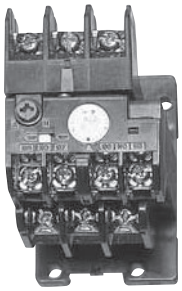
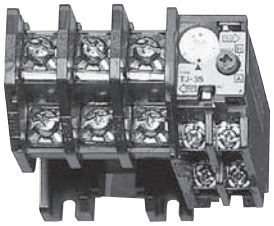
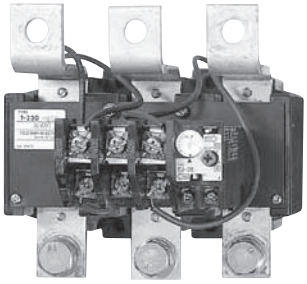

## Features

- It protects motor from burnout due to overload and phase-failure.
- With operating indication.
  An output contact is electrically insulated contact of 1NO1NC.
- Automatic compensation for ambient temperature.
  Operating current will automatically adjusted throughout the ambient temperature range of -20 to +60℃.
- One-touch selection of manual or automatic reset.
  Just press the reset button then turn 90 degree for change over the resetting method.
- TJ-18N, TJ-35～TJ-125 and TJ-400N（GTJ-18N, GTJ-35～GTJ-125 and GTJ-400N） can be used independently.

## Model explanation

TJ — 35 T26J — 3

**Type**

TJ …Standard type
GTJ …Phase-failure protaction type
※In the case of 400,600 frames, it becomes the following type.
T …Standard type
GT …Phase-failure protaction type

**Frame**

| Standard type | Phase-failure protection type |
|---|---|
| 18JA | 18JA |
| 18 | 18 |
| 18N | 18N |
| 35 | 35 |
| 50 | 50 |
| 125 | 125 |
| 220 | 220 |
| 400 | 400 |
| 400N | 400N |
| 600 | 600 |

**Accessories**

If required connecting parts for mounting to the contactor, specify the contact frame. However,it is not required for the combination with PAK-6JC.

【Ex】
Specify T26J for a combination with the PAK-26J. For a PAK-H model, the suffix will be H instead of J.

**Accessory devices**

| Code | Standard type | Phase-failure protection type |
|---|---|---|
| Blank | 2-heaters | — |
| 3 | 3-heaters | — |
| SL2 | Slow-trip | Slow-trip |
| F | Fast-trip | Fast-trip |

## Performance in balanced circuit

| Standards | Standard type | | Hot start | Cold start | Ambient temperature |
|---|---|---|---|---|---|
| | Non-action | Action | | | |
| IEC 60947-4-1<br>JIS C 8201-4-1 | 105%Ie Less than 2 hours | 120%Ie Less than 2 hours | Trip class 10A 150%Ie 2min Less than | Trip class 10A 720%Ie 2～10s Less than | 20℃ |
| | | | Trip class 20 150%Ie 8min Less than | Trip class 20 720%Ie 6～20s Less than | |

## Performance in unbalanced circuit

| Standards | Phase-failure protection device | Non-action | Action (Hot start) | Ambient temperature |
|---|---|---|---|---|
| IEC 60947-4-1<br>JIS C 8201-4-1 | Without phase-failure protection device | 3-phase : 100%Ie | 2-phase : 132%Ie(Less than 2 hours)<br>1-phase : 0(Less than 2 hours) | 20℃ |
| | With phase-failure protection device | 2-phase : 100%Ie<br>1-phase : 90%Ie | 2-phase : 115%Ie(Less than 2 hours)<br>1-phase : 0(Less than 2 hours) | |

Notes. ①Ie : Settling
②The value over 30s shell be max operating time by second.

## Structure

### 1. Standard type

Internal structure of standard thermal overload relay(TJ-35)

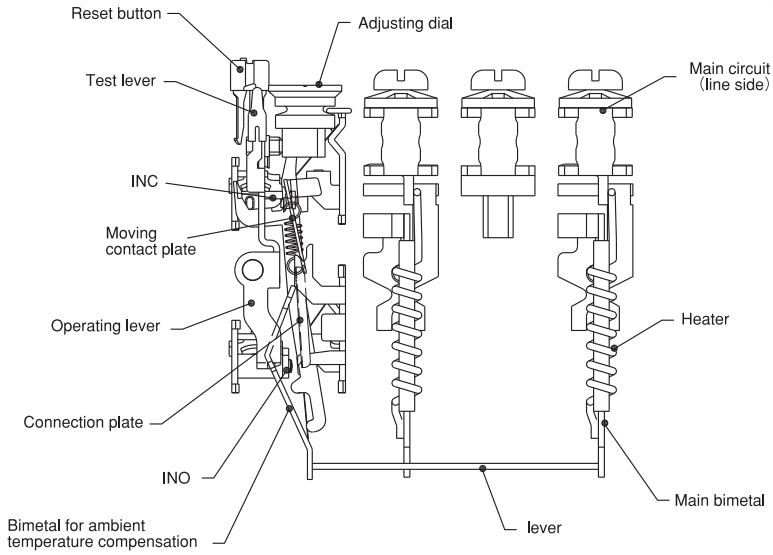


※All models have one-touch changeover mechanism of auto/manual reset. Refer to page 79 for details.

### 2. Phase-failure protection type

Phase-failure detection is made by using the difference of bend on main bimetals. The differential amplification mechanism, composed of the first,second, and differential motion lever which are very accurate, detects the difference in bend.

A. Rated load mechanism

Bimetals on three phases make "a" bend by load current. First, second and differential motion levers make "a" parallel movement to the left, but the contact does not open.

B. 3-phase overload mechanism

Due to over current, bimetals make more "b" bend than rated load mechanism, and the contact opens.

C. Phase-failure (T phase) mechanism

The bimental of T phase does not bend, but bimetals on R and S phases make "c" bend.

This "c" is amplified y/x times by differential motion lever and the contact is opened.

Thus at the open-phase condition, it operates at lower current than at 3-phase overload current.

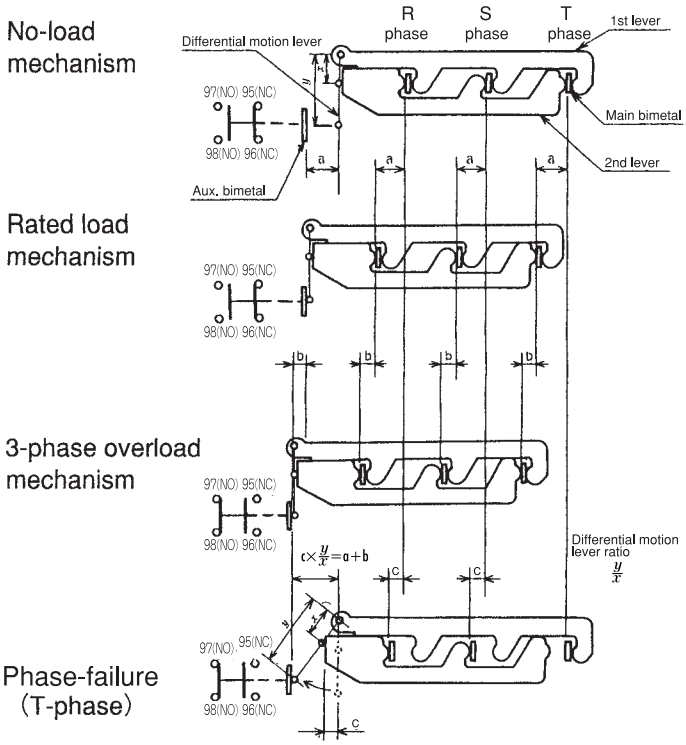

## Selection guide

220V motor

| Heating value (A) | Motor (kW) | Model | | | | | | | | | | | | | | | | | | | |
|---|---|---|---|---|---|---|---|---|---|---|---|---|---|---|---|---|---|---|---|---|---|
| | | TJ-18JA | TJ-18 | | | | TJ-35 | | | TJ-50 | | | TJ-125 | | | TJ-220 | | T-400 | T-600 |
| | | TJ-18JA-3 | TJ-18-3 | | | | TJ-35-3 | | | TJ-50-3 | | | TJ-125-3 | | | TJ-220-3 | | | |
| | | GTJ-18JA | GTJ-18 | | | | GTJ-35 | | | GTJ-50 | | | GTJ-125 | | | GTJ-220 | | GT-400 | GT-600 |
| | | General purpose contactor to be combined | | | | | | | | | | | | | | | | | | | |
| | | 6JC | 11J | 12J | 20J | 21J | 26J | 35J | 50J | 50H | 65H | 80H | 95H | 100H | 125H | 150H | 220H | 270H | 300J | 400J | 600J |
| 0.7 | 0.1 | | | | | | | | | | | | | | | | | | | | |
| 1.2 | 0.2 | | | | | | | | | | | | | | | | | | | | |
| 2.3 | 0.4 | | | | | | | | | | | | | | | | | | | | |
| 3.6 | 0.75 | | | | | | | | | | | | | | | | | | | | |
| 5 | 1.1 | | | | | | | | | | | | | | | | | | | | |
| 6.7 | 1.5 | | | | | | | | | | | | | | | | | | | | |
| 9.2 | 2.2 | | | | | | | | | | | | | | | | | | | | |
| 11 | 2.5 | | | | | | | | | | | | | | | | | | | | |
| 11 | 2.7 | | | | | | | | | | | | | | | | | | | | |
| 15 | 3.7 | | | | | | | | | | | | | | | | | | | | |
| 18 | 4 | | | | | | | | | | | | | | | | | | | | |
| 18 | 4.5 | | | | | | | | | | | | | | | | | | | | |
| 22 | 5.5 | | | | | | | | | | | | | | | | | | | | |
| 26 | 7.5 | | | | | | | | | | | | | | | | | | | | |
| 35 | 10 | | | | | | | | | | | | | | | | | | | | |
| 42 | 11 | | | | | | | | | | | | | | | | | | | | |
| 56 | 15 | | | | | | | | | | | | | | | | | | | | |
| 65 | 18.5 | | | | | | | | | | | | | | | | | | | | |
| 70 | 20 | | | | | | | | | | | | | | | | | | | | |
| 80 | 22 | | | | | | | | | | | | | | | | | | | | |
| 90 | 25 | | | | | | | | | | | | | | | | | | | | |
| 105 | 27 | | | | | | | | | | | | | | | | | | | | |
| 105 | 30 | | | | | | | | | | | | | | | | | | | | |
| 130 | 37 | | | | | | | | | | | | | | | | | | | | |
| 130 | 40 | | | | | | | | | | | | | | | | | | | | |
| 160 | 45 | | | | | | | | | | | | | | | | | | | | |
| 180 | 55 | | | | | | | | | | | | | | | | | | | | |
| 200 | 60 | | | | | | | | | | | | | | | | | | | | |
| 240 (240) | 75 | | | | | | | | | | | | | | | | | | | | |
| 275 | 80 | | | | | | | | | | | | | | | | | | | | |
| 310 | 90 | | | | | | | | | | | | | | | | | | | | |
| 380 (300) | 90 | | | | | | | | | | | | | | | | | | | | |
| 380 (300) | 110 | | | | | | | | | | | | | | | | | | | | |
| 400 | 115 | | | | | | | | | | | | | | | | | | | | |
| 500 (500) | 132 | | | | | | | | | | | | | | | | | | | | |
| 500 (500) | 150 | | | | | | | | | | | | | | | | | | | | |
| 600 | 160 | | | | | | | | | | | | | | | | | | | | |

Note. ①Load current will be different for 3-phase motors with other than four poles, and for non-standard motors. Selected the rated current appropriate for each motor in this case.
②If the same rated current is not available, select the closest current and use the adjusting dial to match it to the rated motor current.
③Rated current in parentheses indicates for GT-400 and GT-600 models.

440V motor

| Heating value (A) | Motor (kW) | Model | | | | | | | | | | | | | | | | | | | |
|---|---|---|---|---|---|---|---|---|---|---|---|---|---|---|---|---|---|---|---|---|---|
| | | TJ-18JA | TJ-18 | | | | TJ-35 | | | TJ-50 | | | TJ-125 | | | TJ-220 | | T-400 | T-600 |
| | | TJ-18JA-3 | TJ-18-3 | | | | TJ-35-3 | | | TJ-50-3 | | | TJ-125-3 | | | TJ-220-3 | | | |
| | | GTJ-18JA | GTJ-18 | | | | GTJ-35 | | | GTJ-50 | | | GTJ-125 | | | GTJ-220 | | GT-400 | GT-600 |
| | | General purpose contactor to be combined | | | | | | | | | | | | | | | | | | | |
| | | 6JC | 11J | 12J | 20J | 21J | 26J | 35J | 50J | 50H | 65H | 80H | 95H | 100H | 125H | 150H | 220H | 270H | 300J | 400J | 600J |
| 0.35 | 0.1 | | | | | | | | | | | | | | | | | | | | |
| 0.7 | 0.2 | | | | | | | | | | | | | | | | | | | | |
| 1.2 | 0.4 | | | | | | | | | | | | | | | | | | | | |
| 1.8 | 0.75 | | | | | | | | | | | | | | | | | | | | |
| 2.5 | 1.1 | | | | | | | | | | | | | | | | | | | | |
| 3 | 1.5 | | | | | | | | | | | | | | | | | | | | |
| 4.6 | 2.2 | | | | | | | | | | | | | | | | | | | | |
| 5.5 | 2.5 | | | | | | | | | | | | | | | | | | | | |
| 6 | 2.7 | | | | | | | | | | | | | | | | | | | | |
| 7.5 | 3.7 | | | | | | | | | | | | | | | | | | | | |
| 7.5 | 4 | | | | | | | | | | | | | | | | | | | | |
| 9.5 | 4.5 | | | | | | | | | | | | | | | | | | | | |
| 11 | 5.5 | | | | | | | | | | | | | | | | | | | | |
| 15 | 7.5 | | | | | | | | | | | | | | | | | | | | |
| 22 | 11 | | | | | | | | | | | | | | | | | | | | |
| 30 | 15 | | | | | | | | | | | | | | | | | | | | |
| 34 | 18.5 | | | | | | | | | | | | | | | | | | | | |
| 35 | 20 | | | | | | | | | | | | | | | | | | | | |
| 39 | 22 | | | | | | | | | | | | | | | | | | | | |
| 42 | 25 | | | | | | | | | | | | | | | | | | | | |
| 45 | 26 | | | | | | | | | | | | | | | | | | | | |
| 48 | 27 | | | | | | | | | | | | | | | | | | | | |
| 62 | 30 | | | | | | | | | | | | | | | | | | | | |
| 68 | 37 | | | | | | | | | | | | | | | | | | | | |
| 68 | 40 | | | | | | | | | | | | | | | | | | | | |
| 80 | 45 | | | | | | | | | | | | | | | | | | | | |
| 105 | 55 | | | | | | | | | | | | | | | | | | | | |
| 125 | 60 | | | | | | | | | | | | | | | | | | | | |
| 130 | 75 | | | | | | | | | | | | | | | | | | | | |
| 130 | 80 | | | | | | | | | | | | | | | | | | | | |
| 160 | 90 | | | | | | | | | | | | | | | | | | | | |
| 220 | 110 | | | | | | | | | | | | | | | | | | | | |
| 230 | 115 | | | | | | | | | | | | | | | | | | | | |
| 270 | 132 | | | | | | | | | | | | | | | | | | | | |
| 240 (300) | 150 | | | | | | | | | | | | | | | | | | | | |
| 380 (300) | 200 | | | | | | | | | | | | | | | | | | | | |
| 380 (380) | 200 | | | | | | | | | | | | | | | | | | | | |
| 500 (500) | 300 | | | | | | | | | | | | | | | | | | | | |

Note. ①Load current will be different for 3-phase motors with other than four poles, and for non-standard motors. Selected the rated current appropriate for each motor in this case.
②If the same rated current is not available, select the closest current and use the adjusting dial to match it to the rated motor current.
③Rated current in parentheses indicates for GT-400 and GT-600 models.

## Auxiliary contact rating

●Conforming to IEC, JIS

| Model | Rated thermal current〔A〕 | Rated voltage〔V〕 | Rated operational current〔A〕 | | | | Minimum operational voltage/current |
|---|---|---|---|---|---|---|---|
| | | | AC-15 | | DC-13 | | |
| | | | 1NO | 1NC | 1NO | 1NC | |
| TJ-18 GTJ-18 | 5 | 24 | 4 | 4 | 2 | 2 | DC12V, 10mA |
| | | 100～110 | 2 | 3 | 0.35 | 0.35 | |
| | | 200～220 | 1 | 2 | 0.20 | 0.20 | |
| | | 380～440 | 0.5 | 1.5 | – | – | |
| | | 500～550 | 0.4 | 0.7 | – | – | |
| TJ-35 125 GTJ-35～125 | 5 | 24 | 4 | 4 | 2 | 2 | DC12V, 10mA |
| | | 100～110 | 2 | 3 | 0.35 | 0.35 | |
| | | 200～220 | 1 | 2 | 0.20 | 0.20 | |
| | | 380～440 | 0.5 | 1.5 | – | – | |
| | | 500～550 | 0.8 | 1.0 | – | – | |

●Conforming to UL

| Model | Rated thermal current〔A〕 | Rated voltage〔V〕 | Rated operational current〔A〕 | | | | Minimum operational voltage/current |
|---|---|---|---|---|---|---|---|
| | | | AC-15 | | DC-13 | | |
| | | | 1NO | 1NC | 1NO | 1NC | |
| TJ-18-3UL TJ-18-UL | 5 | 24 | 4 | 4 | 2 | 2 | B600 |
| | | 100～110 | 2 | 3 | 0.35 | 0.35 | |
| | | 200～220 | 1 | 2 | 0.20 | 0.20 | |
| | | 380～440 | 0.5 | 1.5 | – | – | |
| | | 500～550 | 0.4 | 0.7 | – | – | |
| TJ-35～GTJ-35 50-3UL～50-UL | 5 | 24 | 4 | 4 | 2 | 2 | B600 |
| | | 100～110 | 2 | 3 | 0.35 | 0.35 | |
| | | 200～220 | 1 | 2 | 0.20 | 0.20 | |
| | | 380～440 | 0.5 | 1.5 | – | – | |
| | | 500～550 | 0.8 | 1.0 | – | – | |

## Handling of thermal overload relays

Do not touch the inside of the thermal overload relays.

If the motor stops because of the tripping operation of thermal overload relay, gently press down the reset button for resetting only after the cause is traced and removed.

(Factory setting is manual reset.)

In case of TJ-18～220, if auto resetting is desired, press the reset button down and turn it 90 degree clockwise.

In case of T-400 and T-600, press the reset button down and turn it 90 degree anticlockwise.

In an automatic control circuit in which a self-holding starter contactor is not used, the motor starts automatically by automatically resetting the thermal overload relay.

This may result in motor burnout if care is not taken.

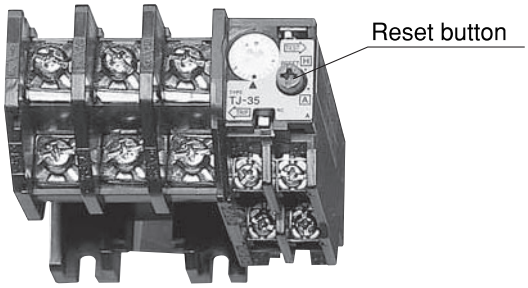

## Operation characteristic curves

TJ−18JA
TJ−18
TJ−18N
TJ−18JA−3
TJ−18−3
TJ−18N−3
GTJ−18JA
GTJ−18
GTJ−18N

### Trip class 10A

Cold start characteristics

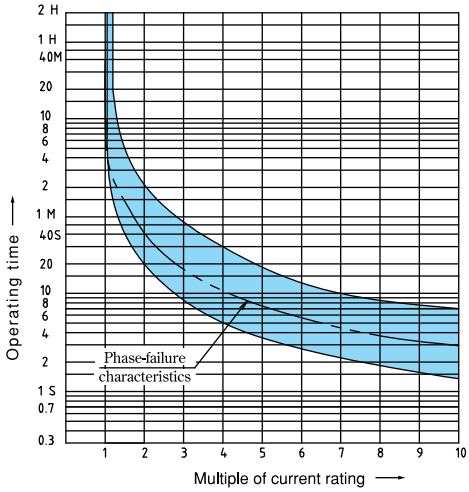


Hot start characteristics

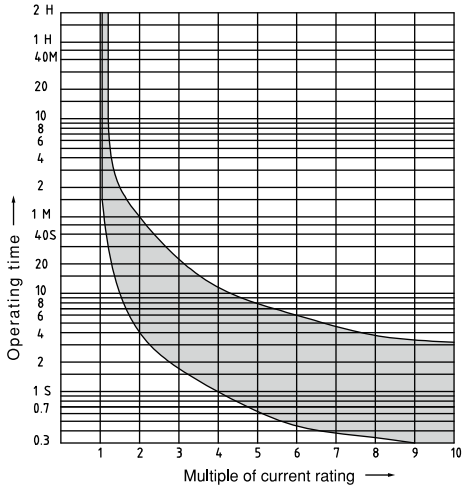


TJ−35
TJ−35−3
GJT−35

### Less than 18A - Trip class 10A More than 22A - Trip class 20

Cold start characteristics

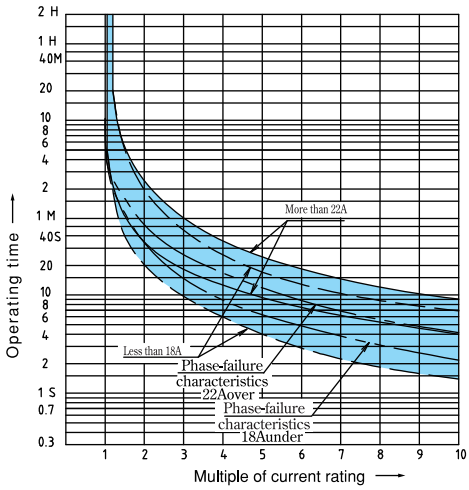


Hot start characteristics

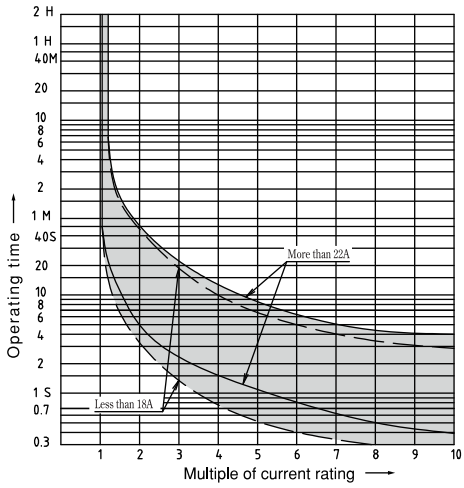


TJ−50
TJ−50−3
GTJ−50

### Less than 18A - Trip class 10A More than 22A - Trip class 20

Cold start characteristics

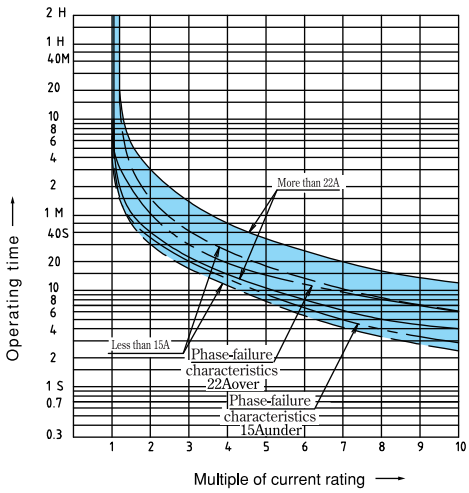


Hot start characteristics

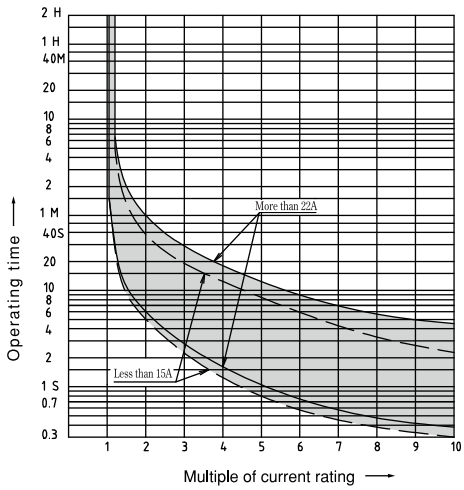

3

TJ−125
TJ−125−3
GTJ−125

## Trip class-20

Cold start characteristics

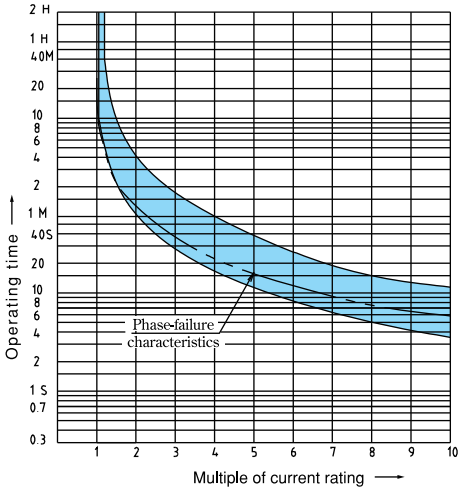


Hot start characteristics

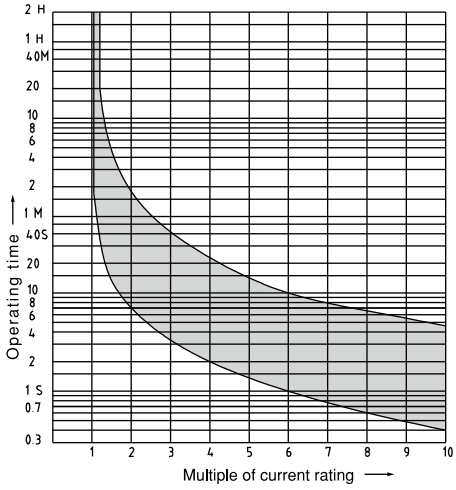


TJ−220
TJ−220−3
GTJ−220

## Trip class-10A

Cold start characteristics

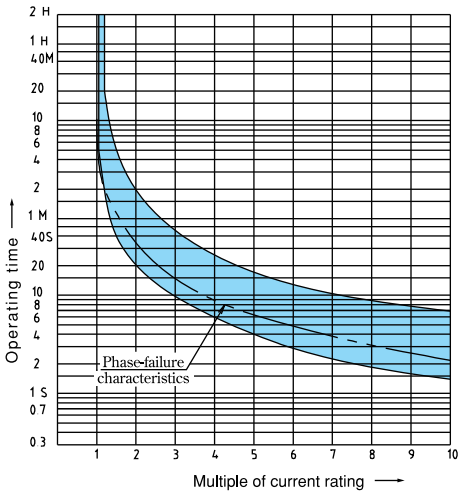


Hot start characteristics

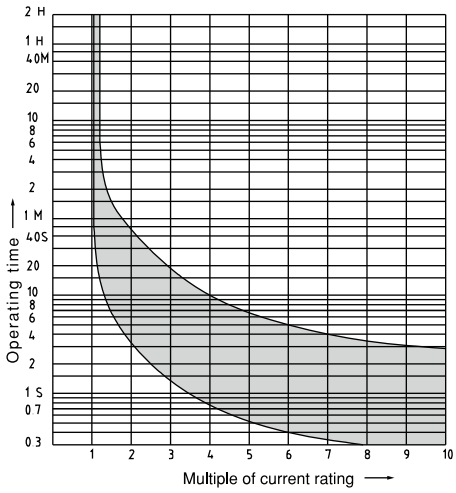


TJ−400N
TJ−400N−3
GTJ−400N

## Trip class-10A

Cold start characteristics

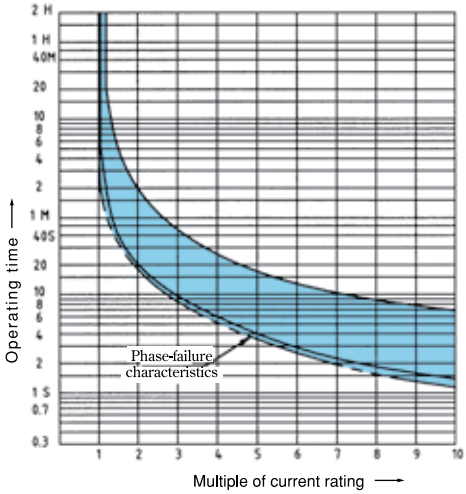


Hot start characteristics

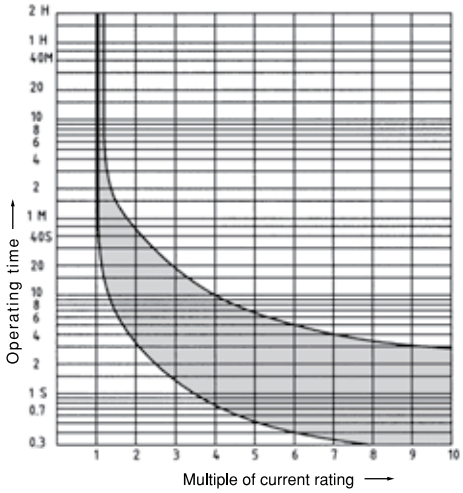

T−400
GT−400

Trip class-10A

Cold start characteristics

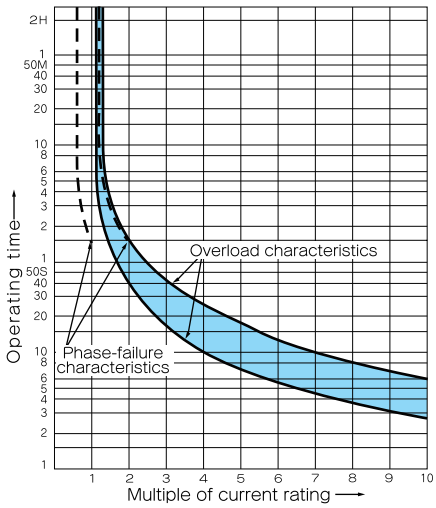


Hot start characteristics

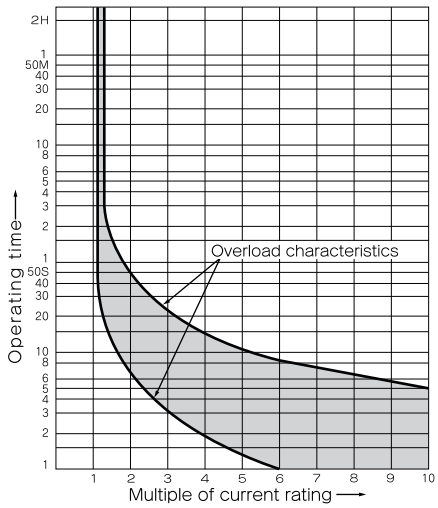


T−600
GT−600

Trip class-10A

Cold start characteristics

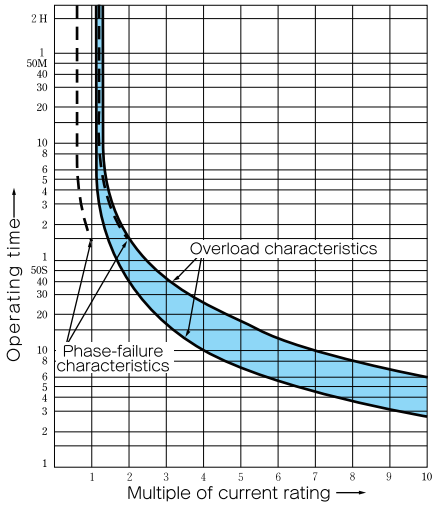


Hot start characteristics

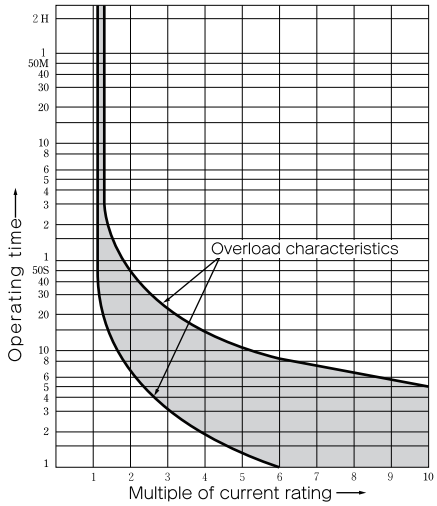


## Ambient temperature compensation

Thermal overload relays are provided with an ambient temperature compensating mechanism. At temperature between -20℃ and +60℃, the operation is automatically compensated. The automatic compensating characteristics are showing the minimum operating current based on temperature of 20℃.

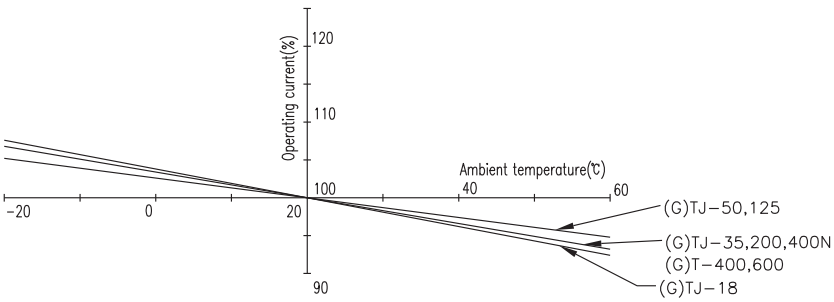

# Fast-Trip models

## Features

- It is best for protection of compressor motor, under water pump motor etc. from overload and locking.
- With operating indication.
  An output contact is electrically insulated contact of 1NO1NC.
- Automatic compensation for ambient temperature.
  Operating current will automatically adjusted throughout the ambient temperature range of -20 to +60℃.
- One-touch selection of manual or automatic reset.
  Just press the reset button then turn 90 degree for change over the resetting method.
- TJ-18N,TJ-35～TJ-125 and TJ-400N can be used independently.
- Factory-seted rated thermal current is fixed.



## Operation characteristic curves

TJ−18JA−F~125−F
TJ−18JA−3F~125−3F

Cold start characteristics

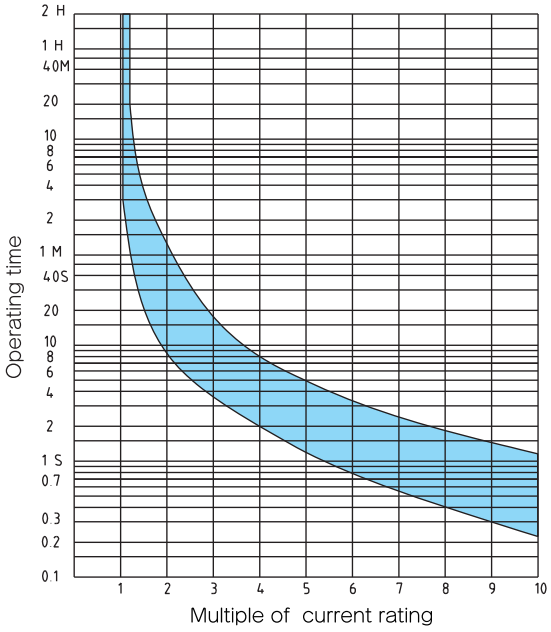


Hot start characteristics

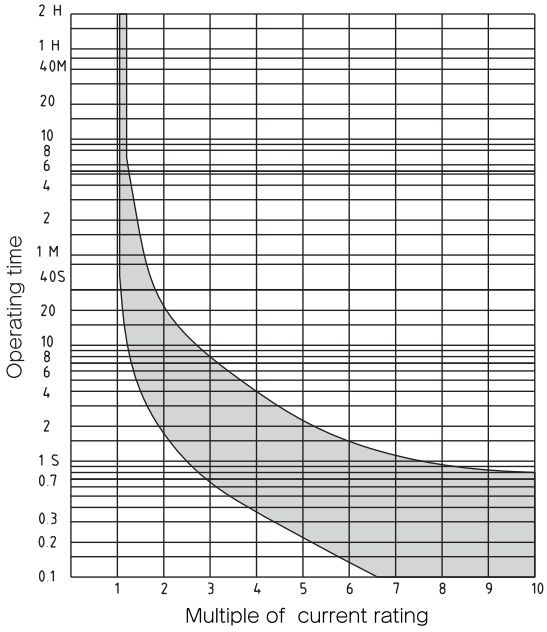


GTJ−18JA−F~125−F

Cold start characteristics

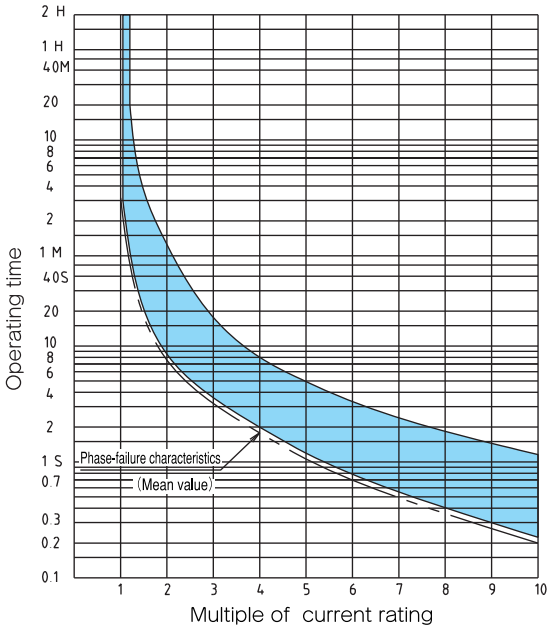


Hot start characteristics

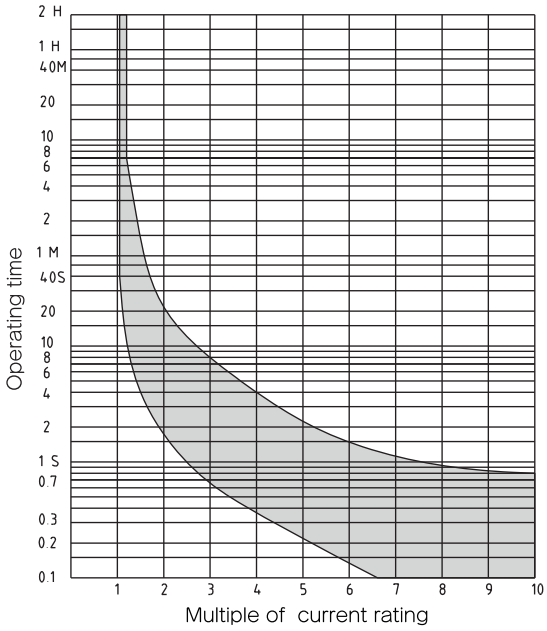

| | |
|---|---|
| TJ−18JA | TJ−18JA−F |
| TJ−18 | TJ−18−F |
| TJ−18JA−3 | TJ−18JA−3F |
| TJ−18−3 | TJ−18−3F |
| GTJ−18JA | GTJ−18JA−F |
| GTJ−18 | GTJ−18−F |

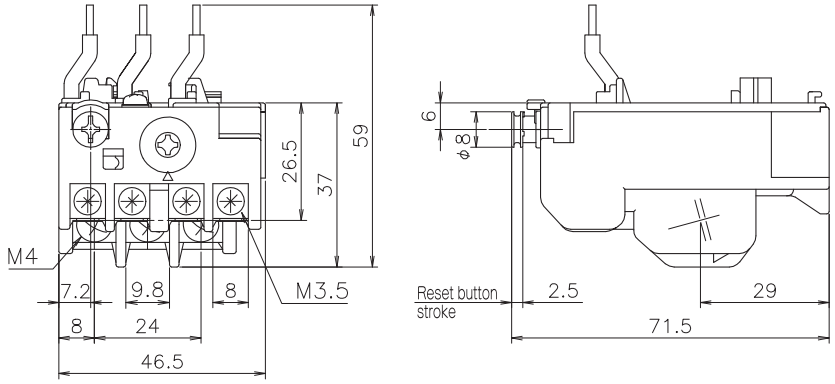


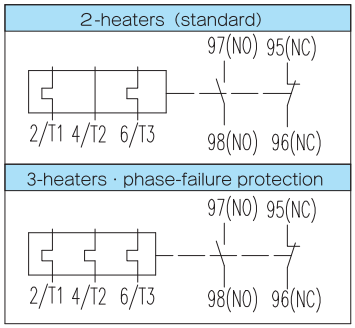


Weight 0.09kg

| | |
|---|---|
| TJ−18N | TJ−18N−F |
| TJ−18N−3 | TJ−18N−3F |
| GTJ−18N | GTJ−18N−F |

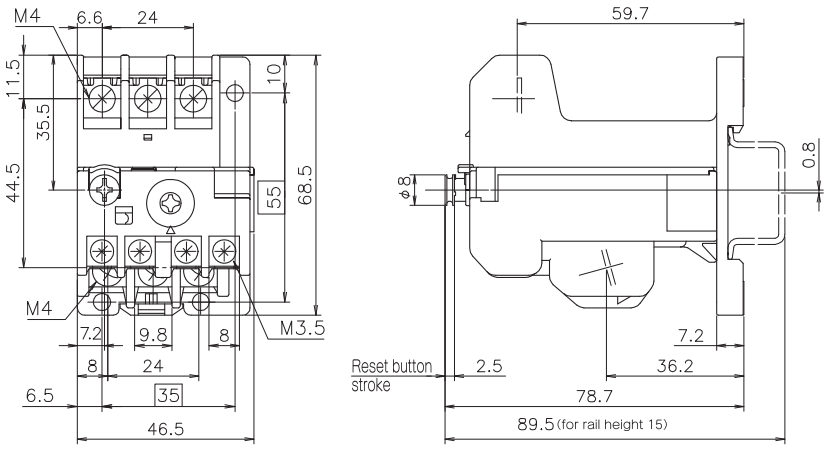


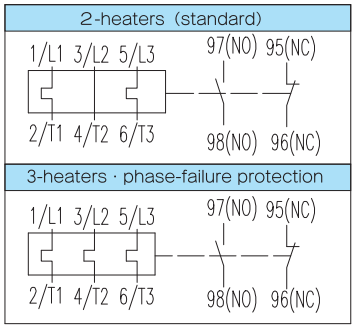


Weight 0.13kg

| | |
|---|---|
| TJ−35 | TJ−35−F |
| TJ−35−3 | TJ−35−3F |
| GTJ−35 | GTJ−35−F |

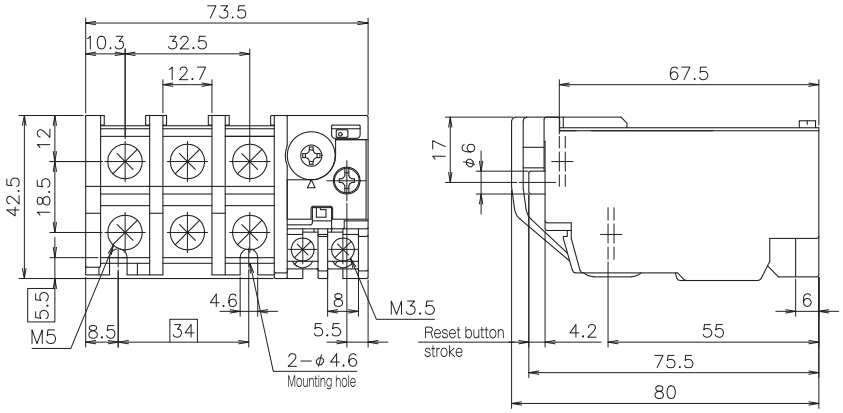


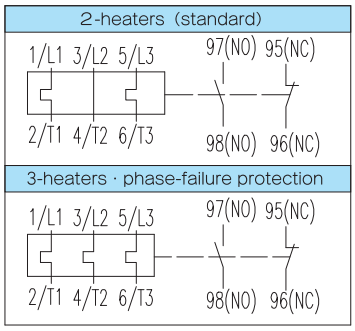


Weight 0.2kg

3

TJ−50 TJ−50−F
TJ−50−3 TJ−50−3F
GTJ−50 GTJ−50−F

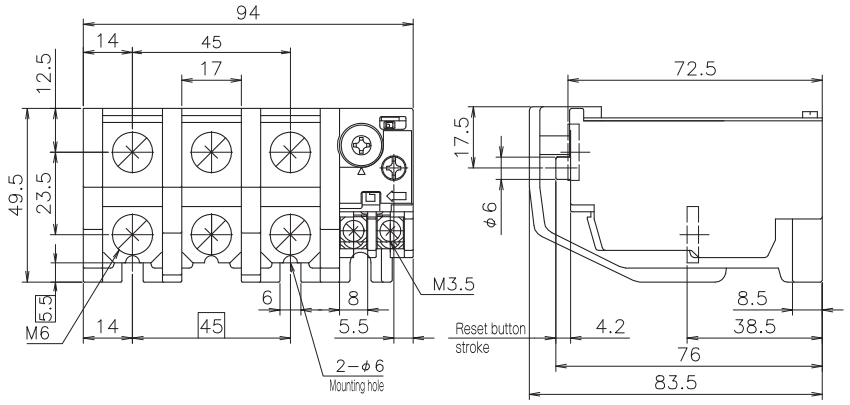


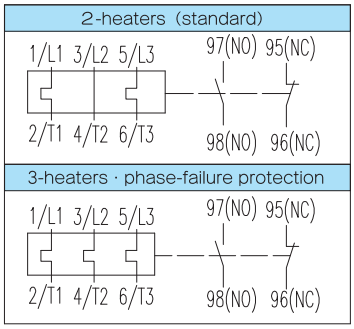


Weight 0.38kg

TJ−125 TJ−125−F
TJ−125−3 TJ−125−3F
GTJ−125 GTJ−125−F

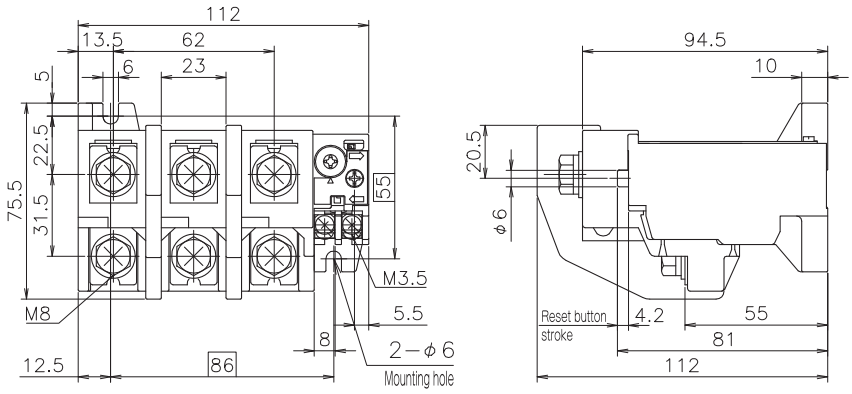


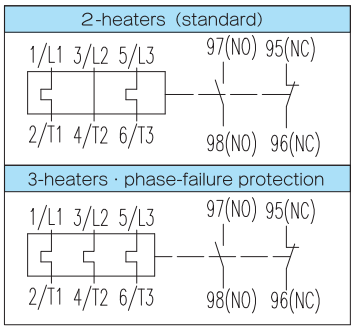


Weight 0.6kg

TJ−220
TJ−220−3
GTJ−220

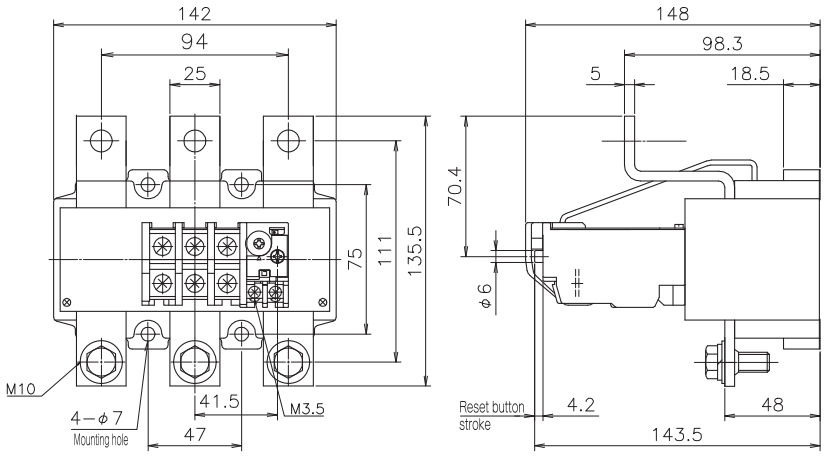


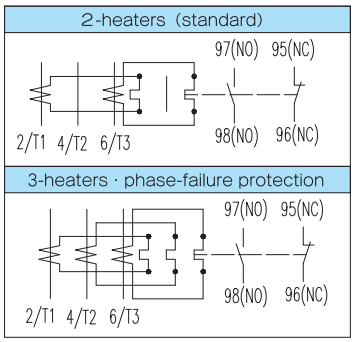


Weight 2.3kg

TJ−400N
TJ−400N−3
GTJ−400N

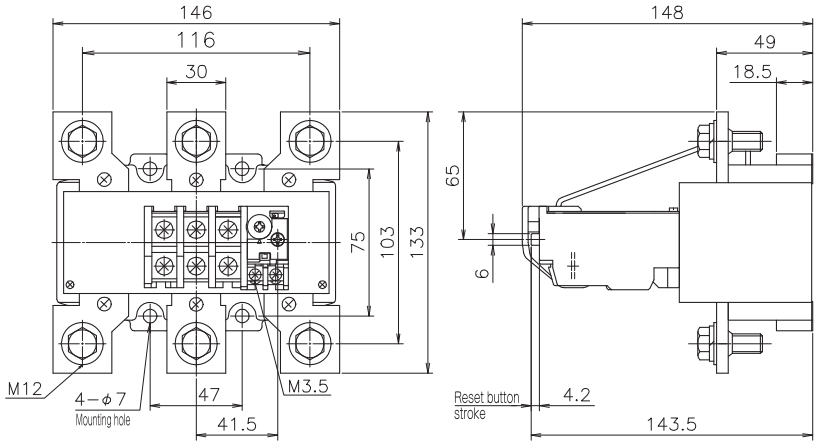


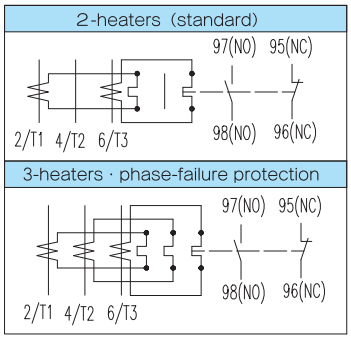


Weight 2.5kg

T−400
GT−400

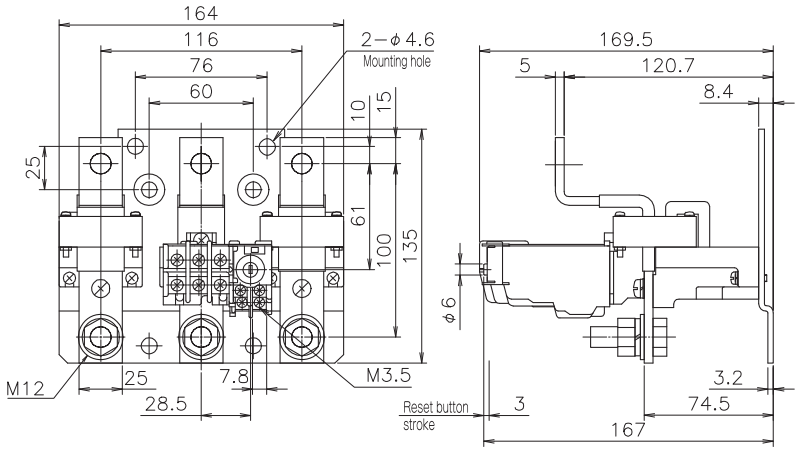


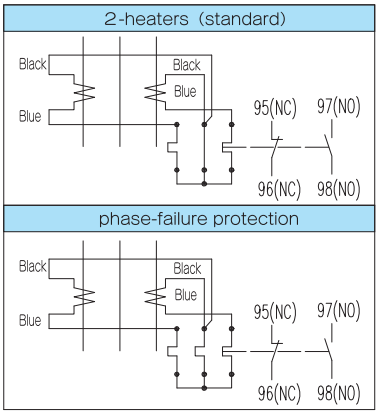


Weight 2.0kg

T−600
GT−600

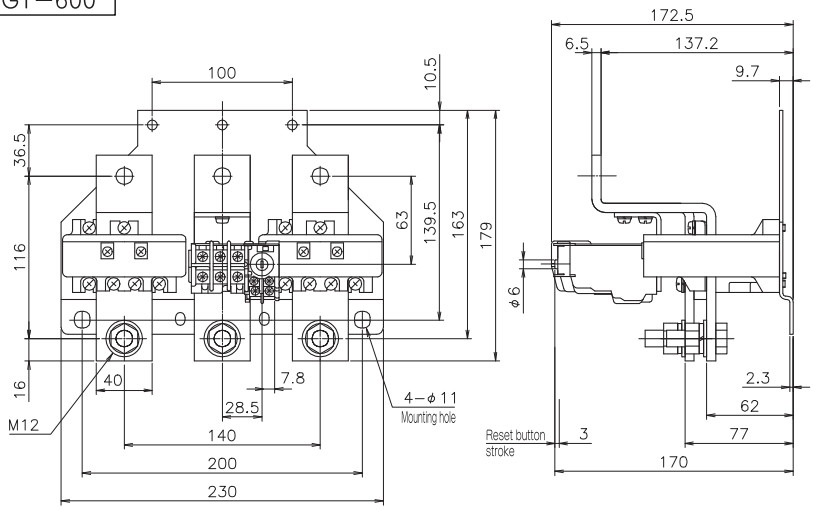


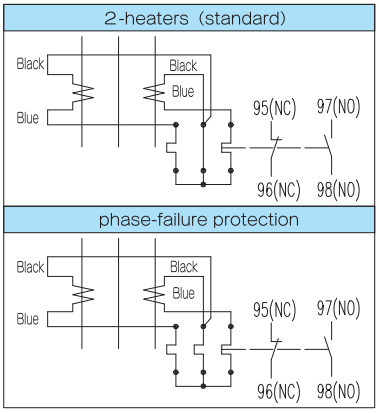


Weight 5.0kg

## Ratings and specifications

| Item \ Model | | | HAU-2 | HAU-4 | HAU-BL | HAU-BR |
|---|---|---|---|---|---|---|
| Used with | | | PAK-11J～95H | | PAK-100H～270H | |
| Rated thermal current | | | 10A | | | |
| Rated operational current | AC-15 | AC100-110V | 10A | | | |
| | | AC200-220V | 6A | | | |
| | | AC380-440V | 3A | | | |
| | | AC500-550V | 3A | | | |
| | DC-13 | DC48V | 2A | | | |
| | | DC100-110V | 1A | | | |
| | | DC200-220V | 0.25A | | | |
| Performance | Mechanical life | | 5 million operations. | | | |
| | Electrical life | | 1 million operations. | | | |

Notes. ①Minimum operating voltage and current is 24V 10mA
②HAU-BL is mounted on left side of contactor, and HAU-BR on right side. Both must be mounted, respectivery, at the same time.

Auxiliary contacts can be added as needed.

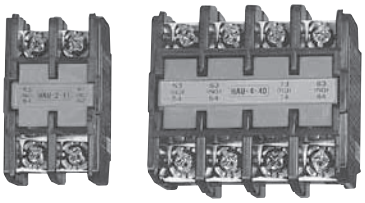

HAU-2 HAU-4

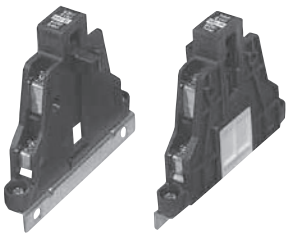

HAU-BL・BR

## Dimensions

HAU-2（2P）

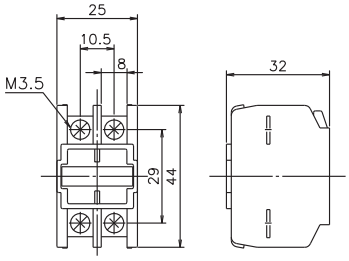


Weight 0.025kg

HAU-4（4P）

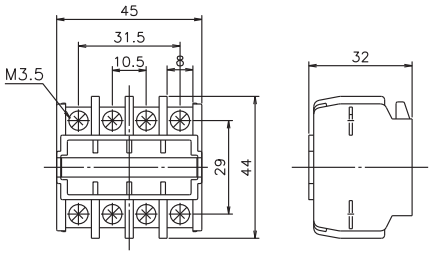


Weight 0.045kg

HAU-BL・HAU-BR

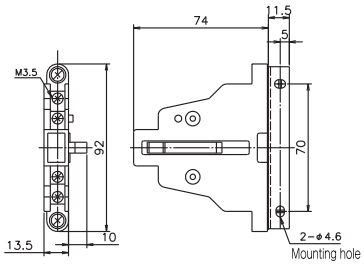


Weight 0.07kg

## Contact configuration

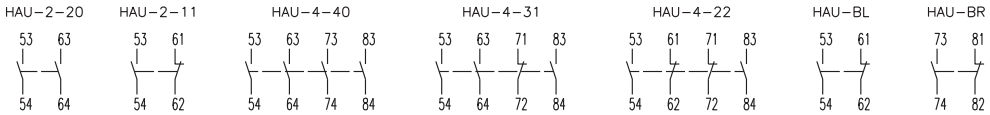


## Unit mounting dimensions

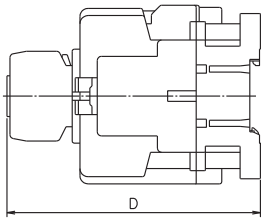


(in mm)

| Model | PAK-11J | PAK-12J | PAK-20J | PAK-21J | PAK-26J | PAK-35J | PAK-50J | PAK-50H | PAK-65H | PAK-80H | PAK-95H |
|---|---|---|---|---|---|---|---|---|---|---|---|
| Dimension D | 103.5 | | 107 | | 124.5 | | | 140.5 | | | |

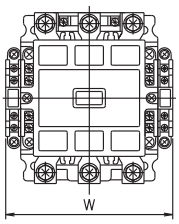


(in mm)

| Model | PAK-100H | PAK-125H | PAK-150H | PAK-220H | PAK-270H |
|---|---|---|---|---|---|
| Dimensions W | 131 | | 152 | | |

Note. HAU-BL and BR must be mounted on left and right, respectively, at the same time.

# No-Loss latch units

## Ratings and specifications

| Item \ Model | HL-B |
|---|---|
| Used with | PAK-50～95H |
| Operating coil rating<br>（TC coil）5s rating | 100-110V 50／60Hz<br>200-220V 50／60Hz |

If PAK-J type is used as a mechanical-latching starter, Built-in type magnetic contactors PAK-JL type shall be provided.

Adding a no-loss latch unit makes it possible to use the contactor as a mechanical-latching type magnetic starter.

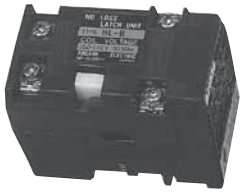

HL-B

## Dimensions

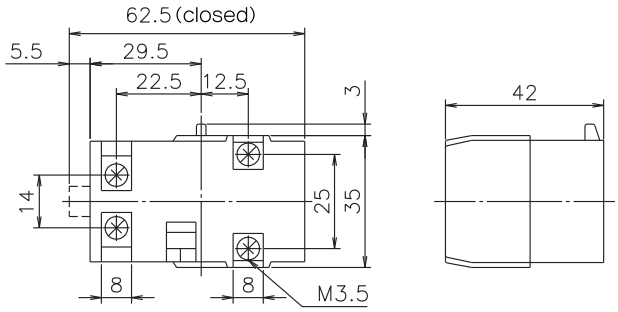


Weight 0.1kg

## Unit mounting dimensions

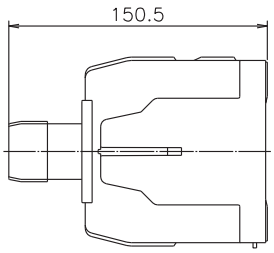


## Connection diagram

The diagram shows the connection when the push button has been used. Please contact us for further infomation of automatic operation setting, Please use Togami's PBP-2M push button.

PAK-50H～95H

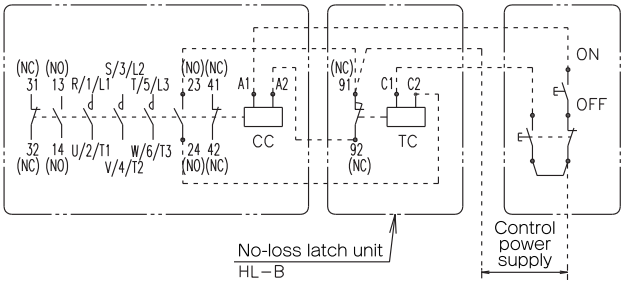


PAK-50HTC～95HTC

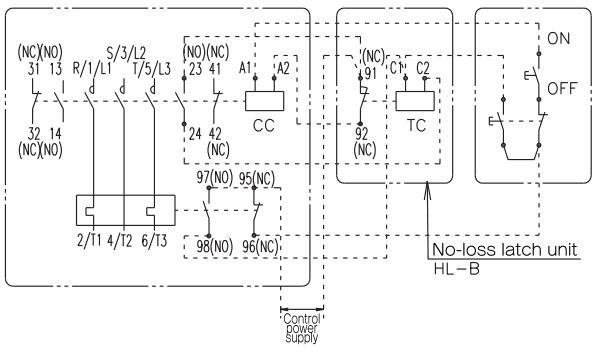


CC：Closing coil
TC：Tripping coil

Prevents terminal exposure and enhances safety.
Therminal covers comforming to
DIN 57106/VDE 0106 Teil 100 standards for
protection against live parts.

PAK-6JTC with terminal covers.

4

## Application

| For | | Type name | List of compornents | |
|---|---|---|---|---|
| | | | Protected area | Quantity |
| Magnetic contactor | PAK-6JC | C-21 | Main, auxiliary and coil terminals | 1 |
| | PAK-11J<br>PAK-12J | C-11 | Main and auxiliary terminals | 2(one each, power supply and load) |
| | | | Coil terminals | 1 |
| | PAK-20J | C-12 | Main and auxiliary terminals | 2(one each, power supply and load) |
| | | | Coil terminals | 1 |
| | PAK-21J | C-13 | Main and auxiliary terminals | 2(one each, power supply and load) |
| | | | Coil terminals | 1 |
| | PAK-26J<br>PAK-35J<br>PAK-50J | C-14 | Main terminals | 2(one each, power supply and load) |
| | | | Auxiliary terminals | 2(one each, left and right) |
| | | | Coil terminals | 1 |
| Magnetic starter | PAK-6JTC<br>PAK-6JGTC<br>PAK-6JT-3C | C-21 | Main, auxiliary and coil terminals | 1 |
| | | TC-22 | Main terminals | 1 |
| | | | Auxiliary terminals | 1 |
| | PAK-11,12JTC<br>PAK-11,12JGTC<br>PAK-11,12JT-3C | C-11 | Main and auxiliary terminals | 2(one each, power supply and load) |
| | | | Coil terminals | 1 |
| | | TC-22 | Main terminals | 1 |
| | | | Auxiliary terminals | 1 |
| | PAK-20JTC<br>PAK-20JGTC<br>PAK-20JT-3C | C-12 | Main and auxiliary terminals | 2(one each, power supply and load) |
| | | | Coil terminals | 1 |
| | | TC-22 | Main terminals | 1 |
| | | | Auxiliary terminals | 1 |
| | PAK-21JTC<br>PAK-21JGTC<br>PAK-21JT-3C | C-13 | Main and auxiliary terminals | 2(one each, power supply and load) |
| | | | Coil terminals | 1 |
| | | TC-22 | Main terminals | 1 |
| | | | Auxiliary terminals | 1 |
| | PAK-26,35,50JT(C)<br>PAK-26,35,50JGT(C)<br>PAK-26,35,50JT-3(C) | C-14 | Main terminals | 2(one each, power supply and load) |
| | | | Auxiliary terminals | 2(one each, left and right) |
| | | | Coil terminals | 1 |
| | | TC-25 | Main terminals | 1 |
| | | | Auxiliary terminals | 2 |

Notes. ①For magnetic starter, please order both the cover for magnetic contactor (C-type) and the cover for thermal overload relay(TC-type).
②Terminal cover is packed in each model type.

| For | | Type name | List of compornents | |
|---|---|---|---|---|
| | | | Protected area | Quantity |
| Reversing magnetic contactor | RSK-11J | C-10R | Main and auxiliary terminals | 4(M1,M2 one each, power supply and load) |
| | | | Coil terminals | 2(M1,M2 one each) |
| | RSK-12J | C-11R | Main and auxiliary terminals | 4(M1,M2 one each, power supply and load) |
| | | | Coil terminals | 2(M1,M2 one each) |
| | | | Mechanical interlock | 1 |
| | RSK-20J | C-12R | Main and auxiliary terminals | 4(M1,M2 one each, power supply and load) |
| | | | Coil terminals | 2(M1,M2 one each) |
| | | | Mechanical interlock | 1 |
| | RSK-21J | C-13R | Main and auxiliary terminals | 4(M1,M2 one each, power supply and load) |
| | | | Coil terminals | 2(M1,M2 one each) |
| | | | Mechanical interlock | 1 |
| | RSK-26J<br>RSK-35J<br>RSK-50J | C-14R | Main terminals | 4(M1,M2 one each, power supply and load) |
| | | | Auxiliary terminals | 4(M1,M2 one each, left and right) |
| | | | Coil terminals | 2(M1,M2 one each) |
| | | | Mechanical interlock | 1 |
| Reversing magnetic starter | RSK-11JTC<br>RSK-11JGTC<br>RSK-11JT-3C | C-10R | Main and auxiliary terminals | 4(M1,M2 one each, power supply and load) |
| | | | Coil terminals | 2(M1,M2 one each) |
| | | TC-22 | Main terminals | 1 |
| | | | Auxiliary terminals | 1 |
| | RSK-12JTC<br>RSK-12JGTC<br>RSK-12JT-3C | C-11R | Main and auxiliary terminals | 4(M1,M2 one each, power supply and load) |
| | | | Coil terminals | 2(M1,M2 one each) |
| | | | Mechanical interlock | 1 |
| | | TC-22 | Main terminals | 1 |
| | | | Auxiliary terminals | 1 |
| | RSK-20JTC<br>RSK-20JGTC<br>RSK-20JT-3C | C-12R | Main and auxiliary terminals | 4(M1,M2 one each, power supply and load) |
| | | | Coil terminals | 2(M1,M2 one each) |
| | | | Mechanical interlock | 1 |
| | | TC-22 | Main terminals | 1 |
| | | | Auxiliary terminals | 1 |
| | RSK-21JTC<br>RSK-21JGTC<br>RSK-21JT-3C | C-13R | Main and auxiliary terminals | 4(M1,M2 one each, power supply and load) |
| | | | Coil terminals | 2(M1,M2 one each) |
| | | | Mechanical interlock | 1 |
| | | TC-22 | Main terminals | 1 |
| | | | Auxiliary terminals | 1 |
| | RSK-26,35,50JT(C)<br>RSK-26,35,50JGT(C)<br>RSK-26,35,50JT-3(C) | C-14R | Main terminals | 4(M1,M2 one each, power supply and load) |
| | | | Auxiliary terminals | 4(M1,M2 one each, left and right) |
| | | | Coil terminals | 2(M1,M2 one each) |
| | | | Mechanical interlock | 1 |
| | | TC-25 | Main terminals | 1 |
| | | | Auxiliary terminals | 2 |
| Auxiliary contact unit | HAU-2 | C-31 | Terminals | 1 |
| | HAU-4 | C-32 | Terminals | 1 |

Notes. ①For magnetic starter, please order both the cover for magnetic contactor (C-type) and the cover for thermal overload velay(TC-type).
②Terminal cover is packed in each model type.

| For | | Type name | List of compornents | |
|---|---|---|---|---|
| | | | Protected area | Quantity |
| Magnetic relay | PAK-8JS (4P) | C-11 | Auxiliary terminals | 2(one each, power supply and load) |
| | | | Coil terminals | 1 |
| | PAK-8JS (6P) | C-11 | Main unit auxiliary terminals | 2(one each, power supply and load) |
| | | | Main unit coil terminals | 1 |
| | | C-31 | HAU terminals | 1 |
| | PAK-8JS (8P) | C-11 | Main unit auxiliary terminals | 2(one each, power supply and load) |
| | | | Main unit coil terminals | 1 |
| | | C-32 | HAU terminals | 1 |
| Thermal overload relay | TJ-18JA<br>TJ-18<br>GTJ-18JA<br>GTJ-18<br>TJ-18JA-3<br>TJ-18-3 | TC-22 | Main terminal | 1 |
| | | | Auxiliary terminals | 1 |
| | TJ-18N<br>GTJ-18N<br>TJ-18N-3 | TC-22N | Main terminal (Power supply side) | 1 |
| | | | 〃 (Load side) | 1 |
| | | | Auxiliary terminals | 1 |
| | TJ-35<br>GTJ-35<br>GTJ-35-3 | TC-25 | Main terminal | 1 |
| | | | Auxiliary terminals | 1 |

Notes. ①For magnetic starters, please order both the cover for magnetic contactor and the cover for thermal overload relay.
②For 6P and 8P magnetic relays, please order both magnetic relay and auxiliary contact unit HAU.
③Terminal cover is packed in each model.

The safety of the maintenance inspection is improved.

Color： Transparent

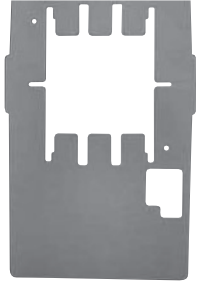

## Application and dimensions

Non-reversing magnetic contactor（C-4 to -9）

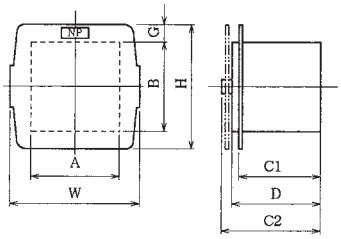


Non-reversing magnetic starter（TC-4 to -9）

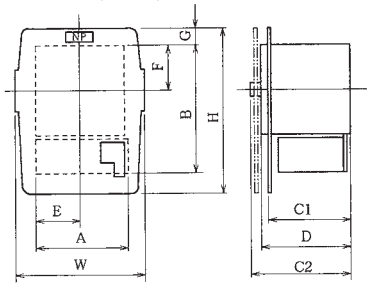


Reversing magnetic contactor（C-4R to -8R）

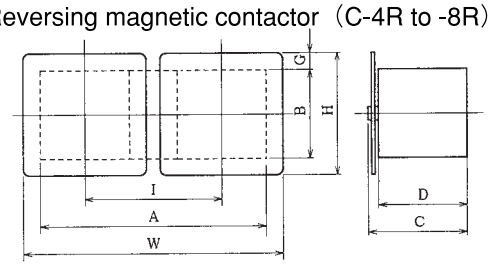


Reversing magnetic starter（TC-4R to -8R）

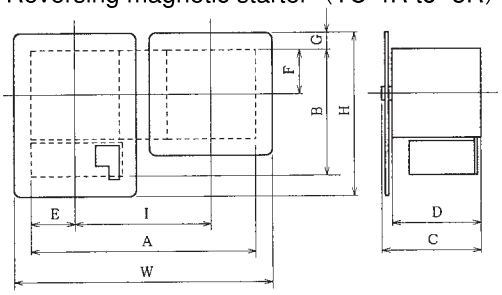


| Model | | | Used with | Dimensions（mm） | | | | | | | | | | |
|---|---|---|---|---|---|---|---|---|---|---|---|---|---|---|
| | | | | Terminal cover | | Reference dimensions | | | | | | | | |
| | | | | W | H | D | A | B | C1 | C2 | E | F | G | I |
| Magnetic contactor | Non reversing | C-4 | PAK-50～95H | 130 | 160 | 113.5 | 100 | 110 | 100 | — | — | — | 25 | — |
| | | C-5 | PAK-100～125H | 130 | 200 | 140 | 104 | 150 | — | 148 | — | — | 20 | — |
| | | C-6 | PAK-150H | 155 | 250 | 156.5 | 125 | 156 | — | 166 | — | — | 47 | — |
| | | | PAK-220H | | | | | 177 | | | | | 36.5 | |
| | | C-8 | PAK-300～400J | 171 | 330 | 200 | 187 | 240 | — | 205 | 81.5 | 120 | 45 | — |
| | | C-9 | PAK-600J | 310 | 460 | 232 | 284 | 316 | — | 235 | 130 | 158 | 72 | — |
| | | | PAK-800J | | | | | 380 | | | | 190 | 40 | |
| | Reversing | C-4R | RSK-50～95H | 222 | 150 | 129 | 224 | 147 | — | 135 | — | — | 1.5 | 112 |
| | | C-5R | RSK-100～125H | 261 | 200 | 150 | 270 | 160 | — | 158 | — | — | 15 | 131 |
| | | C-6R | RSK-150H | 311 | 250 | 166.5 | 305 | 156 | — | 176 | — | — | 47 | 156 |
| | | | RSK-220H | | | | | 177 | | | | | 36.5 | |
| | | C-8R | RSK-300～400J | 359 | 330 | 219 | 385 | 300 | — | 224 | 91 | 150 | 45 | 188 |
| Magnetic starter | Non reversing | TC-4 | PAK-50～95HT(C) | 130 | 210 | 113.5 | 107.5 | 160 | 100 | — | 50 | 55 | 25 | — |
| | | TC-5A | PAK-100～125HTC | 130 | 270 | 140 | 112 | 225.5 | — | 148 | 52 | 80 | 20 | — |
| | | TC-6A | PAK-150HTC | 155 | 320 | 156.5 | 125 | 231.5 | — | 166 | 62.5 | 78 | 47 | — |
| | | TC-7A | PAK-220HTC | | 360 | 157 | 142 | 287.5 | — | | 71 | 88.5 | 36.5 | — |
| | | TC-8 | PAK-300～400JT | 171 | 430 | 200 | 187 | 330 | — | 205 | 81.5 | 120 | 45 | — |
| | | TC-9 | PAK-600JT | 310 | 580 | 232 | 284 | 432 | — | 235 | 130 | 158 | 72 | — |
| | Reversing | TC-4R | RSK-50～95HT(C) | 222 | 205 | 129 | 224 | 188.5 | — | 135 | 50 | 83.5 | — | 112 |
| | | TC-5RA | RSK-100～125HTC | 261 | 270 | 150 | 270 | 232.5 | — | 158 | 52 | 85 | 15 | 131 |
| | | TC-6RA | RSK-150HTC | 311 | 320 | 166.5 | 305 | 250 | — | 176 | 62.5 | 97 | 28 | 156 |
| | | TC-7RA | RSK-220HTC | | 360 | 167 | | 308 | | | 71 | 109 | 16 | |
| | | TC-8R | RSK-300～400JT | 171 | 580 | 219 | 385 | 360 | — | 224 | 91 | 150 | 45 | 188 |

## Feature

Surge voltage generated from a coil is suppressed for electronic circuit protection.

Easily attachable by fitting together with the coil terminal.

Since this unit utilize the space below coil, increasement of fitting space is small.
(PAK-8JS, PAK-11J, 12J, 20J, 21J, RSK-11J, 12J, 20J, 21J)

Resin cover for, high insulation and reliability.

## Rating and specification

| Model | Rated voltage | Specification | | Supressed surge voltage |
|---|---|---|---|---|
| | | Surge absorption element | Constant | |
| SA-22 | AC/DC 100-250V | CR | C=0.22 μF R=120 Ω | 700V |
| SA-32 | | | | |
| SA-24 | AC 380-440V | Varistor | Varistor voltage 910V | 910V |
| SA-34 | | | | |

※Supressed surge voltage shows the maximum value, but not the guaranted value.

## Application

| Model | Rated voltage (Application coil voltage) | Model |
|---|---|---|
| SA-22 | AC/DC 100-250V | PAK-8JS, PAK-11J, 12J, 20J, 21J |
| SA-24 | AC 380-440V | RSK-11J, 12J, 20J, 21J |
| SA-32 | AC/DC 100-250V | PAK-26J, 35J, 50J |
| SA-34 | AC 380-440V | RSK-26J, 35J, 50J |

※PAK-50H～800H and RSK-50H～400H are built-in standard model.

## Mounting method

◇SA-22,24

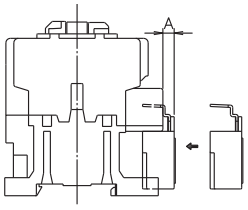


◇SA-32,34

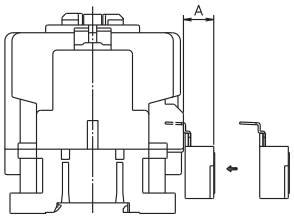


※Dimension of power supply side A, after mounted to the magnetic contactor.(Reference value)

(mm)

| SA-22,24 | SA-32,34 |
|---|---|
| 5 | 19 |

## Dimensions

SA-22,24

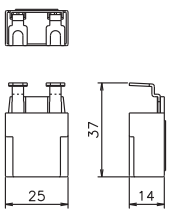


Weight 0.015kg

SA-32,34

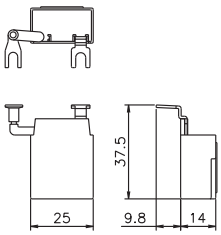


Weight 0.015kg

# Din rail mounting adapters

## Feature

Time required for assembling the boards is reduced remarkably by using DIN Rail Adapter.
One-toutch mounting to 35mm-width DIN Rail.

Material：Steel plate

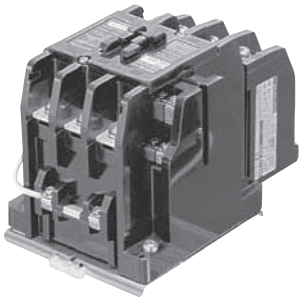



## Application

| | | |
|---|---|---|
| PAK-50H, 65H, 80H, 95H | Steel plate | D-5A |

## Mounting and removal

Push slightly to the arrow direction until you can hear a click

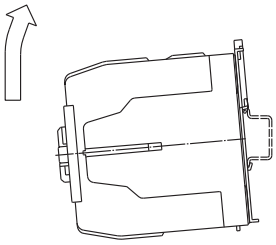

Insert driver tip into adapter's hole and wrench open slightly as illustrated.

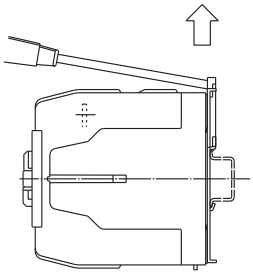

## Dimensions

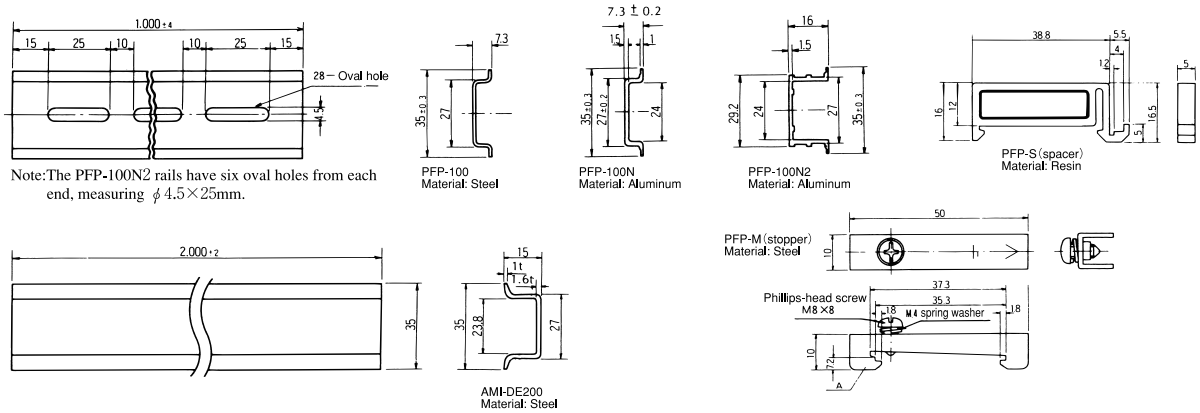

## SPARE COIL

Coil for replacement.

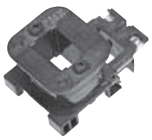

| Used with | Name |
|---|---|
| PAK-8JS, 11J～800J | SPARE COIL |

## MAIN CONTACT SPRING

For replacement from exhausted contacts.

| Used with | Name |
|---|---|
| PAK-11J～800J | MAIN CONTACT SPRING |

## BASE FOR TJ-18N

Individual use adaper form thermal overload relay (TJ-18N)

| Used with | Name |
|---|---|
| TJ-18, TJ-18-3, GTJ-18 | BASE FOR TJ-18N |

## MECHANICAL INTERLOCK UNIT SET

For mechanical interlock.
2 blocks.

| Used with | Name | Used with | Name |
|---|---|---|---|
| RSK-12J | ML-E-R12J | RSK-65H | ML-C-R65H |
| RSK-20J | ML-E-R20J | RSK-80H | ML-C-R80H |
| RSK-21J | ML-E-R21J | RSK-95H | ML-C-R95H |
| RSK-26J | ML-E-R26J | RSK-100H | ML-C-R100H |
| RSK-35J | ML-E-R35J | RSK-125H | ML-C-R125H |
| RSK-50J | ML-E-R50J | RSK-150H | ML-C-R150H |
| RSK-50H | ML-C-R50H | RSK-220H | ML-C-R220H |

↑12J～15J=INTERLOCK+CONNECTING BASE
50H～95H=INTERLOCK+BASE PLATE
100H～220H=INTERLOCK+BASE PLATE+PEDESTAL

## CONNECTING BAR KIT

For reversing contactors.

| Used with | Name |
|---|---|
| RSK-12J (TC) | CONNECTING BAR KIT for RSK-12J (TC) |
| RSK-20J (TC) | CONNECTING BAR KIT for RSK-20J (TC) |
| RSK-21J (TC) | CONNECTING BAR KIT for RSK-21J (TC) |
| RSK-26J (TC), 35J (TC), 50J (T) | CONNECTING BAR KIT for RSK-26J (TC), 35J (TC), 50J (T) |
| RSK-50H (TC) | CONNECTING BAR KIT for RSK-50H (TC) |
| RSK-65H (TC), 80H (TC), 95H (T) | CONNECTING BAR KIT for RSK-65H (TC), 80H (TC), 95H (T) |
| RSK-100H (TC), 125H (TC) | CONNECTING BAR KIT for RSK-100H (TC), 125H (TC) |
| RSK-150H (TC) | CONNECTING BAR KIT for RSK-150H (TC) |
| RSK-220H (TC) | CONNECTING BAR KIT for RSK-220H (TC) |

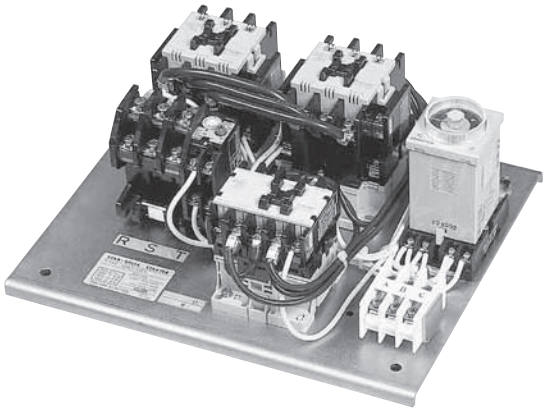



## Model explanation

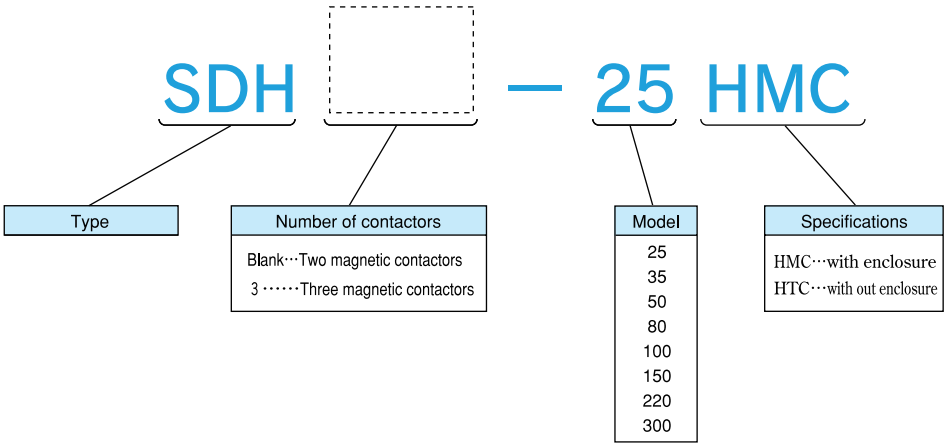

## Starting current characteristics

In star-delta starters, the contactor recloses at the changeover from star operation to delta operation. At this time, a large transient current greater than the direct-online starting current of motor flows for a moment for 2-contactor type and 3-contactor type.

| | SDH | SDH3 |
|---|---|---|
| Magnetic contactor operation chart | 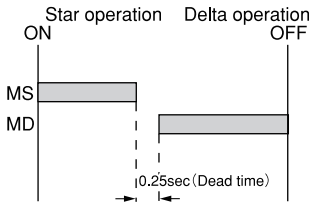 | 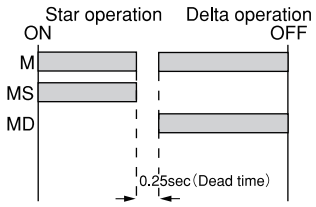 |
| Starting current | 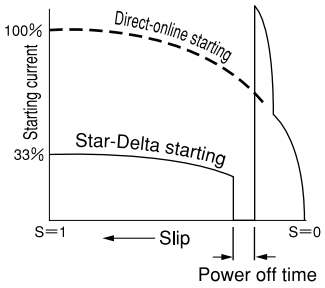 | 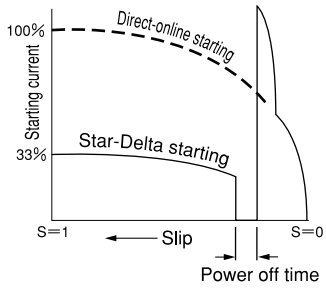 |
| Starting torque | Starting torque is reduced to approximately 1/3 of the values for direct-online starting. | |

## Handling precautions

1. Always turn off the power before adjusting the timer, or erroneous operation may result.
2. Setting the change-over time of timer
   The change-over time can be adjusted with the knob on the front of the timer, between 5 and 60s to match motor starting time. The standard time in which the maximum starting current flows continuously is within 15s.
3. For 2-contactor type starters, the power to the motor remains on even when the motor is not operating. Depending on the operating environment, this may cause motor burnout or electrical shock. For this reason, the use of 3-contactor starters is recommended.
4. The number of operating cycles is three times/hour. If the successively starting is necessary in such as a test operation, it must be within 3 times. After this operations, leave at least one hour.

## Ratings and specifications

＊SDH

| Model | | Rated capacity（kW） | | Contactor used | | Thermal overload relay | Timer used |
|---|---|---|---|---|---|---|---|
| Enclosed type | Open type | 200—220V | 380—440V | M D | M S | O C R | T M |
| SDH— 25HMC | SDH— 25HTC | 5.5 | 5.5 | PAK— 21J | PAK— 12J31 | TJ—35 | H3CR—G8EL |
| SDH— 35HMC | SDH— 35HTC | 7.5 | 11 | PAK— 26J | PAK— 21J | 〃 | 〃 |
| SDH— 50HMC | SDH— 50HTC | 11 | 19 | PAK— 35J | PAK— 26J | 〃 | 〃 |
| SDH— 80HMC | SDH— 80HTC | 19 | 26 | PAK— 50H | PAK— 35J | TJ—50 | 〃 |
| SDH—100HMC | SDH—100HTC | 26 | 37 | PAK— 65H | PAK— 50H | 〃 | 〃 |
| SDH—150HMC | SDH—150HTC | 40 | 55 | PAK—100H | PAK— 65H | TJ—125 | 〃 |
| SDH—220HMC | SDH—220HTC | 55 | 90 | PAK—150H | PAK—100H | 〃 | 〃 |
| SDH—300HMC | SDH—300HTC | 75 | 150 | PAK—220H | PAK—125H | TJ—35C+CT | 〃 |

Notes. ①Refer to P14 for the contrast table of the motor capacity and the rated current of thermal overload relay.

＊SDH3（with power cut-off contactor）

| Model | | Rated capacity（kW） | | Contactor used | | | Thermal overload relay | Timer used |
|---|---|---|---|---|---|---|---|---|
| Enclosed type | Open type | 200—220V | 380—440V | M | M D | M S | O C R | T M |
| SDH3— 25HMC | SDH3— 25HTC | 5.5 | 5.5 | PAK— 21J | | PAK— 21J | TJ—35 | H3CR—G8EL |
| SDH3— 35HMC | SDH3— 35HTC | 7.5 | 11 | PAK— 26J | PAK— 21J | 〃 | 〃 | 〃 |
| SDH3— 50HMC | SDH3— 50HTC | 11 | 19 | PAK— 35J | | 〃 | 〃 | 〃 |
| SDH3— 80HMC | SDH3— 80HTC | 19 | 26 | PAK— 50H | | PAK— 26J | TJ—50 | 〃 |
| SDH3—100HMC | SDH3—100HTC | 26 | 37 | PAK— 65H | | PAK— 35J | 〃 | 〃 |
| SDH3—150HMC | SDH3—150HTC | 40 | 55 | PAK—100H | | PAK— 50H | TJ—125 | 〃 |
| SDH3—220HMC | SDH3—220HTC | 55 | 90 | PAK—150H | | PAK— 65H | 〃 | 〃 |
| SDH3—300HMC | SDH3—300HTC | 75 | 150 | PAK—220H | | PAK—100H | TJ—35C+CT | 〃 |

Notes. ①Refer to P14 for the contrast table of the motor capacity and the rated current of thermal overload relay.

## Operation coil rating

| Nominal coil voltage | Rated coil voltage |
|---|---|
| AC100V | 100V 50Hz<br>100-110V 60Hz |
| AC200V | 200V 50Hz<br>200-220V 60Hz |

Notes. ①Nominal coil voltage is designed to simplify specification in ordering.
Please use nominal coil voltage when ordering.
②Please contact us for 400V coil.

## Standard service conditions

| | |
|---|---|
| Standard ambient temperature | 40℃ |
| Ambient temperature range | 5℃～40℃ |
| Relative humidity | 45%～85%RH |
| Environment | No corrosive or explosive gas,<br>no excessive vibration or shock |
| Mounting position | Mounted vertically |
| Altitude | 2000m max |

## Capacity of the operation transformer

(Capacity must be greater than the values listed below.)

| Type \ Model | SDH— | SDH3— |
|---|---|---|
| 25 | 50VA | 50VA |
| 35 | 50VA | 100VA |
| 50 | 50VA | 100VA |
| 80 | 100VA | 150VA |
| 100 | 100VA | 200VA |
| 150 | 200VA | 400VA |
| 220 | 300VA | 500VA |
| 300 | 300VA | 500VA |

## 2-contactor type star-delta starter SDH-□

### Dimensions and mounting method

①Enclosed type SDH-□HMC (in mm, Weight kg)

| Model | W | H | D | A | B | C | E | F | F' | G | G' | I | J | K | L | Weight |
|---|---|---|---|---|---|---|---|---|---|---|---|---|---|---|---|---|
| SDH— 25HMC | 300 | 300 | 150 | 220 | 240 | 14 | 40 | 45 | 45 | 55 | 55 | 100 | 28 | 28 | 7 | 8.5 |
| SDH— 35HMC | 〃 | 〃 | 〃 | 〃 | 〃 | 〃 | 〃 | 〃 | 〃 | 〃 | 〃 | 〃 | 〃 | 〃 | 〃 | 8.8 |
| SDH— 50HMC | 〃 | 〃 | 〃 | 〃 | 〃 | 〃 | 〃 | 〃 | 〃 | 〃 | 〃 | 〃 | 〃 | 35 | 〃 | 9.1 |
| SDH— 80HMC | 350 | 350 | 165 | 250 | 270 | 〃 | 45 | 〃 | 〃 | 70 | 70 | 120 | 〃 | 43 | 〃 | 10.3 |
| SDH—100HMC | 〃 | 〃 | 〃 | 〃 | 〃 | 〃 | 〃 | 〃 | 〃 | 〃 | 〃 | 〃 | 〃 | 〃 | 〃 | 11.0 |
| SDH—150HMC | 300 | 560 | 220 | 200 | 460 | 〃 | 60 | 20 | 60 | 80 | 60 | 90 | 〃 | 52 | 9.5 | 15.0 |
| SDH—220HMC | 457 | 640 | 226 | 350 | 540 | 15 | 104 | 35 | 80 | 115 | 90 | 150 | 〃 | 78 | 〃 | 22.6 |
| SDH—300HMC | 〃 | 〃 | 〃 | 〃 | 〃 | 〃 | 〃 | 〃 | 〃 | 〃 | 〃 | 〃 | 〃 | 〃 | 〃 | 26.5 |

②Open type SDH-□HTC (in mm, Weight kg)

| Model | W | H | D | A | B | C | E | Weight |
|---|---|---|---|---|---|---|---|---|
| SDH— 25HTC | 240 | 200 | 110 | 200 | 160 | 10 | 7 | 2.8 |
| SDH— 35HTC | 〃 | 〃 | 〃 | 〃 | 〃 | 〃 | 〃 | 3.1 |
| SDH— 50HTC | 〃 | 〃 | 〃 | 〃 | 〃 | 〃 | 〃 | 3.4 |
| SDH— 80HTC | 280 | 235 | 124 | 240 | 195 | 〃 | 〃 | 4.6 |
| SDH—100HTC | 〃 | 〃 | 〃 | 〃 | 〃 | 〃 | 〃 | 5.3 |
| SDH—150HTC | 240 | 360 | 150 | 200 | 320 | 〃 | 9.5 | 8.0 |
| SDH—220HTC | 350 | 400 | 172 | 310 | 360 | 15 | 〃 | 12.6 |
| SDH—300HTC | 〃 | 〃 | 〃 | 〃 | 〃 | 〃 | 〃 | 16.5 |

①Enclosed type

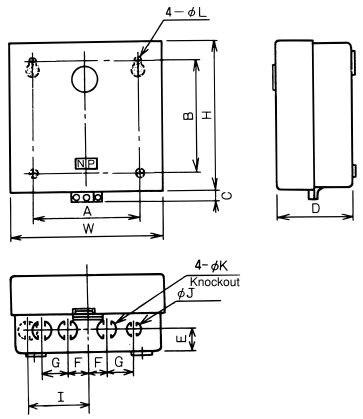


②Open type

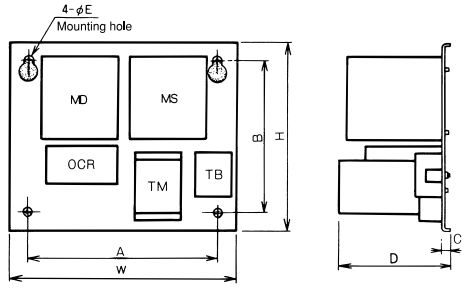


### Connection diagram

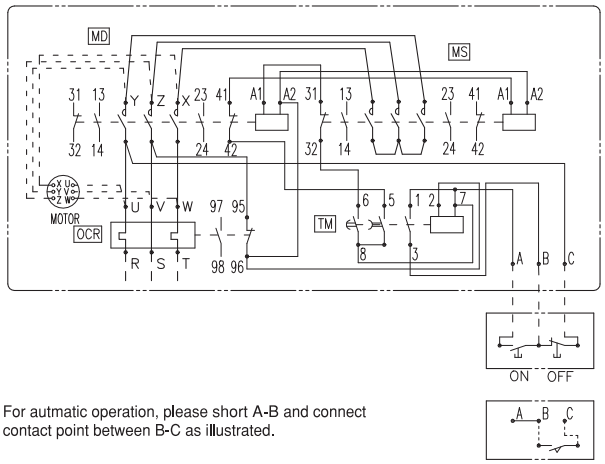


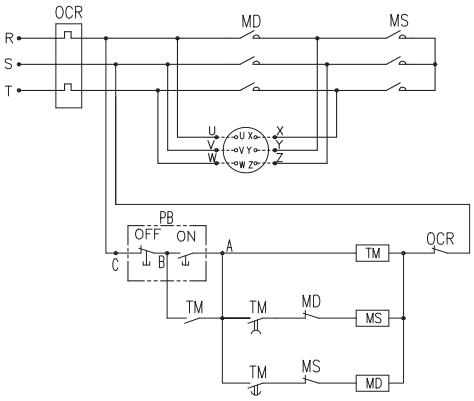


For autmatic operation, please short A-B and connect contact point between B-C as illustrated.




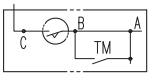


Notes. ①For 25HM and HT models, auxiliary contacts 23-24 and 41-42 of MD contactor and 13-14, 23-24 and 41-42 of MS contactor are not provided with.
②For 35HM and HT models, auxiliary contacts 23-24 and 41-42 of MS contactor are not provided with.

## 3-contactor type star-delta starter SDH3-□

### Dimensions and mounting method

①Enclosed type SDH3-□HMC (in mm, Weight kg)

| Model | W | H | D | A | B | C | E | F | G | I | J | K | L | Weight |
|---|---|---|---|---|---|---|---|---|---|---|---|---|---|---|
| SDH3— 25HMC | 300 | 300 | 150 | 220 | 240 | 14 | 40 | 45 | 55 | 100 | 28 | 28 | 7 | 9.1 |
| SDH3— 35HMC | 350 | 350 | 165 | 250 | 270 | 〃 | 45 | 〃 | 70 | 120 | 〃 | 〃 | 〃 | 9.9 |
| SDH3— 50HMC | 〃 | 〃 | 〃 | 〃 | 〃 | 〃 | 〃 | 〃 | 〃 | 〃 | 〃 | 35 | 〃 | 10.1 |
| SDH3— 80HMC | 400 | 400 | 180 | 300 | 320 | 〃 | 50 | 50 | 80 | 〃 | 〃 | 43 | 〃 | 16.1 |
| SDH3—100HMC | 〃 | 〃 | 〃 | 〃 | 〃 | 〃 | 〃 | 〃 | 〃 | 〃 | 〃 | 〃 | 〃 | 16.4 |
| SDH3—150HMC | 480 | 480 | 200 | 360 | 380 | 〃 | 55 | 55 | 100 | 150 | 〃 | 52 | 9.5 | 22.0 |
| SDH3—220HMC | 560 | 560 | 220 | 440 | 460 | 〃 | 60 | 70 | 120 | 190 | 〃 | 78 | 〃 | 27.1 |
| SDH3—300HMC | 〃 | 〃 | 〃 | 〃 | 〃 | 〃 | 〃 | 〃 | 〃 | 〃 | 〃 | 〃 | 〃 | 36.2 |

②Open type SDH3-□HTC (in mm, Weight kg)

| Model | W | H | D | A | B | C | E | Weight |
|---|---|---|---|---|---|---|---|---|
| SDH3— 25HTC | 240 | 200 | 110 | 200 | 160 | 10 | 7 | 3.4 |
| SDH3— 35HTC | 280 | 235 | 〃 | 240 | 195 | 〃 | 〃 | 4.2 |
| SDH3— 50HTC | 〃 | 〃 | 〃 | 〃 | 〃 | 〃 | 〃 | 4.4 |
| SDH3— 80HTC | 320 | 280 | 124 | 280 | 240 | 〃 | 〃 | 6.7 |
| SDH3—100HTC | 〃 | 〃 | 〃 | 〃 | 〃 | 〃 | 〃 | 7.0 |
| SDH3—150HTC | 360 | 320 | 150 | 310 | 270 | 〃 | 9.5 | 12.0 |
| SDH3—220HTC | 450 | 410 | 172 | 400 | 360 | 15 | 〃 | 17.0 |
| SDH3—300HTC | 〃 | 〃 | 〃 | 〃 | 〃 | 〃 | 〃 | 26.1 |

①Enclosed type

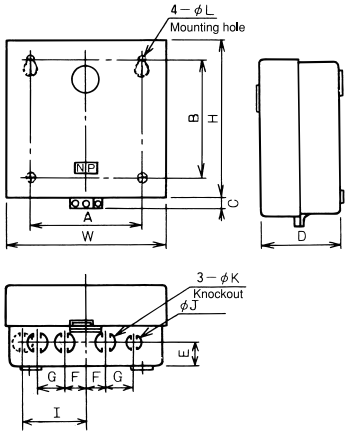


②Open type

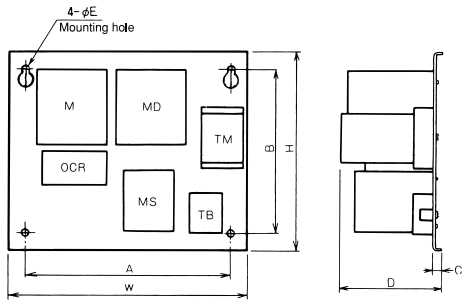


### Connection diagram

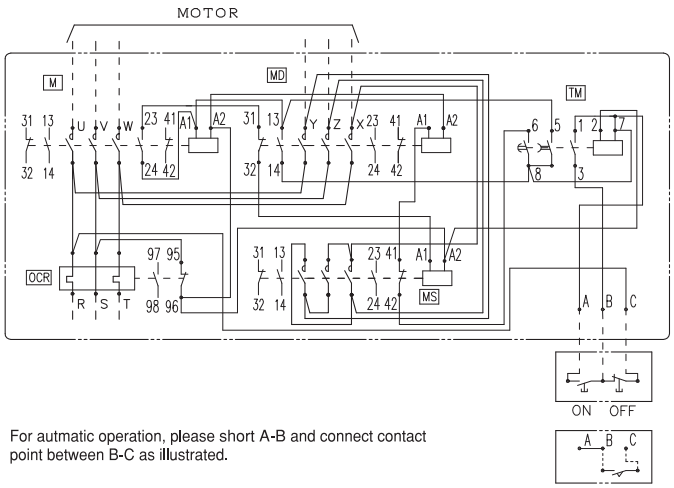


For autmatic operation, please short A-B and connect contact point between B-C as illustrated.

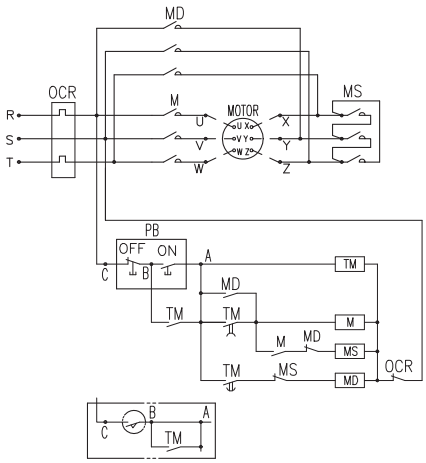


Notes. ①For 25HM and HT models, auxiliary contacts 23-24 and 41-42 are not provided with.
②For 35HM and HT models, auxiliary contacts 23-24 and 41-42 of MD and MS contactors are not provided with.
③For 50HM and HT models, auxiliary contacts 23-24 and 41-42 of MS contactor are not provided with.

## Conforming wire size and terminal tightening torque

Power supply side terminals（R.S.T）Load side terminals（U.V.W, Y.Z.X）of SDH

| Model | | Screw size | | Conforming wire | | Applicable crimp-type terminal | | Tightening torque N·m(kgf·cm) | |
|---|---|---|---|---|---|---|---|---|---|
| | | Main circuit | Control circuit | Main circuit | Control circuit | Main circuit | Control circuit | Main circuit | Control circuit |
| SDH− 25 | Power supply Load(UVW) | M5 | M4 | φ1.6～3.2 1.25～14㎟ | φ1～2 0.5～3.5㎟ | 1.25−5～14−5 | 1.25−4 ～ 2−4 | 2.4～3.5（24～36） | 1.2～1.8（12～18） |
| | Load(YZX) | M4 | | φ1～2 0.5～5.5㎟ | | 1.25−4～5.5−4 | | 1.2～1.8（12～18） | |
| SDH− 35 | Power supply Load | M5 | | φ1.6～3.2 1.25～14㎟ | | 1.25−5～14−5 | | 2.4～3.5（24～36） | |
| SDH− 50 | Power supply Load | M5 | | φ1.6～3.2 1.25～14㎟ | | 1.25−5～14−5 | | 2.4～3.5（24～36） | |
| SDH− 80 | Power supply Load | M6 | | 2～38㎟ | | 2−6～38−6S ① | | 3.9～5.9（40～60） | |
| SDH−100 | Power supply Load | M6 | | 2～38㎟ | | 2−6～38−6S ① | | 3.9～5.9（40～60） | |
| SDH−150 | Power supply Load | M8 | | 2～80㎟ | | 2−8～CB80−8 ② | | 9.0～13.5（92～138） | |
| SDH−220 | Power supply | M10 | | 2～150㎟ | | 2−10～150−10 | | 18.1～27（185～275） | |
| | Load | M8 | | 2～100㎟ | | 2−8～CB100−8 ② | | 9.0～13.5（92～138） | |
| SDH−300 | Power supply Load | M10 | | 2～150㎟ | | 2−10～150−10 | | 18.1～27（185～275） | |

5

Power supply side terminals（R.S.T）Load side terminals（U.V.W, Y.Z.X）of SDH3

| Model | | Screw size | | Conforming wire | | Applicable crimp-type terminal | | Tightening torque N·m(kgf·cm) | |
|---|---|---|---|---|---|---|---|---|---|
| | | Main circuit | Control circuit | Main circuit | Control circuit | Main circuit | Control circuit | Main circuit | Control circuit |
| SDH3− 25 | Power supply | M5 | M4 | φ1.6～3.2 1.25～14㎟ | φ1～2 0.5～3.5㎟ | 1.25−5～14−5 | 1.25−4 ～ 2−4 | 2.4～3.5（24～36） | 1.2～1.8（12～18） |
| | Load | M4 | | φ1～2 0.5～5.5㎟ | | 1.25−4～5.5−4 | | 1.2～1.8（12～18） | |
| SDH3− 35 | Power supply Load(UVW) | M5 | | φ1.6～3.2 1.25～14㎟ | | 1.25−5～14−5 | | 2.4～3.5（24～36） | |
| | Load(YZX) | M4 | | φ1～2 0.5～5.5㎟ | | 1.25−4～5.5−4 | | 1.2～1.8（12～18） | |
| SDH3− 50 | Power supply Load | M5 | | φ1.6～3.2 1.25～14㎟ | | 1.25−5～14−5 | | 2.4～3.5（24～36） | |
| SDH3− 80 | Power supply Load | M6 | | 2～38㎟ | | 2−6～38−6S ① | | 3.9～5.9（40～60） | |
| SDH3−100 | Power supply Load | M6 | | 2～38㎟ | | 2−6～38−6S ① | | 3.9～5.9（40～60） | |
| SDH3−150 | Power supply Load | M8 | | 2～80㎟ | | 2−8～CB80−8 ② | | 9.0～13.5（92～138） | |
| SDH3−220 | Power supply | M10 | | 2～150㎟ | | 2−10～150−10 | | 18.1～27（185～275） | |
| | Load | M8 | | 2～100㎟ | | 2−8～CB100−8 ② | | 9.0～13.5（92～138） | |
| SDH3−300 | Power supply Load | M10 | | 2～150㎟ | | 2−10～150−10 | | 18.1～27（185～275） | |

① : Standard 38-6 crimp-type terminal lug is too wide, and not suitable for the terminal. Please use 38-6S (Nichifu Terminal Industries Co., Ltd.) or 38-S6 (Japan Solderless Terminal Mfg. Co., Ltd.).

② : Standard 80-8, 100-8 and crimp-type terminal lugs are too wide, and not suitable for the terminal. Please use CB-type terminal connectors for low-voltage switching devices (Nichifu Terminal Industries Co., Ltd.) or for molded case circuit breakers (Japan Solderless Terminal Mfg. Co., Ltd.)

# MEMO

| Series | | | J Serise | | | | | | | | | | | | |
|---|---|---|---|---|---|---|---|---|---|---|---|---|---|---|---|
| Model type | Magnetic contactor | | CLK-25JF2 | CLK-15JFC | CLK-25J2 | CLK-15JC | CLK-25J3 | CLK-20J | CLK-26J | CLK-28J | CLK-35J3 | CLK-35J | CLK-40J | CLK-50J | CLK-65J |
| | Magnetic Starter | With 2-heaters thermal overload relay | – | | | CLK-15JTC | CLK-25J3T | CLK-20JTC | CLK-26JTC | CLK-28JT | CLK-35J3T | CLK-35JTC | CLK-40JT | CLK-50JTC | CLK-65JT |
| | | With phase-failure protection thermal overload relay | – | | | CLK-15JGTC | CLK-25J3GT | CLK-20JGTC | CLK-26JGTC | CLK-28JGT | CLK-35J3GT | CLK-35JGTC | CLK-40JGT | CLK-50JGTC | CLK-65JGT |
| | | With 3-heaters thermal overload relay | – | | | CLK-15JT-3C | CLK-25J3T-3 | CLK-20JT-3C | CLK-26JT-3C | CLK-28JT-3 | CLK-35J3T-3 | CLK-35JT-3C | CLK-40JT-3 | CLK-50JT-3C | CLK-65JT-3 |
| Rated insulation voltage | | | AC600V | | | | | | | | AC630V | AC600V | | | |
| Rated operational voltage | | | AC440V | | | | | | | | AC440V | AC440V | | | |
| Main contacts | | | 2P | 3P | 2P | 3P | 3P | 3P | 3P | 3P | 3P | 3P | 3P | 3P | 3P |
| Auxiliary contacts | | | – | 1NO (1NC) | – | 1NO (1NC) | – | 1NO1NC(2NO,2NC) | | | – | 1NO1NC (2NO2NC) | | 2NO2NC | 2NO2NC |
| Terminal specification | | | Tab | Tab | Screw | Screw | Screw | Screw | Screw | Screw | Screw | Screw | Screw | Screw | Screw |
| Main circuit | Rated thermal current | | 30A | 24A | 30A | 20A | 30A | 26A | 30A | 30A | 45A | 45A | 45A | 60A | 65A |
| | AC-3: 3-Phase Squirrel-cage motor | 200-240V① | – | 3kW/15A | – | 3kW/15A | 5.5kW/26A | 4kW/20A | 5.5kW/26A | 7.5kW/28A | 7.5kW/35A | 7.5kW/35A | 7.5kW/40A | 11kW/50A | 15kW/65A |
| | | 380-440V | – | 4.5kW/10A | – | 4.5kW/10A | 7.5kW/18A | 5.5kW/13A | 7.5kW/18A | 11kW/23A | 11kW/26A | 11kW/26A | 15kW/32A | 19kW/40A | 30kW/65A |
| | AC-3: Single-phase motor | 100-110V | 1.2kW/25A | 0.65kW/15A | 1.5kW/30A | 0.65kW/15A | 1.2kW/26A | 0.9kW/20A | 1.2kW/26A | 1.2kW/28A | 1.6kW/35A | 1.6kW/35A | 40A | 2.3kW/50A | – |
| | | 200-240V① | 2.4kW/25A | 1.3kW/15A | 2.4kW/26A | 1.3kW/15A | 2.4kW/26A | 1.8kW/20A | 2.4kW/26A | 3.3kW/28A | 3.3kW/35A | 3.3kW/35A | 40A | 4.7kW/50A | – |
| | AC-1: Resistance load | 200-240V① | 30 | 24 | 30 | 20 | 30 | 26 | 30 | 30 | 45 | 45 | 45 | 60 | 65 |
| | | 380-440V | 21 | 18 | 30 | 18 | 20 | 20 | 28 | 28 | 38 | 38 | 38 | 60 | 65 |
| Auxiliary circuit | Rated thermal current | | – | 10A | – | 10A | – | 10A | 10A | 10A | – | 10A | 10A | 10A | 10A |
| | Rated operation current AC15 | 24V | – | – | – | – | – | – | – | 10A | – | – | – | – | 10A |
| | | 100-110V | – | 10A | – | 10A | – | 10A | 10A | 10A | – | 10A | 10A | 10A | 10A |
| | | 200-240V① | – | 6A | – | 6A | – | 5A | 5A | 5A | – | 5A | 5A | 5A | 6A |
| | | 380-440V | – | 3A | – | 3A | – | 3A | 3A | 3A | – | 3A | 3A | 3A | 3A |
| | Min. operating reted | | – | 48V 100mA | – | 48V 100mA | – | 48V 100mA | 48V 100mA | 48V 100mA | – | 48V 100mA | 48V 100mA | 48V 100mA | 24V 100mA |
| Performance | IEC 60947-4-1 | | AC-3 | | | | | | | | | | | | |
| | Mechanical Life | | $100\times10^4$ops | | | | | | | | | | | | |
| | Electrical Life | | $25\times10^4$ops | | | | | | | | | | | | |
| | Switching frq. | | 600(ops/hour) | | | | | | | | | | | | |
| Thermal overload relay ② | Standard trip model | Combination Type | – | | | TJ-18JA<br>GTJ-18JA<br>TJ-18JA-3 | TJ-18<br>GTJ-18<br>TJ-18-3 | | | | TJ-35<br>GTJ-35<br>TJ-35-3 | | | | |
| | | Rated current (A) (3-point set current scale) | – | | | 0.28-**0.35**-0.42<br>0.4-**0.5**-0.6<br>0.56-**0.7**-0.84<br>0.64-**0.8**-0.96<br>0.8-**1**-1.2<br>1-**1.2**-1.4<br>1.2-**1.4**-1.6<br>1.4-**1.8**-2.2<br>1.8-**2.3**-2.8<br>2.4-**3**-3.6<br>2.9-**3.6**-4.3<br>3.7-**4.6**-5.5<br>4-**5**-6<br>5.4-**6.7**-8<br>6-**7.5**-9<br>7.4-**9.2**-11<br>8.8-**11**-13<br>11-**13**-15<br>12-**15**-18 | 0.28-**0.35**-0.42<br>0.4-**0.5**-0.6<br>0.56-**0.7**-0.84<br>0.64-**0.8**-0.96<br>0.8-**1**-1.2<br>1-**1.2**-1.4<br>1.2-**1.4**-1.6<br>1.4-**1.8**-2.2<br>1.8-**2.3**-2.8<br>2.4-**3**-3.6<br>2.9-**3.6**-4.3<br>3.7-**4.6**-5.5<br>4-**5**-6<br>5.4-**6.7**-8<br>6-**7.5**-9<br>7.4-**9.2**-11<br>8.8-**11**-13<br>11-**13**-15<br>12-**15**-18<br>15-**18**-20<br>18-**22**-26<br>22-**26** | 0.28-**0.35**-0.42<br>0.4-**0.5**-0.6<br>0.56-**0.7**-0.84<br>0.64-**0.8**-0.96<br>0.8-**1**-1.2<br>1-**1.2**-1.4<br>1.2-**1.4**-1.6<br>1.4-**1.8**-2.2<br>1.8-**2.3**-2.8<br>2.4-**3**-3.6<br>2.9-**3.6**-4.3<br>3.7-**4.6**-5.5<br>4-**5**-6<br>5.4-**6.7**-8<br>6-**7.5**-9<br>7.4-**9.2**-11<br>8.8-**11**-13<br>11-**13**-15<br>12-**15**-18<br>15-**18**-20 | 0.28-**0.35**-0.42<br>0.4-**0.5**-0.6<br>0.56-**0.7**-0.84<br>0.64-**0.8**-0.96<br>0.8-**1**-1.2<br>1-**1.2**-1.4<br>1.2-**1.4**-1.6<br>1.4-**1.8**-2.2<br>1.8-**2.3**-2.8<br>2.4-**3**-3.6<br>2.9-**3.6**-4.3<br>3.7-**4.6**-5.5<br>4-**5**-6<br>5.4-**6.7**-8<br>6-**7.5**-9<br>7.4-**9.2**-11<br>8.8-**11**-13<br>11-**13**-15<br>12-**15**-18<br>15-**18**-20<br>18-**22**-26<br>22-**26** | 7.4-**9.2**-11<br>8.8-**11**-13<br>11-**13**-15<br>12-**15**-18<br>15-**18**-20<br>18-**22**-26<br>21-**26**-31<br>24-**30**-36<br>28-**34**-42 | | | 7.4-**9.2**-11<br>8.8-**11**-13<br>11-**13**-15<br>12-**15**-18<br>15-**18**-20<br>18-**22**-26<br>21-**26**-31<br>24-**30**-36<br>28-**34**-42<br>34-**42**-48<br>40-**48**-52 | 7.4-**9.2**-11<br>8.8-**11**-13<br>11-**13**-15<br>12-**15**-18<br>15-**18**-20<br>18-**22**-26<br>21-**26**-31<br>24-**30**-36<br>28-**34**-42<br>34-**42**-48<br>40-**48**-52<br>46-**56**-65 |
| | Fast-trip model | Combination Type | – | | | TJ-18JA-F<br>GTJ-18JA-F<br>TJ-18JA-3F | TJ-18-F<br>GTJ-18-F<br>TJ-18-3F | | | | TJ-35-F<br>GTJ-35-F<br>TJ-35-3F | | | | |
| | | Rated current (A) (1-point set current fixed) ③ | – | | | 3,4,5,6,6.7,8,9.2 11,13,15 | 3,4,5,6,6.7,8,9.2 11,13,15,18,24,26 | 3,4,5,6,6.7,8,9.2 11,13,15,18 | 3,4,5,6,6.7,8,9.2 11,13,15,18,24,26 | | 5,6,7.5,11,13,16,22,30,36 | | | 5,6,7.5,11,13,16,22,30,36,44,50 | 5,6,7.5,11,13,16,22,30,36,44,50,65 |

Notes. ① The rating operational voltage range of the 200V class of CLK-65H~250H is 200-220V.
② Capacity of thermal overload relates used in magnetic contactors should not be greater than the rated operating current of the 3P motor.
③ We can produce thermal overload relay of phase-failure protection more than 8A.

| H Series | | | | | | |
|---|---|---|---|---|---|---|
| CLK-65H | CLK-80H | CLK-100H | CLK-125H | CLK-150H | CLK-200H | CLK-250H |
| CLK-65HTC | CLK-80HTC | CLK-100HTC | CLK-125HTC | CLK-150HTC | CLK-200HTC | CLK-250HTC |
| CLK-65HGTC | CLK-80HGTC | CLK-100HGTC | CLK-125HGTC | CLK-150HGTC | CLK-200HGTC | CLK-250HGTC |
| CLK-65HT-3C | CLK-80HT-3C | CLK-100HT-3C | CLK-125HT-3C | CLK-150HT-3C | CLK-200HT-3C | CLK-250HT-3C |
| AC600V | | | | | | |
| AC440V | | | | | | |
| 3P | 3P | 3P | 3P | 3P | 3P | 3P |
| 2NO2NC | 2NO2NC | 2NO2NC | 2NO2NC | 2NO2NC | 2NO2NC | 2NO2NC |
| Screw | Screw | Screw | Screw | Screw | Screw | Screw |
| 75A | 90A | 110A | 150A | 170A | 220A | 260A |
| 15kW/65A | 19kW/80A | 22kW/100A | 30kW/125A | 37kW/150A | 50kW/200A | 68kW/250A |
| 30kW/65A | 37kW/75A | 40kW/80A | 55kW/110A | 60kW/125A | 80kW/160A | 90kW/180A |
| – | – | – | – | – | – | – |
| – | – | – | – | – | – | – |
| 75 | 90 | 110 | 150 | 170 | 220 | 260 |
| 75 | 90 | 110 | 150 | 170 | 220 | 260 |
| 10A | 10A | 10A | 10A | 10A | 10A | 10A |
| – | – | – | – | – | – | – |
| 10A | 10A | 10A | 10A | 10A | 10A | 10A |
| 6A | 6A | 6A | 6A | 6A | 6A | 6A |
| 3A | 3A | 3A | 3A | 3A | 3A | 3A |
| 48V 100mA | 48V 100mA | 48V 100mA | 48V 100mA | 48V 100mA | 24V 10mA | 24V 10mA |
| AC-3 | | | | | | |
| $100\times10^4$ops | | | | | | |
| $25\times10^4$ops | | | | | | |
| 600(ops/hour) | | | | | | |
| TJ-50<br>GTJ-50<br>TJ-50-3 | | | TJ-125<br>GTJ-125<br>TJ-125-3 | | | TJ-220<br>GTJ-220<br>TJ-220-3 |
| 12 – **15** – 18<br>18 – **22** – 26<br>21 – **26** – 31<br>24 – **30** – 36<br>28 – **34** – 42<br>34 – **42** – 48<br>40 – **48** – 58<br>46 – **56** – 64<br>56 – **68** – 80 | 12 – **15** – 18<br>18 – **22** – 26<br>21 – **26** – 31<br>24 – **30** – 36<br>28 – **34** – 42<br>34 – **42** – 48<br>40 – **48** – 58<br>46 – **56** – 64<br>56 – **68** – 80<br>68 – **80** – 94 | 12 – **15** – 18<br>18 – **22** – 26<br>21 – **26** – 31<br>24 – **30** – 36<br>28 – **34** – 42<br>34 – **42** – 48<br>40 – **48** – 58<br>46 – **56** – 64<br>56 – **68** – 80<br>68 – **80** – 94<br>76 – **90** – 100 | 34 – **42** – 48<br>40 – **48** – 58<br>46 – **56** – 64<br>56 – **68** – 80<br>68 – **80** – 94<br>76 – **90** – 100<br>85 – **105** – 125<br>110 – **130** – 150 | 34 – **42** – 48<br>40 – **48** – 58<br>46 – **56** – 64<br>56 – **68** – 80<br>68 – **80** – 94<br>76 – **90** – 100<br>85 – **105** – 125<br>110 – **130** – 150<br>130 – **160** – 190 | 34 – **42** – 48<br>40 – **48** – 58<br>46 – **56** – 64<br>56 – **68** – 80<br>68 – **80** – 94<br>76 – **90** – 100<br>85 – **105** – 125<br>110 – **130** – 150<br>130 – **160** – 190<br>170 – **200** – 230 | 65 – **80** – 95<br>85 – **105** – 125<br>105 – **130** – 150<br>130 – **160** – 190<br>150 – **190** – 230<br>185 – **230** – 275 |
| TJ-50-F<br>GTJ-50-F<br>TJ-50-3F | | | TJ-125-F<br>GTJ-125-F<br>TJ-125-3F | | | – |
| 23,30,35,42,<br>54,62 | 23,30,35,42,<br>54,62,74 | 23,30,35,42,<br>54,62,74,90 | 65,80,95 | 65,80,95,140 | 65,80,95,140 | – |

## Manufactured models

| Series name | | CLK-J Series | | | | | | | | | | | | | CLK-H Series | | | | | | |
|---|---|---|---|---|---|---|---|---|---|---|---|---|---|---|---|---|---|---|---|---|---|
| Frame | | 25JF2 | 15JFC | 15JC | 25J2 | 25J3 | 20J | 26J | 28J | 35J3 | 35J | 40J | 50J | 65J | 65H | 80H | 100H | 125H | 150H | 200H | 250H |
| Terminal specification | | Tab | | Screw | | | | | | | | | | | | | | | | | |
| Contact configuration | Main | 2P | 3P | 3P | 2P | 3P | 3P | 3P | 3P | 3P | 3P | 3P | 3P | 3P | 3P | 3P | 3P | 3P | 3P | 3P | 3P |
| | Aux. | — | 1NO (1NC) | | — | — | 1NO1NC (2NO,2NC) | | | — | 1NO1NC (2NO2NC) | | 2NO2NC | | | | | | | | |
| Magnetic contactors | AC-operated model | ○ | ○ | ○ | ○ | ○ | ○ | ○ | ○ | ○ | ○ | ○ | ○ | ○ | ○ | ○ | ○ | ○ | ○ | ○ | ○ |
| Magnetic contactors | DC-operated model | — | ○ | ○ | — | — | — | — | — | — | — | — | — | — | — | — | — | — | — | — | — |
| Magnetic starters | AC-operated model | — | — | ○ | — | ○ | ○ | ○ | ○ | ○ | ○ | ○ | ○ | ○ | ○ | ○ | ○ | ○ | ○ | ○ | ○ |
| Magnetic starters | DC-operated model | — | — | — | — | — | — | — | — | — | — | — | — | — | — | — | — | — | — | — | — |
| Magnetic starters – Standard trip model | With 2-heaters thermal CLK-□T(C) | — | — | ○ | — | ○ | ○ | ○ | ○ | ○ | ○ | ○ | ○ | ○ | ○ | ○ | ○ | ○ | ○ | ○ | ○ |
| Magnetic starters – Standard trip model | With phase-failure protection thermal CLK-□GT(C) | — | — | ○ | — | ○ | ○ | ○ | ○ | ○ | ○ | ○ | ○ | ○ | ○ | ○ | ○ | ○ | ○ | ○ | ○ |
| Magnetic starters – Standard trip model | With 3-heaters thermal CLK-□T-3(C) | — | — | ○ | — | ○ | ○ | ○ | ○ | ○ | ○ | ○ | ○ | ○ | ○ | ○ | ○ | ○ | ○ | ○ | ○ |
| Magnetic starters – Fast-trip model | With 2-heaters thermal CLK-□T-F(C) | — | — | ○ | — | ○ | ○ | ○ | ○ | ○ | ○ | ○ | ○ | ○ | ○ | ○ | ○ | ○ | ○ | ○ | ○ |
| Magnetic starters – Fast-trip model | With phase-failure protection thermal CLK-□GT-F(C) | — | — | ○ | — | ○ | ○ | ○ | ○ | ○ | ○ | ○ | ○ | ○ | ○ | ○ | ○ | ○ | ○ | ○ | ○ |
| Magnetic starters – Fast-trip model | With 3-heaters thermal CLK-□T-3F(C) | — | — | ○ | — | ○ | ○ | ○ | ○ | ○ | ○ | ○ | ○ | ○ | ○ | ○ | ○ | ○ | ○ | ○ | ○ |

Notes. ① ○ : Manufactures
② — : Non manufactures

## Model explanation

**CLK — 15J DC T 40 — 3 C**

- **Type**: CLK
- **Frame and Terminal spec**
  - Tab: 25JF2, 15JF
  - Screw: 15J, 20J, 25J2, 25J3, 26J, 28J, 35J3, 35J, 40J, 50J, 65J; 65H, 80H, 100H, 125H, 150H, 200H, 250H
- **Coil specification**
  - Blank…AC Operated model
  - DC……DC Operated model
- **Specification of starter**
  - Blank …… Contactor
  - T…… Starter
  - GT …… Starter With phase-failure protection thermal
- **Aux.contact Configuration**
  - 15JF, 15J
    - 40C……4NO
    - 31C……3NO1NC
  - 20J, 26J, 28J
    - Blank…1NO1NC
    - 20 …… 2NO
    - 02 …… 2NC
  - 35J, 40J
    - Blank…1NO1NC
    - 22 …… 2NO2NC
  - 50J～250H
    - Blank…2NO2NC
- **Options**
  - 3… Thermal overload relay with 3 heaters
  - F… With fast-trip thermal overlord relay
- **Career mark**
  - Only for magnetic starters. However, except for 25J3T, 35J3T, 28JT, 40JT, 65JT models.

Note. ① CLK-15JF, 15J accompanies "C" at the end of model name.

## Operation coil ratings

| Coil name ① | Rated voltage of coil ② | Model<br>25JF,15JFC,15JC<br>20J～65J<br>65H～250H | Color of coil nameplate |
|---|---|---|---|
| AC100V (Standard) | 100V 50Hz<br>100-110V 60Hz | ○ | Blue |
| AC200V (Standard) | 200V 50Hz<br>200-220V 60Hz | ○ | Yellow |
| AC 24V | 24V 50Hz<br>24V 60Hz | ○ | Green |
| AC110V | 105-110V 50Hz<br>110-120V 60Hz | ○ | White |
| AC120V | 110-120V 50Hz<br>120-130V 60Hz | ○ | White |
| AC220V | 208-220V 50Hz<br>220-240V 60Hz | ○ | White |
| AC240V | 220-240V 50Hz<br>240-260V 60Hz | ○ | White |
| AC400V | 380-400V 50Hz<br>400-440V 60Hz | ○ | Pink |
| DC 12V | DC 12V ③ | ○ | White |
| DC 24V | DC 24V ③ | ○ | White |
| DC100V | DC100V ③ | ○ | White |
| DC200V | DC200V ③ | ○ | White |
| Coil terminal symbol | | A1 A2 | |

Notes. ① Coil name voltage is designed to simplify specification in ordering please use coil name when ordering
② Rated voltage of coil indicates the rated operating frequency marked on the coil.
③ DC coil is available for CLK-15JFC, 15JC, 25JF2, 25J2 and 25J3 only.

## Application of thermal overload relay for motors

| Motor output Capacity (kW) | 220V 3-phase motor (4-pole) | | | 440V 3-phase motor (4-pole) | | |
|---|---|---|---|---|---|---|
| | Magnetic Contactor | Thermal overload relay | | Magnetic Contactor | Thermal overload relay | |
| | | Model | Rated current (A) | | Model | Rated current (A) |
| 0.1 | 15JC | TJ-18JA<br>TJ-18JA-3<br>GTJ-18JA | 0.7 | 15JC | TJ-18JA<br>TJ-18JA-3<br>GTJ-18JA | 0.35 |
| 0.2 | | | 1.2 | | | 0.7 |
| 0.4 | | | 2.3 | | | 1.2 |
| 0.75 | | | 3.6 | | | 1.8 |
| 1.1 | | | 5 | | | 2.3 |
| 1.5 | | | 6.7 | | | 3.6 |
| 2.2 | | | 9.2 | | | 4.6 |
| 2.5 | | | 11 | | | 5 |
| 2.7 | | | 11 | | | 5 |
| 3.7 | 20J | TJ-18<br>TJ-18-3<br>GTJ-18 | 15 | | | 7.5 |
| 4 | | | 18 | | | 7.5 |
| 5.5 | 25J3<br>26J<br>28J | | 22 | 20J | TJ-18<br>TJ-18-3<br>GTJ-18 | 11 |
| 7.5 | 35J3<br>35J<br>40J | TJ-35<br>TJ-35-3<br>GTJ-35 | 30 | 25J3<br>26J<br>28J | | 15 |
| 11 | 50J | | 42 | 35J3<br>35J<br>40J | TJ-35<br>TJ-35-3<br>GTJ-35 | 22 |
| 15 | 65J | | 56 | 50J | | 30 |
| | 65H | TJ-50<br>TJ-50-3<br>GTJ-50 | | | | |
| 19 | 80H | | 68 | | | 34 |
| 22 | 100H | | 80 | 65J | | 42 |
| | | | | 65H | TJ-50<br>TJ-50-3<br>GTJ-50 | 42 |
| 30 | 125H | TJ-125<br>TJ-125-3<br>GTJ-125 | 105 | 65J | TJ-35<br>TJ-35-3<br>GTJ-35 | 56 |
| | | | | 65H | TJ-50<br>TJ-50-3<br>GTJ-50 | 56 |
| 37 | 150H | | 130 | 80H | | 68 |
| 40 | 200H | | 130 | 100H | | 68 |
| 45 | | | 160 | 125H | TJ-125<br>TJ-125-3<br>GTJ-125 | 80 |
| 55 | 250H | TJ-220<br>TJ-220-3<br>GTJ-220 | 190 | | | 105 |
| 75 | | | 240 | 200H | | 130 |
| 90 | – | – | – | 250H | TJ-220<br>TJ-220-3<br>GTJ-220 | 160 |

Notes. ① Load current will be different for 3-phase motors with other than four poles,and for non-standard motors. Selected the rated current appropriate for each motor in this case.
② If the same rated current is not available,select the closest current and use the adjusting dial to match it to the rated motor current.

## Characteristic of the operation electromagnetic

| Item / Model | Operation coil ratings | | Operating voltage(V) | | Electromagnetic capacity(VA) | | Loss(W) | Operating of main contacts(ms) | |
|---|---|---|---|---|---|---|---|---|---|
| | Voltage | Frequency | Minimum (less or aqual) | Open (less or aqual) | Inrush (max) | Sealed (max) | Sealed | Closing | Opening |
| CLK-25JF2 | 200V | 50Hz | 154 | 120 | 22 | 6.4 | 2.1～3.5 | 6～20 | 4～33 |
| | 200-220V | 60Hz | 154 | 120 | 24 | 6.9 | 2.3～3.7 | 7～23 | 4～33 |
| CLK-15JFC<br>CLK-15JC<br>CLK-25J2<br>CLK-25J3 | 200V | 50Hz | 154 | 120 | 22 | 6.4 | 2.1～3.5 | 6～20 | 4～33 |
| | 200-220V | 60Hz | 154 | 120 | 24 | 6.9 | 2.3～3.7 | 7～23 | 4～33 |
| | DC200V | – | 132 | 130 | 46 | 4.6 | 2.8～4.6 | 14～27 | 4～33 |
| CLK-20J<br>CLK-26J<br>CLK-28J | 200V | 50Hz | 144 | 120 | 43 | 9.8 | 2.0～3.7 | 6～22 | 4～33 |
| | 200-220V | 60Hz | 150 | 120 | 48 | 9.0 | 1.8～3.3 | 8～25 | 4～33 |
| CLK-35J3 | 200V | 50Hz | 170 | 150 | 50 | 8.8 | 1.8～3.0 | 6～22 | 4～33 |
| | 200-220V | 60Hz | 170 | 150 | 56 | 8.0 | 1.3～2.9 | 8～27 | 4～33 |
| CLK-35J<br>CLK-40J<br>CLK-50J | 200V | 50Hz | 144 | 120 | 92 | 14.6 | 3.0～5.7 | 5～20 | 4～33 |
| | 200-220V | 60Hz | 148 | 120 | 100 | 14.5 | 3.2～6.0 | 8～23 | 4～33 |
| CLK-65J | 200V | 50Hz | 153 | 140 | 73 | 11.0 | 3.9～6.7 | 6～25 | 4～33 |
| | 200-220V | 60Hz | 160 | 140 | 112 | 17.2 | 4.2～7.0 | 10～26 | 4～33 |
| CLK-65H | 200V | 50Hz | 145 | 120 | 175 | 19.0 | 3.8～6.5 | 8～35 | 4～33 |
| | 200-220V | 60Hz | 148 | 120 | 190 | 18.5 | 4.2～7.0 | 8～35 | 4～33 |
| CLK-80H<br>CLK-100H | 200V | 50Hz | 147 | 120 | 255 | 23.0 | 5.2～8.6 | 5～35 | 4～33 |
| | 200-220V | 60Hz | 150 | 120 | 270 | 23.1 | 5.9～9.9 | 5～35 | 4～33 |
| CLK-125H<br>CLK-150H | 200V | 50Hz | 155 | 120 | 560 | 55 | 13.5～19.0 | 12～34 | 8～33 |
| | 200-220V | 60Hz | 158 | 120 | 585 | 55 | 15.5～21.0 | 12～34 | 8～33 |
| CLK-200H<br>CLK-250H | 200V | 50Hz | 148 | 120 | 682 | 64 | 9.5～17.5 | 16～31 | 9～33 |
| | 200-220V | 60Hz | 154 | 120 | 726 | 61 | 8.1～19.0 | 16～35 | 9～33 |

Notes. ① IEC 60947-4-1 stipulate that 85% of rated voltage be applied to coil for switching operation, with satisfactory performance.
② Minimum operating voltage indicate 20 operations with zero failure.
③ 60Hz is used for 220V input, in addition to operating voltage.
④ Values measured at 20℃±15℃ ambition temperature.
⑤ Select operating transformers with capacities of at least a third of the electromagnet inrush capacity.

## Standard service conditions

| | |
|---|---|
| (1) Standard ambient temperature | Open Model (to be used in control box)55℃ |
| (2) Maximum ambient temperature | Open Model 60℃(mean daily temperature not to exceed 50℃) |
| (3) Minimum ambient temperature | −5℃ |
| (4) Ambient storage temperature | −20℃～70℃ |
| (5) Relative humidity | 45～85%RH |
| (6) Altitude | 2,000m max. |
| (7) Vibration-resistant | 10～55Hz 2G |
| (8) Shock-resistant | 5G |
| (9) Atmosphere | Don't dew and freeze, and must not contain much dust, smoke, corrosive gas, flammable gas, vapor, and salt.<br>And it is impossible to use a hermetically sealed box.<br>(Except CLK-25JF2, 15JFC,15JC) |
| (10)Pollution degree | Please use magnetic contactors and starters in environment of lower than Pollution degree3.<br>Pollution degree3:Conductive pollutant occurs.<br>Or<br>Pollution of dry non-conductive occurs in normal condition. But pollutant of conductive occurs in dew condensation condition. (IEC 60947-1) |

## Mounting space

For mounting more than one magnetic starters in arow, make sure that the space between the units is more than the distance indicated in the table below. Also, be sure that the space between the starter and other metalic items is more than the distance indicated below.

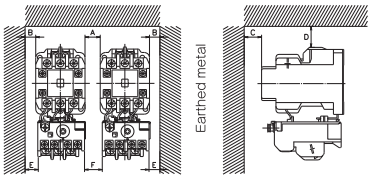


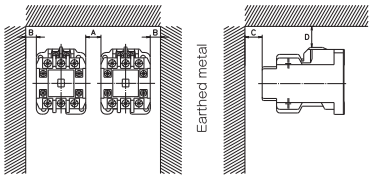


【In the case of Faston terminal, please ensure the space(C) from RESEPVTACUL.】

| Model \ Space (mm) | | A | B | C | D | E | F |
|---|---|---|---|---|---|---|---|
| Magnetic Starters | CLK-15JTC,25J3T | 5 | 5 | 5 | 10 | 5 | 5 |
| | CLK-20,26,28JT (C) | 5 | 5 | 5 | 10 | 5 | 5 |
| | CLK-35J3T,35,40,50,65JT (C) | 5 | 5 | 5 | 10 | 5 | 5 |
| | CLK-65～100HTC | 5 | 5 | 5 | 30 | 5 | 5 |
| | CLK-125,150HTC | 5 | 5 | 5 | 40 | 5 | 5 |
| | CLK-200HTC | 5 | 10 | 5 | 50 | 10 | 5 |
| | CLK-250HTC | – | – | 5 | 50 | 10 | 15 |

Notes. ①The space indicates the distance from the largest part of the product.
②Also applies to magnetic starters with 3-element thermal overload relays.

| Model \ Space (mm) | | A | B | C | D |
|---|---|---|---|---|---|
| Magnetic Contactor | CLK-25JF2,15JFC | 5 | 5 | 5 | 10 |
| | CLK-15JC | 5 | 5 | 5 | 10 |
| | CLK-25J2,25J3 | 5 | 5 | 5 | 10 |
| | CLK-20,26,28J | 5 | 5 | 5 | 10 |
| | CLK-35J3,35,40,50,65J | 5 | 5 | 5 | 10 |
| | CLK-65～100H | 5 | 5 | 5 | 30 |
| | CLK-125,150H | 5 | 5 | 5 | 40 |
| | CLK-200H | 5 | 10 | 5 | 50 |
| | CLK-250H | 20 | 10 | 5 | 50 |

Note. ① The space indicates the distance from the largest part of the product.

| Model \ Item | Scerw size | | | Suitable crimp-style terminal | | Tightening torque N・m {kgf・cm} | |
|---|---|---|---|---|---|---|---|
| | Main circuit | | Control circuit | Main circuit | Control circuit | Main circuit | Control circuit |
| | Contactor | Thermal | | | | | |
| CLK-25JF2 | – | – | – | #250series (Mathch to POSITIVE ROCK CONNECTION) | | – | – |
| CLK-15JC | M3.5 | M4 | M3.5 | 1.25-3.5～2-3.5<br>1.25-4～5.5-4① | 1.25-3.5 ～ 2-3.5 | M3.5:0.8～1.2{8～12}<br>M4 :1.2～1.8{12～18}① | 0.8～1.2{8～12} |
| CLK-25J2,25J3 | M4 | M4 | | 1.25-4～5.5-4 | | 1.2～1.8{12～18} | |
| CLK-20J | | | | | | | |
| CLK-26J,28J | | | | | | | |
| CLK-35J3,35J,40J | M5 | M5 | | 1.25-5～14-5 | | 2.4～3.5{24～36} | |
| CLK-50J | | | | | | | |
| CLK-65J | | | | | | | |
| CLK-65H | M6 | M6 | | 2-6～38-6S② | | 3.9～5.9{40～60} | |
| CLK-80H | | | | | | | |
| CLK-100H | | | | | | | |
| CLK-125H | M8 | M8 | | 2-8～CB80-8③ | | 9.0～13.5{92～138} | |
| CLK-150H | | | | | | | |
| CLK-200H | M8 | M8 | | 2-8～CB100-8③ | | | |
| CLK-250H | M10 | M10 | | 2-10～150-10 | | 18.1～27.0{185～275} | |

Notes. ①Thermal overload relay side
②Standard 38-6 crimp-type terminal is to wide. Please use 38-6S (Nichifu Terminal industries CO.,Ltd.) or 38-S6 (Japan Solderless Terminal Mfg. CO.,Ltd.)
③Standard 80-8 and 100-8 crimp-type terminal lugs are too wide. Please use CB-type terminal connectors for low-voltage switching devices (Nichifu Terminal industries CO.,Ltd.) or for molded case circuit breakers (Japan Solderless Terminal Mfg. CO.,Ltd.).

## Power supply voltage of the control circuit

The voltage and frequency of the operating circuit should be the same as the rated voltage and frequency of the operating coil, if the voltage is greater than 100% of the rated voltage of the coil, this will result various deterio rations for coil insulation and for mechanical and electrical performances. At the inrush time, if the power supply voltage is less than the minimum operating voltage of contactors, it may cause the coil barning out because of small coil impedance, contact chattering or contact welding.

## Application in the circuit exceeding AC380V

When using solderless terminals for the circuit exceeding AC380V, use of solderless terminals with insulation tube is recommended.

## Auxiliary contact terminal (NC)

When NC auxiliary contact terminal is inserted into the magnetic contactor,be sure to push the contactor rod insertion. (When the terminal falls out or inspection.) (Except CLK-25JF2, CLK-15JFC, CLK-15JC, 25J2, 25J3.)

## Maintenance

· Contact
The contact tips will discolor slightly and become irregular in using, but this will not affect their pertormance. Do not file the tips, as this will shorten their contact life. Contacts should be replaced when the thickness of the contact tips becomes half the size of new ones. All three phases should be replaced at the same time.

· Core
To minimize hum level, contact surfaces of cores are polished to a high degree of flatness and coated with a corrosion-resistant finish. As will as being matched to the shading coil, movable core and fixed core. However, in long-term storage, dirt, iron filings, and rust through humidity on the core surfaces may cause core humming. So appropriate storage conditions are highly requested.

· Do not lubricate
Abrasion of moving parts is very small. The switch is designed to operate with stable characteristics. Lubrication may cause the magnetic contactor to prevent its normal operations. Please exercise caution, especially when used in oil-operated machinery.



## Connecting of tab terminal

· For connecting,please put "#250" to use.
It is possible to use "POSSITIVE ROCK CONNECTER" also.

· Faston terminal is marked with a triangle mark.
When connecting, plase verifies mark.
But coil terminal isn't represented.

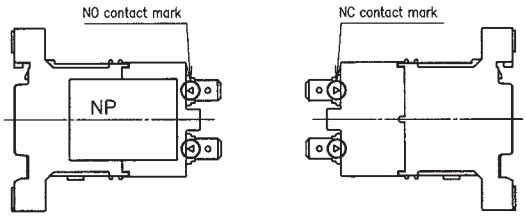


· When connecting, make certain that Faston terminal is connected.
When connecting, plase plwg in a RESEPUTACUL prependicalar to the Faston terminal.

· When pulling out RESEPUTACUL from terminal, please pull out RESEPUTACUL one by one.
And pull out RESEPUTACUL perpendicular to the Faston terminal.

## <Cautions>

When a contact welding is occurred by causes indicated below, there would be the danger such as reckless driving of machines and abnormal heat of the heater. Please use with the commiserations for the safety supposing the failure of making and breaking operations by mechanical rocking or contact welding.
Moreover, the thermal overload relay cannot protect phenomena.

· Making / Breaking current and operation under use over-spec.
· Abnormal consumption of contact-tip and the life of contact-tip.
· Secular variation
· Chattering of contact.
· Instantaneous voltage drops of the power supply.

## 25JF2

CLK-25JF2

(Only for 2-pole type)

### Ratings

| Frame | | | 25J |
|---|---|---|---|
| Rated capacity | AC−3 (kW) | 110V | 1.2 |
| | | 240V | 2.4 |
| | AC−1 (A) | 240V | 30 |
| | | 440V | 21 |

Notes. Rated capacity is single phase motor rating.

### Conforming wire size and tightening torque

| | | Conforming terminal connector |
|---|---|---|
| Contactor | Main circuit | #250 series (Mathch to POSITIVE ROCK CONNECTION) |
| | Control circuit | |

Magnetic contactor CLK-25JF2

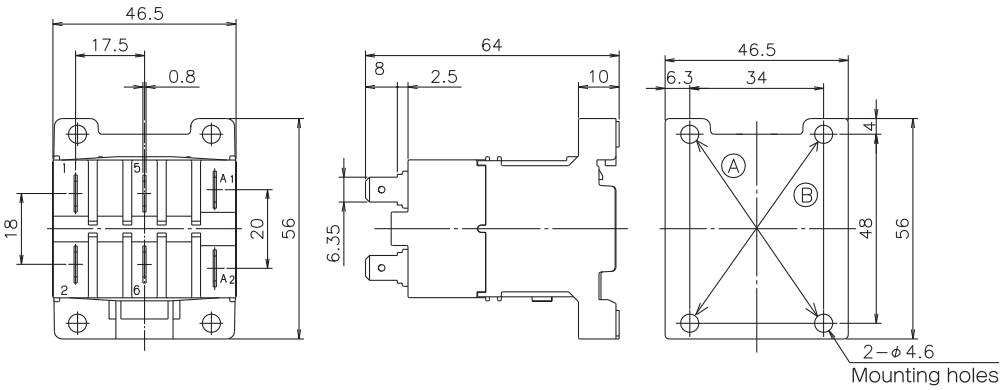


Ⓐ 34×48 (recommended)
Ⓑ 34×48 (compatible with CLK-15H)

Contact configuration

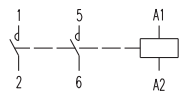


Weight 0.16kg

## 15JFC

CLK-15JFC

### Ratings

| Frame | | | 15J |
|---|---|---|---|
| Rated capacity | AC−3 (kW) | 240V | 3 |
| | | 440V | 4.5 |
| | AC−1 (A) | 240V | 24 |
| | | 440V | 18 |

### Conforming wire size and tightening torque

| | | Conforming terminal connector |
|---|---|---|
| Contactor | Main circuit | #250 series (Mathch to POSITIVE ROCK CONNECTION) |
| | Control circuit | |

Magnetic contactor CLK-15JFC, 15JFDCC

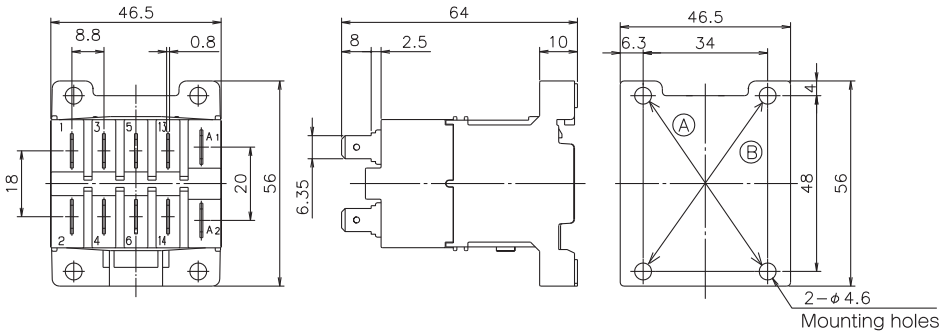


Ⓐ 34×48 (recommended)
Ⓑ 34×48 (CLK-15H)

| Aux. Contact | Contact configuration |
|---|---|
| 1NO | 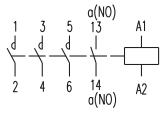 |
| 1NC | 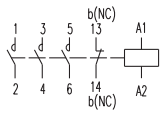 |

Weight 15JFC 0.16kg
15JFDCC 0.18kg

## 15JC

CLK-15JC CLK-15JTC

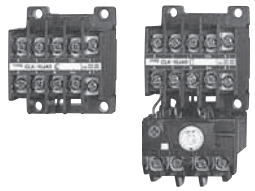

## Ratings

| Frame | | | 15J |
|---|---|---|---|
| Rated capacity | AC−3 (kW) | 240V | 3 |
| | | 440V | 4.5 |
| | AC−1 (A) | 240V | 20 |
| | | 440V | 18 |

## Conforming wire size and tightening torque

| | | Screw size | Conforming terminal connector | Tightening torque N·m(kgf·cm) |
|---|---|---|---|---|
| Contactor | Main circuit | M3.5 | 1.25−3.5 ~ 2−3.5 | 0.8~1.2 (8~12) |
| | Control circuit | | | |
| Thermal overload relay | Main circuit | M4 | 1.25−4~5.5−4 | 1.2~1.8 (12~18) |
| | Control circuit | M3.5 | 1.25−3.5~2−3.5 | 0.8~1.2 (8~12) |

## Magnetic contactor CLK-15JC, 15JDCC

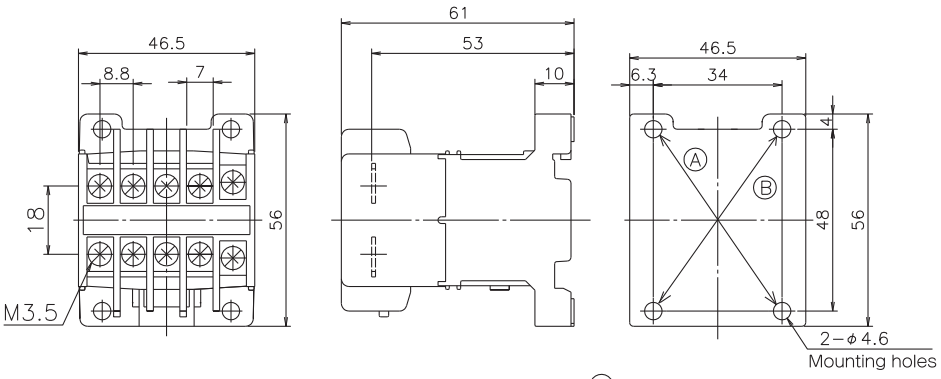


Ⓐ 34×48 (recommended)
Ⓑ 34×48 (compatible with CLK-15H)

| Aux. Contact | Contact configuration |
|---|---|
| 1a (1NO) | 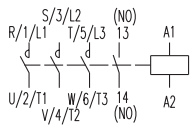 |
| 1b (1NC) | 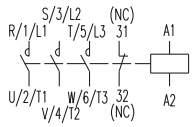 |

Weight 15JC=0.17kg
15JDCC=0.19kg

## Magnetic starter CLK-15JTC (15JGTC, 15JT-30)

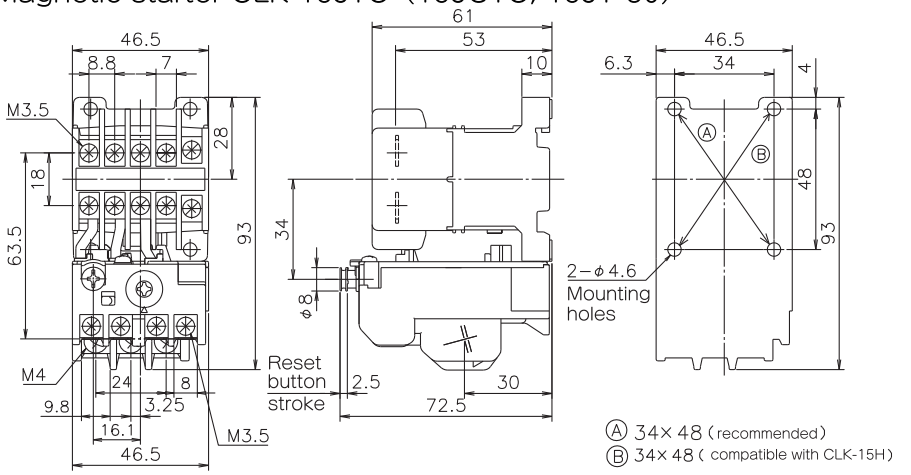


Ⓐ 34×48 (recommended)
Ⓑ 34×48 (compatible with CLK-15H)

| Aux. Contact | Contact configuration |
|---|---|
| 1a (1NO) | 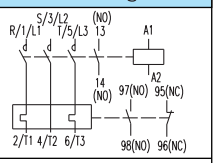 |
| 1b (1NC) | 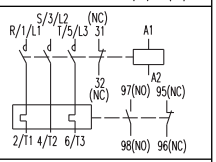 |
| For 3-heaters and phase-failure protection | 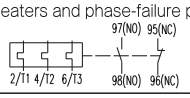 |

Weight 0.29kg

## 25J

CLK-25J2·25J3 CLK-25J3T

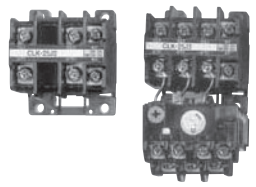

## Ratings

| Frame | | | 2P | | 3P | |
|---|---|---|---|---|---|---|
| | | | 25J2 | 25J201 | 25J3 | 25J301 |
| Rated capacity | AC−3 (A) | 110V | 30 | 30 | 26 | 30 |
| | | 240V | 26 | 30 | 26 | 26 |
| | | 440V | – | – | 18 | – |
| | AC−1 (A) | 110V | 30 | 32 | 30 | 30 |
| | | 240V | 30 | 32 | 30 | 30 |
| | | 440V | – | – | 20 | – |

## Conforming wire size and tightening torque

| | | Screw size | Conforming terminal connector | Tightening torque N·m(kgf·cm) |
|---|---|---|---|---|
| Contactor | Main circuit | M4 | 1.25−4~5.5−4 | 1.2~1.8 (12~18) |
| | Control circuit | M3.5 | 1.25−3.5~2−3.5 | 0.8~1.2 (8~12) |
| Thermal overload relay | Main circuit | M4 | 1.25−4~5.5−4 | 1.2~1.8 (12~18) |
| | Control circuit | M3.5 | 1.25−3.5~2−3.5 | 0.8~1.2 (8~12) |

### Magnetic contactor CLK-25J2,25J201

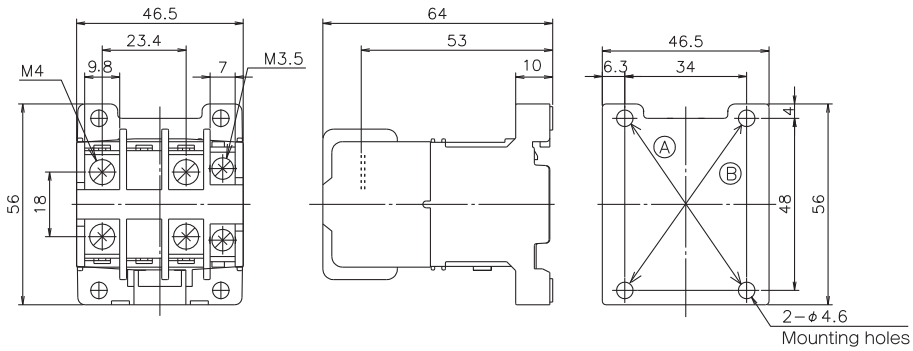


Ⓐ 34×48 (recommended)
Ⓑ 34×48

| Aux. Contact | Contact configuration |
|---|---|
| – | 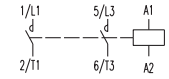 |
| 1NC | 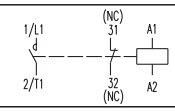 |

Weight 0.17kg

### Magnetic contactor CLK-25J3,25J301

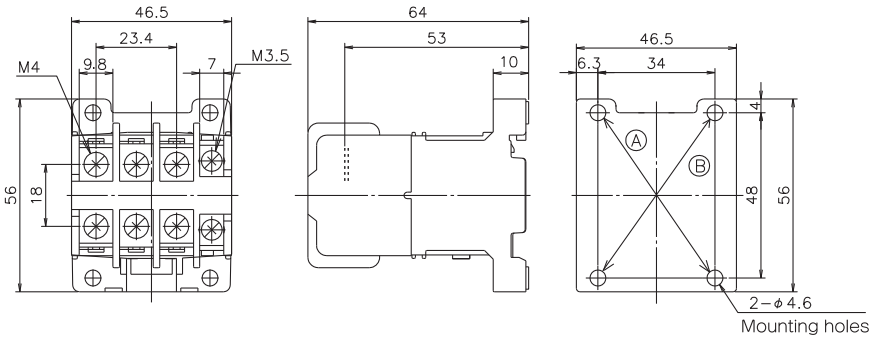


Ⓐ 34×48 (recommended)
Ⓑ 34×48

| Aux. Contact | Contact configuration |
|---|---|
| – | 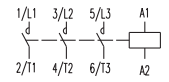 |
| 1NC | 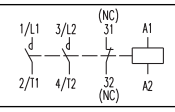 |

Weight 0.17kg

### Magnetic starter CLK-25J3T (25J3GT,25J3T-3)

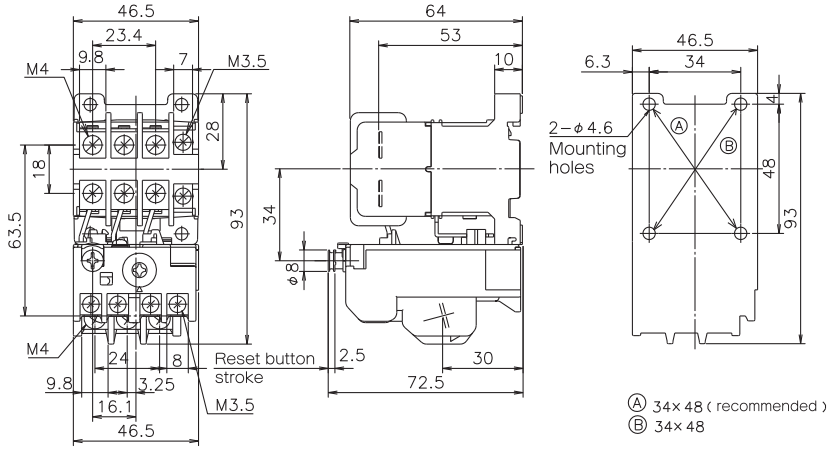


Ⓐ 34×48 (recommended)
Ⓑ 34×48

| Aux. Contact | Contact configuration |
|---|---|
| – | 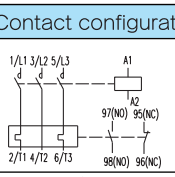 |
| For 3-heaters and phase-failure protection | 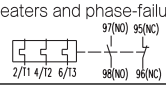 |

Weight 0.29kg

## 20J・26J・28J

CLK-20J·26J·28J CLK-20JTC·26JTC·28JT

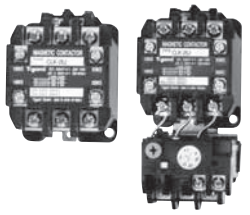

## Ratings

| Frame | | | 20J | 26J | 28J |
|---|---|---|---|---|---|
| Rated capacity | AC−3 (kW) | 240V | 4 | 5.5 | 7.5 |
| | | 440V | 5.5 | 7.5 | 11 |
| | AC−1 (A) | 240V | 26 | 30 | 30 |
| | | 440V | 20 | 28 | 28 |

## Conforming wire size and tightening torque

| | | Screw size | Conforming terminal connector | Tightening torque N·m(kgf·cm) |
|---|---|---|---|---|
| Contactor | Main circuit | M4 | 1.25−4~5.5−4 | 1.2~1.8 (12~18) |
| | Control circuit | M3.5 | 1.25−3.5~2−3.5 | 0.8~1.2 (8~12) |
| Thermal overload relay | Main circuit | M4 | 1.25−4~5.5−4 | 1.2~1.8 (12~18) |
| | Control circuit | M3.5 | 1.25−3.5~2−3.5 | 0.8~1.2 (8~12) |

### Magnetic contactor CLK-20J, 26J, 28J

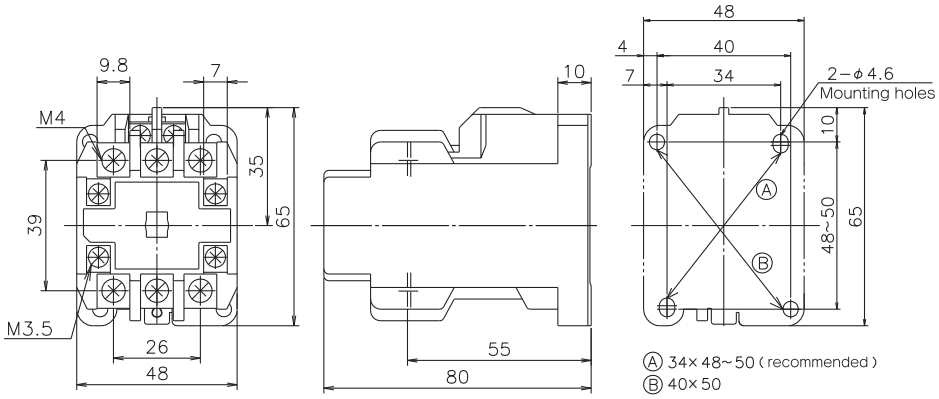


| Aux. Contact | Contact configuration |
|---|---|
| 1a1b (1NO1NC) | 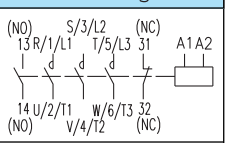 |
| 2a (2NO) | 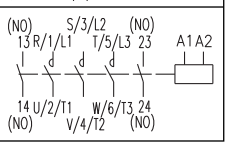 |

Weight 0.27kg

### Magnetic starter CLK-20JTC, 26JTC, 28JT(20JGTC, 26JGTC, 28JGT, 20JT-3C, 26JT-3C, 28JT-3)

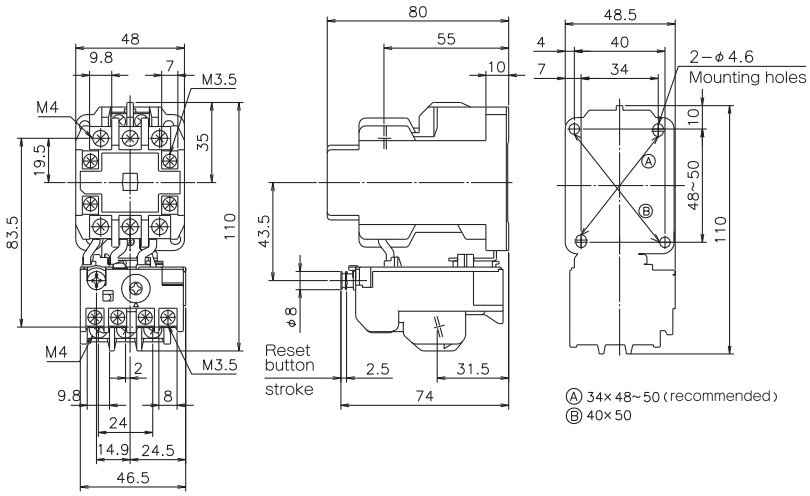


| Aux. Contact | Contact configuration |
|---|---|
| 1a1b (1NO1NC) | 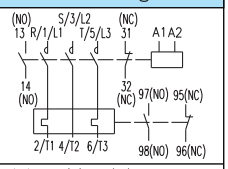 |
| 2a (2NO) | 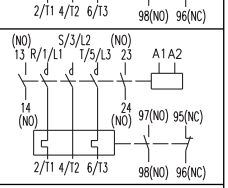 |
| For 3-heaters and phase-failure protection | 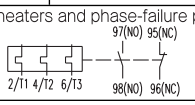 |

Weight 0.37kg

## 35J3

CLK-35J3 CLK-35J3T

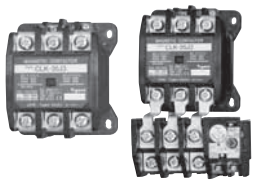

## Ratings

| Frame | | | 35J3 |
|---|---|---|---|
| Rated capacity | AC−3 (kW) | 240V | 7.5 |
| | | 440V | 11 |
| | AC−1 (A) | 240V | 45 |
| | | 440V | 38 |

## Conforming wire size and tightening torque

| | | Screw size | Conforming terminal connector | Tightening torque N·m(kgf·cm) |
|---|---|---|---|---|
| Contactor | Main circuit | M5 | 1.25−5~14−5 | 2.4~3.5 (24~36) |
| | Control circuit | M3.5 | 1.25−3.5~2−3.5 | 0.8~1.2 (8~12) |
| Thermal overload relay | Main circuit | M5 | 1.25−5~14−5 | 2.4~3.5 (24~36) |
| | Control circuit | M3.5 | 1.25−3.5~2−3.5 | 0.8~1.2 (8~12) |

### Magnetic contactor CLK-35J3

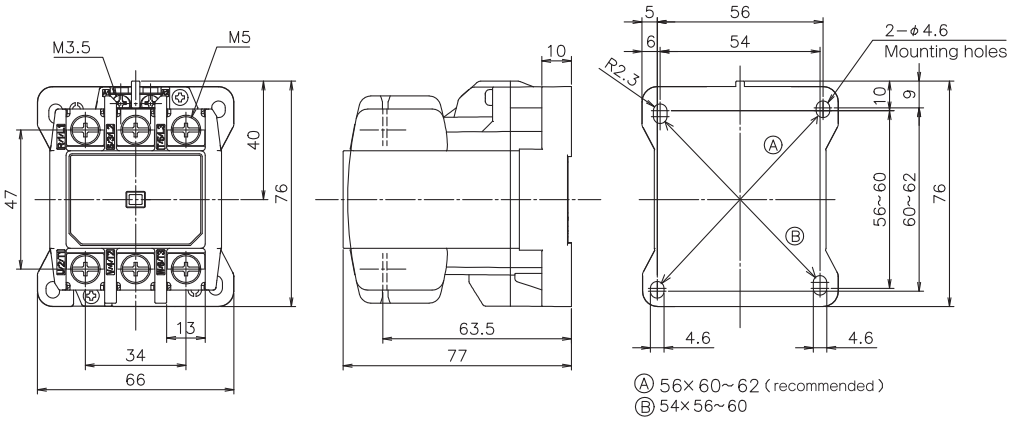


Contact configuration

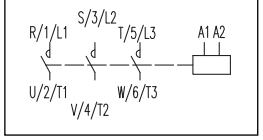


Weight 0.33kg

### Magnetic starter CLK-35J3T (35J3GT, 35J3T-3)

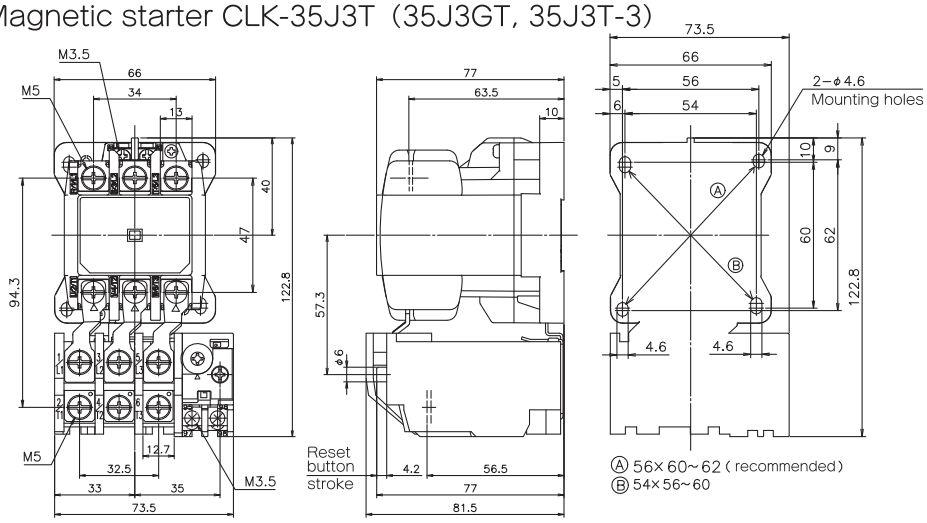


Contact configuration

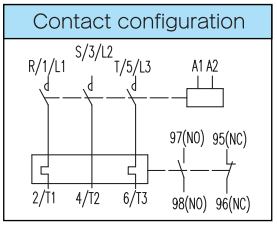


Weight 0.58kg

6

## 35J・40J

CLK-35J·40J CLK-35JTC·40JT

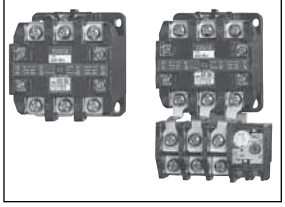

## Ratings

| Frame | | | 35J | 40J |
|---|---|---|---|---|
| Rated capacity | AC−3 (kW) | 240V | 7.5 | 7.5 |
| | | 440V | 11 | 15 |
| | AC−1 (A) | 240V | 45 | 45 |
| | | 440V | 38 | 38 |

## Conforming wire size and tightening torque

| | | Screw size | Conforming terminal connector | Tightening torque N·m(kgf·cm) |
|---|---|---|---|---|
| Contactor | Main circuit | M5 | 1.25−5~14−5 | 2.4~3.5 (24~36) |
| | Control circuit | M3.5 | 1.25−3.5~2−3.5 | 0.8~1.2 (8~12) |
| Thermal overload relay | Main circuit | M5 | 1.25−5~14−5 | 2.4~3.5 (24~36) |
| | Control circuit | M3.5 | 1.25−3.5~2−3.5 | 0.8~1.2 (8~12) |

### Magnetic contactor CLK-35J, 40J

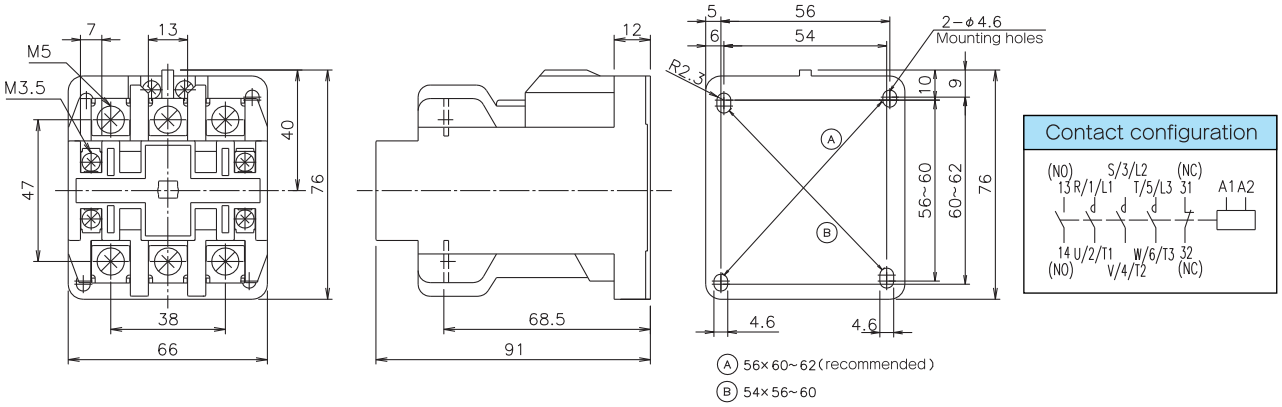


Weight 0.55kg

### Magnetic starter CLK-35JTC, 40JT (35JGTC, 40JGT, 35JT-3C, 40JT-3)

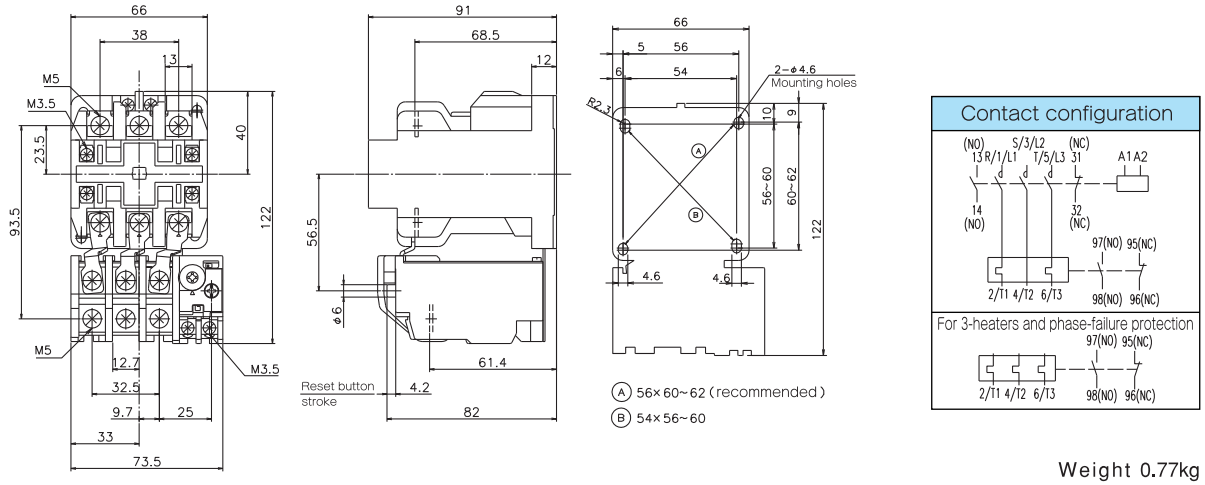


Weight 0.77kg

## 50J

CLK-50J CLK-50JTC

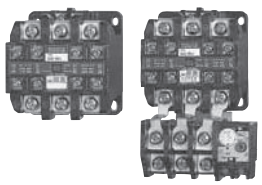

## Ratings

| Frame | | | 50J |
|---|---|---|---|
| Rated capacity | AC−3 (kW) | 240V | 11 |
| | | 440V | 19 |
| | AC−1 (A) | 240V | 60 |
| | | 440V | 60 |

## Conforming wire size and tightening torque

| | | Screw size | Conforming terminal connector | Tightening torque N·m(kgf·cm) |
|---|---|---|---|---|
| Contactor | Main circuit | M5 | 1.25−5~14−5 | 2.4~3.5 (24~36) |
| | Control circuit | M3.5 | 1.25−3.5~2−3.5 | 0.8~1.2 (8~12) |
| Thermal overload relay | Main circuit | M5 | 1.25−5~14−5 | 2.4~3.5 (24~36) |
| | Control circuit | M3.5 | 1.25−3.5~2−3.5 | 0.8~1.2 (8~12) |

### Magnetic contactor CLK−50J

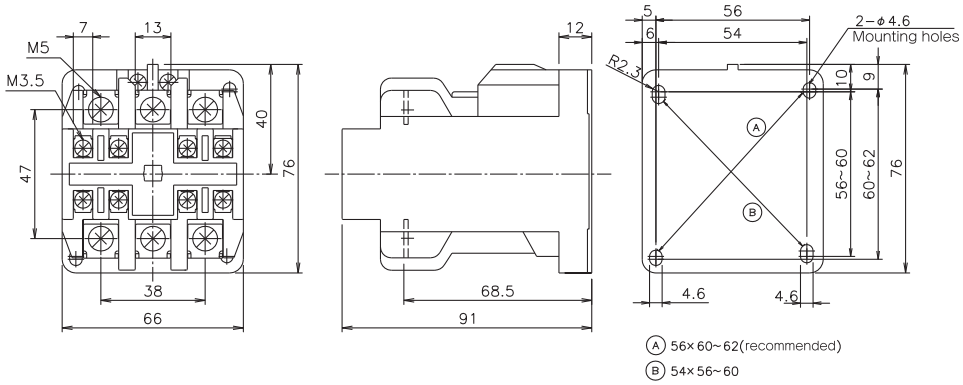


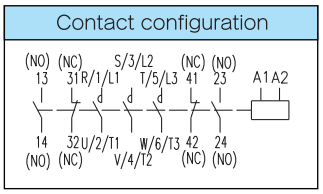


Weight 0.55kg

### Magnetic starter CLK−50JTC (50JGTC, 50JT-3C)

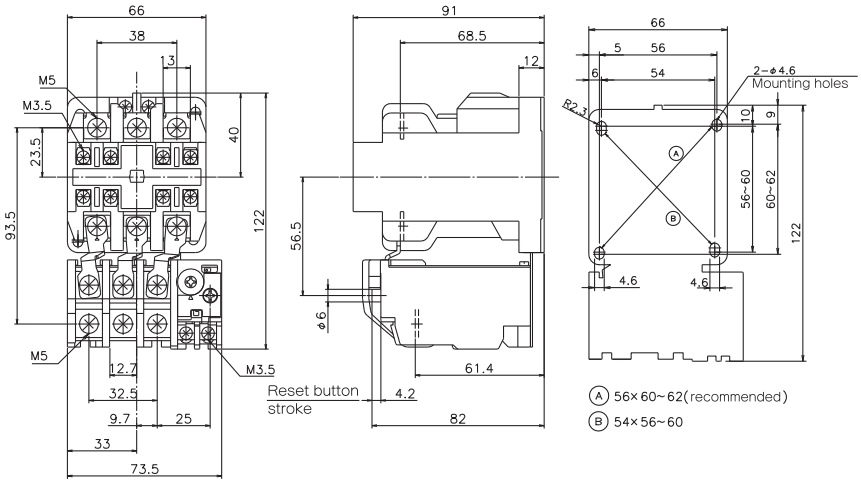


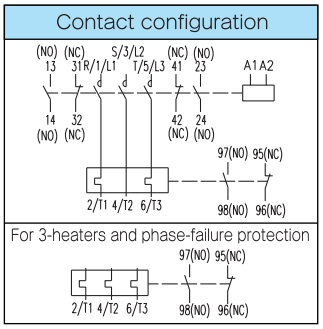


Weight 0.77kg

## 65J

CLK-65J CLK-65JT

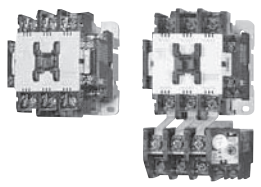

## Ratings

| Frame | | | 65J |
|---|---|---|---|
| Rated capacity | AC−3 (kW) | 240V | 15 |
| | | 440V | 30 |
| | AC−1 (A) | 240V | 65 |
| | | 440V | 65 |

## Conforming wire size and tightening torque

| | | Screw size | Conforming terminal connector | Tightening torque N·m(kgf·cm) |
|---|---|---|---|---|
| Contactor | Main circuit | M5 | 1.25−5~14−5 | 2.4~3.5 (24~36) |
| | Control circuit | M3.5 | 1.25−3.5~2−3.5 | 0.8~1.2 (8~12) |
| Thermal overload relay | Main circuit | M5 | 1.25−5~14−5 | 2.4~3.5 (24~36) |
| | Control circuit | M3.5 | 1.25−3.5~2−3.5 | 0.8~1.2 (8~12) |

### Magnetic contactor CLK-65J

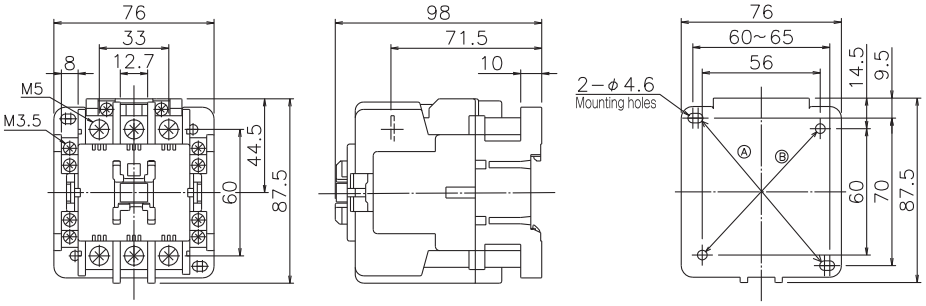


Ⓐ60~65×70 (recommended)
Ⓑ56×60 (compatible with CLK−35J, 50J)

Contact configuration

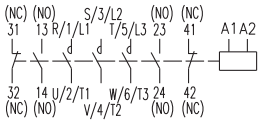


Weight 0.68kg

### Magnetic starter CLK-65JT (65JGT, 65JT-3)

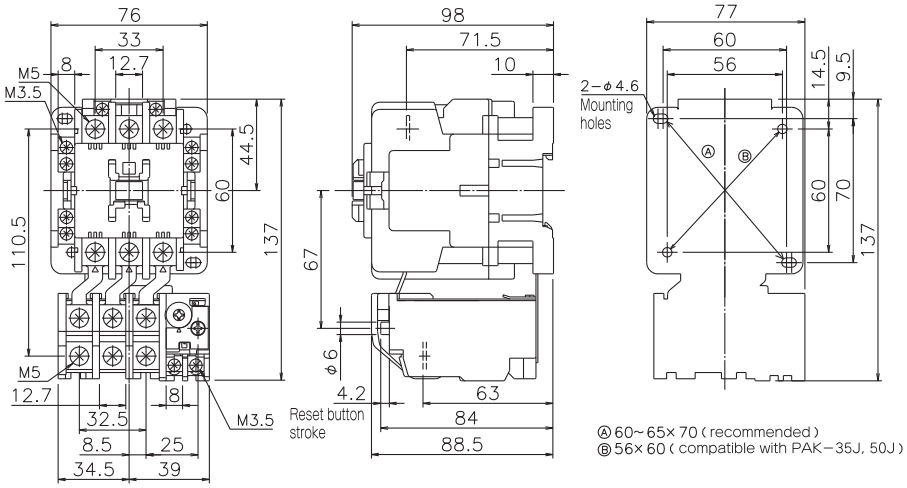


Ⓐ60~65×70 (recommended)
Ⓑ56×60 (compatible with PAK−35J, 50J)

Contact configuration

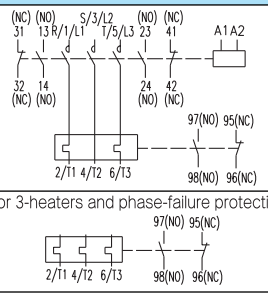


Weight 0.91kg

## 65H・80H・100H

CLK-65H 80H 100H

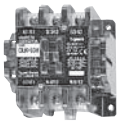

CLK-65HTC 80HTC 100HTC

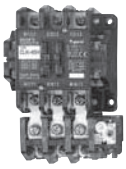

## Ratings

| Frame | | | 65H | 80H | 100H |
|---|---|---|---|---|---|
| Rated capacity | AC−3 (kW) | 220V | 15 | 19 | 22 |
| | | 440V | 30 | 37 | 40 |
| | AC−1 (A) | 220V | 75 | 90 | 110 |
| | | 440V | 75 | 90 | 110 |

## Conforming wire size and tightening torque

| | | Screw size | Conforming terminal connector | Tightening torque N·m(kgf·cm) |
|---|---|---|---|---|
| Contactor | Main circuit | M6 | 2−6~38−6S | 3.9~5.9 (40~60) |
| | Control circuit | M3.5 | 1.25−3.5~2−3.5 | 0.8~1.2 (8~12) |
| Thermal overload relay | Main circuit | M6 | 2−6~38−6S | 3.9~5.9 (40~60) |
| | Control circuit | M3.5 | 1.25−3.5~2−3.5 | 0.8~1.2 (8~12) |

### Magnetic contactor CLK-65H, 80H, 100H

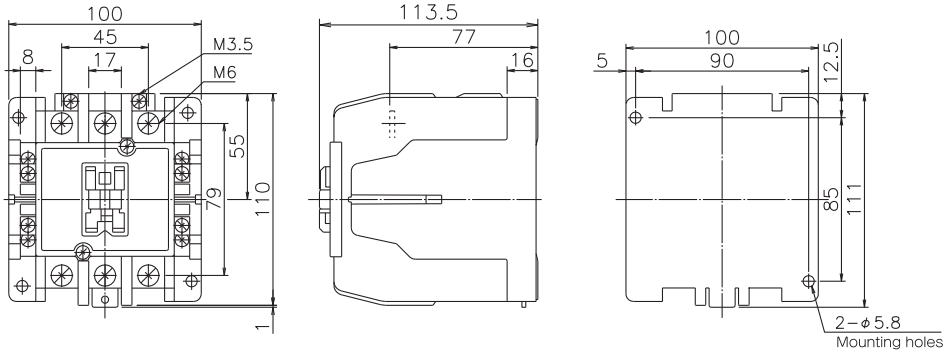


Contact configuration

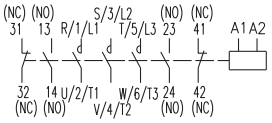


Weight 65H=1.3kg
80H,100H=1.5kg

### Magnetic starter CLK-65HTC,80HTC,100HTC(65HGTC,80HGTC,100HGTC,65HT-3C,80HT-3C,100HT-3C)

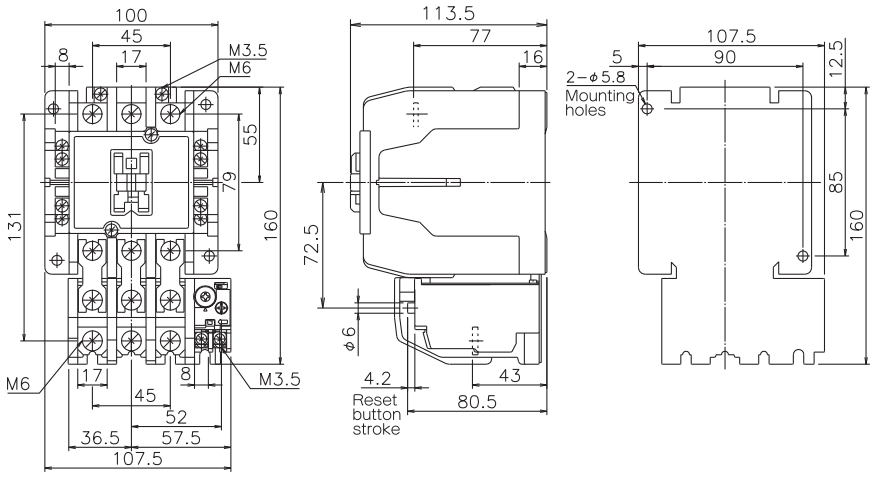


Contact configuration

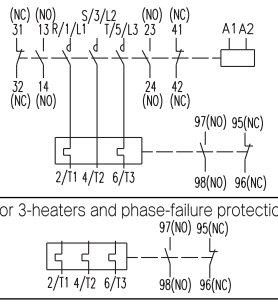


Weight 65HTC=1.7kg
80HTC,100HTC=1.9kg

## 125H・150H

CLK-125H 150H CLK-125HTC 150HTC

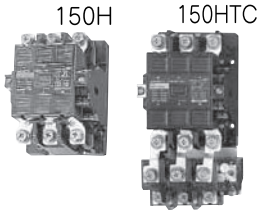

## Ratings

| Frame | | | 125H | 150H |
|---|---|---|---|---|
| Rated capacity | AC−3 (kW) | 220V | 30 | 37 |
| | | 440V | 55 | 60 |
| | AC−1 (A) | 220V | 150 | 170 |
| | | 440V | 150 | 170 |

## Conforming wire size and tightening torque

| | | Screw size | Conforming terminal connector | Tightening torque N·m(kgf·cm) |
|---|---|---|---|---|
| Contactor | Main circuit | M8 | 2−8~CB80−8 | 9.0~13.5 (92~138) |
| | Control circuit | M3.5 | 1.25−3.5~2−3.5 | 0.8~1.2 (8~12) |
| Thermal overload relay | Main circuit | M8 | 2−8~CB80−8 | 9.0~13.5 (92~138) |
| | Control circuit | M3.5 | 1.25−3.5~2−3.5 | 0.8~1.2 (8~12) |

### Magnetic contactor CLK-125H, 150H

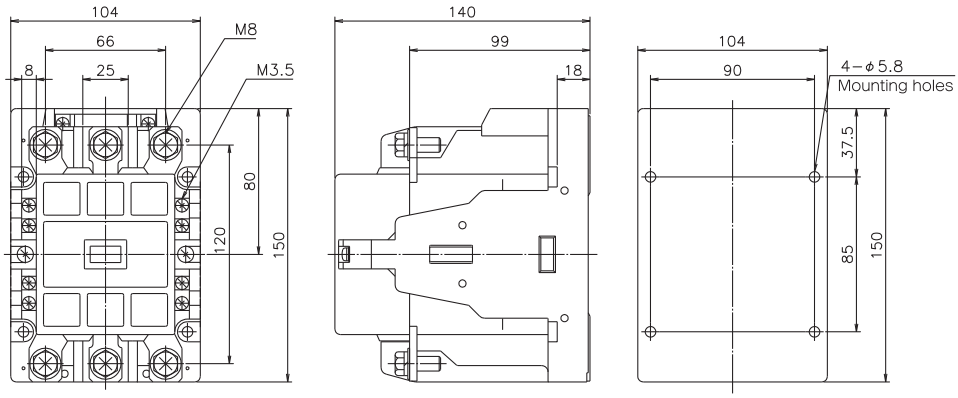


Contact configuration

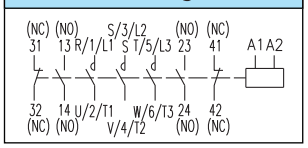


Weight 2.9kg

### Magnetic starter CLK-125HTC, 150HTC（125HGTC, 150HGTC, 125HT-3C, 150HT-3C）

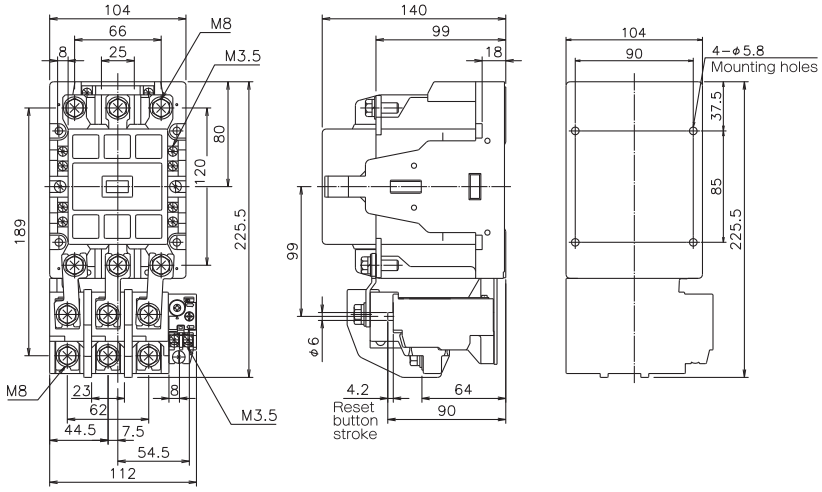


Contact configuration

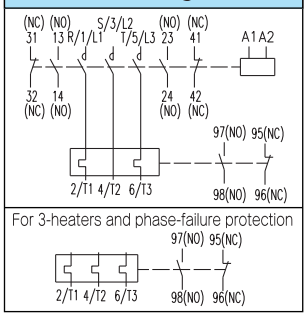


Weight 3.7kg

## 200H

CLK-200H CLK-200HTC

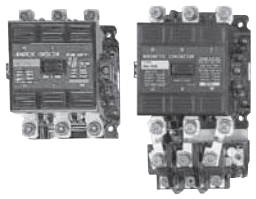

## Ratings

| Frame | | | 200H |
|---|---|---|---|
| Rated capacity | AC−3 (kW) | 220V | 50 |
| | | 440V | 80 |
| | AC−1 (A) | 220V | 220 |
| | | 440V | 220 |

## Conforming wire size and tightening torque

| | | Screw size | Conforming terminal connector | Tightening torque N·m(kgf·cm) |
|---|---|---|---|---|
| Contactor | Main circuit | M8 | 2−8~CB100−8 | 9.0~13.5 (92~138) |
| | Control circuit | M3.5 | 1.25−3.5~2−3.5 | 0.8~1.2 (8~12) |
| Thermal overload relay | Main circuit | M8 | 2−8~CB100−8 | 9.0~13.5 (92~138) |
| | Control circuit | M3.5 | 1.25−3.5~2−3.5 | 0.8~1.2 (8~12) |

### Magnetic contactor CLK-200H

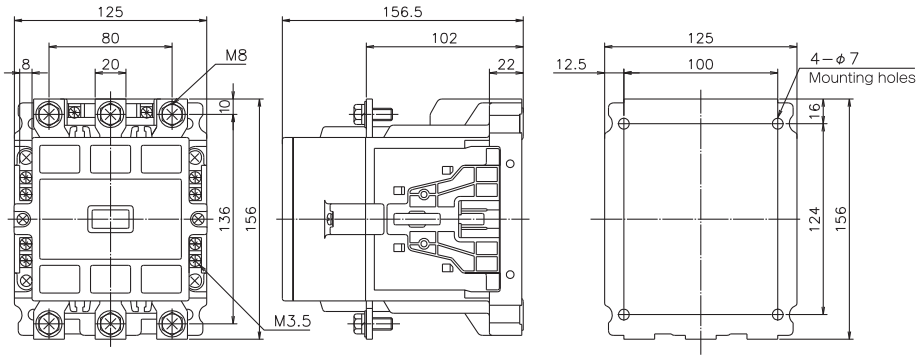


Contact configuration

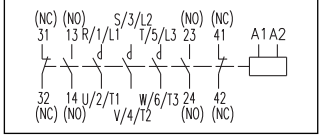


Weight 3.5kg

### Magnetic starter CLK-200HTC (200HGTC, 200HT-3C)

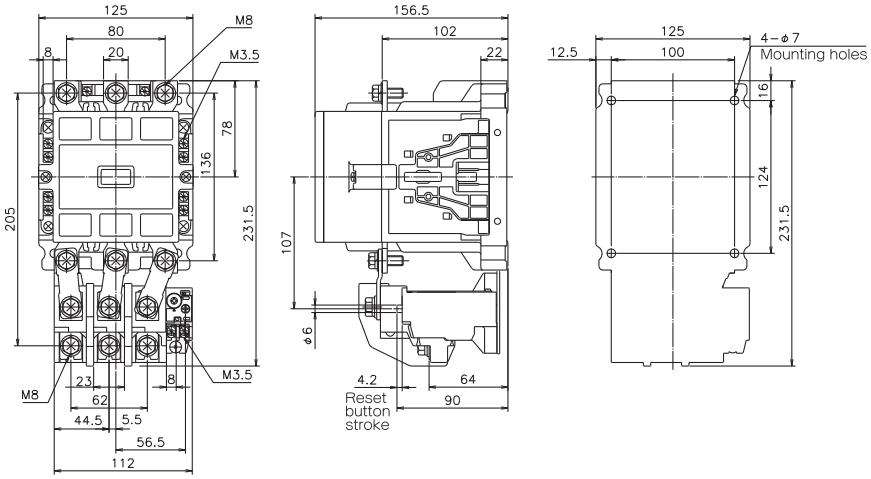


Contact configuration

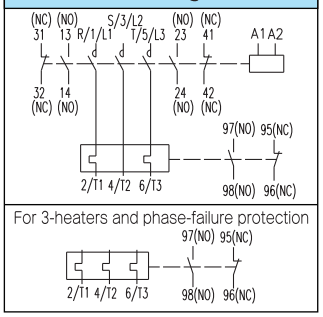


Weight 4.6kg

## 250H

CLK-250H CLK-250HTC

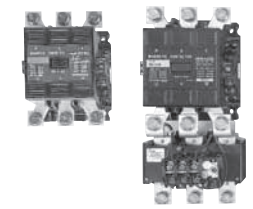

## Ratings

| Frame | | | 250H |
|---|---|---|---|
| Rated capacity | AC−3 (kW) | 220V | 68 |
| | | 440V | 90 |
| | AC−1 (A) | 220V | 260 |
| | | 440V | 260 |

Notes. Rated capacity is single phase motor rating.

## Conforming wire size and tightening torque

| | | Screw size | Conforming terminal connector | Tightening torque N·m(kgf·cm) |
|---|---|---|---|---|
| Contactor | Main circuit | M10 | 2−10~150−10 | 18.1~27.0 (185~275) |
| | Control circuit | M3.5 | 1.25−3.5~2−3.5 | 0.8~1.2 (8~12) |
| Thermal overload relay | Main circuit | M10 | 2−10~150−10 | 18.1~27.0 (185~275) |
| | Control circuit | M3.5 | 1.25−3.5~2−3.5 | 0.8~1.2 (8~12) |

### Magnetic contactor CLK-250H

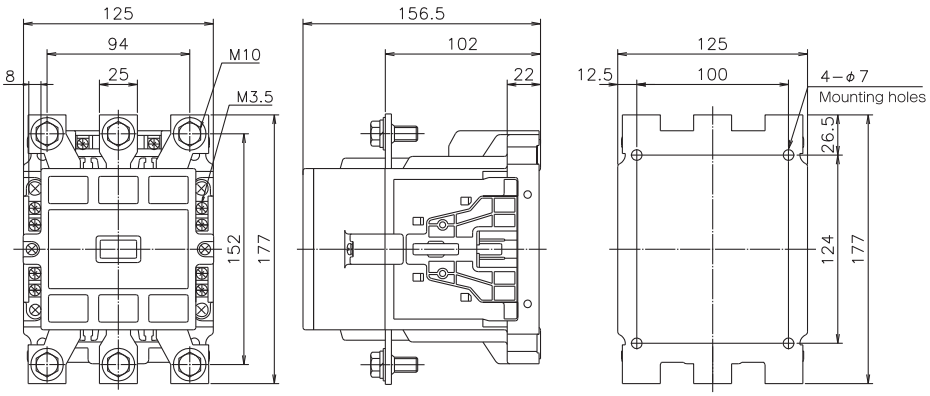


Contact configuration

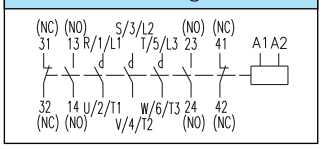


Weight 4.0kg

### Magnetic starter CLK-250HTC (250HGTC, 250HT-3C)

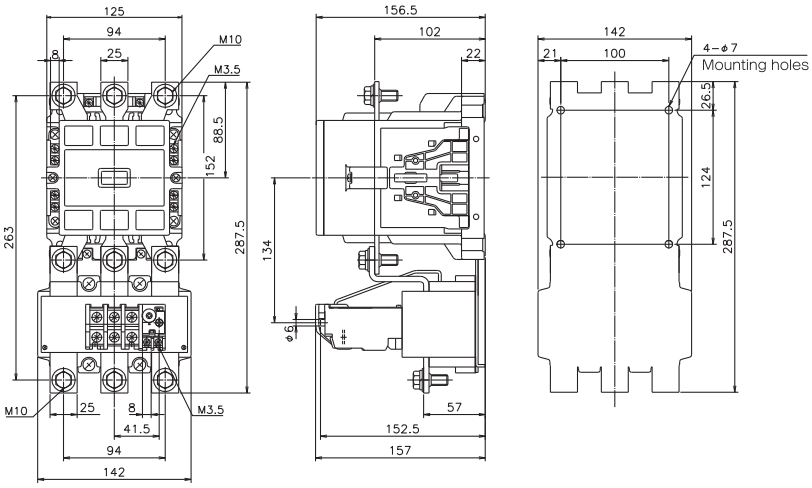


Contact configuration

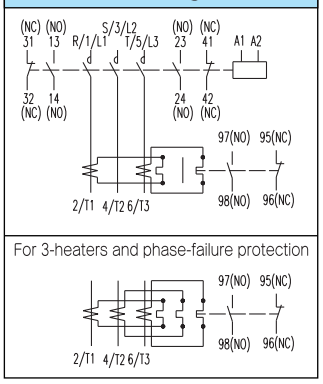


Weight 6.3kg

# Index


| Model | Description | Page |
|---|---|---|
| B | | |
| BASE FOR TJ-18N for □ | Base for TJ-18N | 95 |
| C | | |
| C-□ | Terminal protection cover | 92 |
| CLK-□ | Magnetic Contactors | 105 |
| CLK-□GT (C) | Magnetic Starters with phase-failure protection thermal overload relay | 105 |
| CLK-□T (C) | Magnetic Starters with 2-heaters thermal overload relays | 105 |
| CLK-□T-3 (C) | Magnetic Starters with 3-heaters thermal overload relays | 105 |
| CONNECTING BAR KIT for □ | Connecting bar kit | 95 |
| D | | |
| D-5A | DIN rail mounting adaptor | 94 |
| G | | |
| GT (J) -□ | Phase-failure protection thermal overload relay | 75 |
| H | | |
| HAU-□ | Auxiliary contact unit | 87 |
| HL-B | No-loss latch unit | 88 |
| M | | |
| MAIN CONTACT SPRING for □ | Main contact spring | 95 |
| ML-□ | Mechanical interlock unit set | 95 |
| P | | |
| PAK-□H | Magnetic contactor without enclosure | 3 ~ 44 |
| PAK-□HB | Magnetic contactor with enclosure | |
| PAK-□HGM (C) | Magnetic starters with phase-failure protection thermal overload relays with enclosure | |
| PAK-□HGT (C) | Magnetic starters with phase-failure protection thermal overload relays without enclosure | |
| PAK-□HGT-SL2 (C) | Magnetic starters with slow-trip themal overload relays without enclosure | |
| PAK-□HM (C) | Magnetic starter with enclosure | |
| PAK-□HM-3 (C) | Magnetic starters with 3-heaters themal overload relays with enclosure | |
| PAK-□HT (C) | Magnetic starter without enclosure | |
| PAK-□HT-SL2 (C) | Magnetic starters with slow-trip themal overload relays without enclosure | |
| PAK-□HT-3 (C) | Magnetic starters with 3-heaters themal overload relays without enclosure | |
| PAK-□J (C) | Magnetic contactor without enclosure | |
| PAK-□JB (C) | Magnetic contactor with enclosure | |
| PAK-□JGM (C) | Magnetic starters with phase-failure protection thermal overload relays with enclosure | |
| PAK-□JGT (C) | Magnetic starters with phase-failure protection thermal overload relays without enclosure | |
| PAK-□JGT-SL2 (C) | Magnetic starters with slow-trip themal overload relays without enclosure | |
| PAK-□JL | Mechanical latch magnetic contactors | |
| PAK-□JM (C) | Magnetic starter with enclosure | |
| PAK-□JM-3 (C) | Magnetic starters with 3-heaters themal overload relays with enclosure | |
| PAK-□JT (C) | Magnetic starter without enclosure | |
| PAK-□JT-SL2 (C) | Magnetic starters with slow-trip themal overload relays without enclosure | |
| PAK-□JT-3 (C) | Magnetic starters with 3-heaters themal overload relays without enclosure | |
| PAK-□8JS | Magnetic relays | 67 |
| PBP-□ | Push button swiches (Resin) | 103 |
| PBU-□ | Push button swiches (Steel) | 104 |

# Index


| Model | Description | Page |
|---|---|---|
| R | | |
| RSK-□H | Reversing magnetic contactor without enclosure | 3 ~ 28 |
| RSK-□HB | Reversing magnetic contactor with enclosure | |
| RSK-□HGM (C) | Reversing magnetic starters with phase-failure protection thermal overload relays with enclosure | |
| RSK-□HGT (C) | Reversing magnetic starters with phase-failure protection thermal overload relays without enclosure | |
| RSK-□HM (C) | Reversing magnetic starter with enclosure | |
| RSK-□HM-3 (C) | Reversing magnetic starters with 3-heaters themal overload relays with enclosure | |
| RSK-□HT (C) | Reversing magnetic starter without enclosure | |
| RSK-□HT-3 (C) | Reversing magnetic starters with 3-heaters themal overload relays without enclosure | |
| RSK-□J | Reversing magnetic contactor without enclosure | |
| RSK-□JB | Reversing magnetic contactor with enclosure | |
| RSK-□JGM (C) | Reversing magnetic starters with phase-failure protection thermal overload relays with enclosure | |
| RSK-□JGT (C) | Reversing magnetic starters with phase-failure protection thermal overload relays without enclosure | 45 ~ 58 |
| RSK-□JL | Reversing mechanical latch magnetic contactors | |
| RSK-□JM (C) | Reversing magnetic starter with enclosure | |
| RSK-□JM-3 (C) | Reversing magnetic starters with 3-heaters themal overload relays with enclosure | |
| RSK-□JT (C) | Reversing magnetic starter without enclosure | |
| RSK-□JT-3 (C) | Reversing magnetic starters with 3-heaters themal overload relays without enclosure | |
| S | | |
| SA-□ | Coil surge absorption unit | 93 |
| SDH-□ | 2-contactor type Star-Delta starter | 96 |
| SDH3-□ | 3-contactor type Star-Delta starter | 96 |
| SPARE COIL for □ | Spare coil | 95 |
| T | | |
| TC-□ | Terminal cover | 89 |
| T (J) -□ | Standard type thermal overload relay | 75 |
| TJ-□-3 | 3-heaters type thermal overload relay | 75 |

Magnetic Contactors
and
Thermal overload relays

PAK・RSK Series
CLK Series



## Warranty

■Warranty period
One year after arrival.

■Warranty range
If the products concerned have defects in material and workmanship under normal operating conditions within the warranty period, they shall be repaired at no charge. However, the following cases shall be excluded from no-charge repair.
①Defects caused by users' carelessness, acts of God and natural disasters.
②Failures caused by modifications and repair not carried out by us or personnel entrusted by us.
This warranty shall cover delivered products, but secondary damage inducing failure of delivered products cannot be compensated.

※Specifications subject to change without notice.

**Togami Electric Mfg.Co.,Ltd.**

Global Department（Tokyo Office）

Togami Bldg. 4-1-13 Aobadai, Meguro ward,
Tokyo 153-0042, JAPAN
TEL +81-3-3465-5324
FAX +81-3-5738-3622

CO227e 宣145-004 2019.E.AJY.S