Togami

Togami's
Magnetic Contactors and Thermal overload relays

PAK • RSK-J/H Series

CLK-J / H Series

ISO 9001 JQA-0913
ISO 14001 JQA-EM0915
HEAD OFFICE
Apr 2018
Catalog No. C0227e

Togami Electric Mfg.Co.,Ltd.

Printed in Japan

PAK·RSK Series

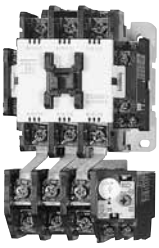

CLK Series

Togami magnetic starters have been regulary used throughout industries for the excellence and reliability for over a half century.

The PAK·RSK-J/H series (6AF～800AF) for general use and the CLK-J/H series (15AF～250AF) for specialized for low operation use, magnetic contactors & starters and also the TJ series thermal overload relays succeeded such a time-honored tradition are assured maximum satisfaction to customers in the world.

PRODUCTS CONFORMING TO RoHS DIRECTIVE

⚠ SAFETY PRECAUTION

FOR YOUR SAFETY, PLEASE BE SURE TO READ THE CHAPTER "HANDLING INSTRUCTIONS" IN THIS CATALOGUE AND PERTINENT HANDLING MANUALS ATTACHED TO PRODUCTS BEFORE USING.

Table of contents

1 Overview ..... Page 1
2 General purpose contactors PAK・RSK Series ..... Page 3
- Features and options ..... Page 3
- Selection table ..... Page 5
- Manufactured models and model explanation ..... Page 7
- Selection process ..... Page 8
- Main contact ratings ..... Page 9
- Auxiliary contact ratings ..... Page 10
- Operation coil ratings ..... Page 11
- Operation electromagnet ratings ..... Page 12
- Application of thermal overload relay for motors ..... Page 14
- Performance ..... Page 15
- Electrical life ..... Page 16
- Test condition and performance indication (Reference) ..... Page 17
- Application for motor ..... Page 18
- Application for capacitive load ..... Page 23
- Application for DC load ..... Page 24
- Protection coordination ..... Page 25
- Handling instructions ..... Page 26
- Dimensions and specifications for Non-reversing model ..... Page 29
- Dimensions and specifications for Reversing model ..... Page 45
- Dimensions and specifications for Magnetic starters with slow-trip thermal overload relays ..... Page 59
- Dimensions and specifications for Mechanical latch magnetic contactors ..... Page 61
- Dimensions and specifications for Magnetic relays ..... Page 67
- Dimensions and specifications for 4 poles contactors ..... Page 71

3 Thermal overload relays T, TJ Series ..... Page 73
- Selection table ..... Page 73
- Standard and Phase-Failure protection models ..... Page 75
- Fast-Trip models ..... Page 83
- Dimensions and specifications for Standard, Phase-Failure protection and Fast-Trip models ..... Page 84

4 Options ..... Page 87
- Auxiliary contact units ..... Page 87
- No-Loss latch units ..... Page 88
- Terminal covers ..... Page 89
- Terminal protection cover ..... Page 92
- Coil surge absorption unit ..... Page 93
- Din rail mounting adapters ..... Page 94
- Spare parts ..... Page 95

5 Star-Delta starters SDH-H Series ..... Page 96
6 Economical type contactors CLK Series ..... Page 103
- Selection table ..... Page 103
- Manufactured models and model explanation ..... Page 105
- Selection ..... Page 106
- Handling instructions ..... Page 109
- Dimensions and specifications ..... Page 112

7 Compatibility ..... Page 124
- General purpose contactors PAK Series ..... Page 124
- General purpose contactors RSK Series ..... Page 125
- Economical type contactors CLK Series ..... Page 126

8 Index ..... Page 127

Overview

1

Series		Page	Features	Description
PAK・RSK	Magnetic starters and contactors 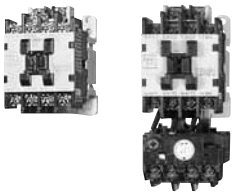	3	・Standardized Din rail mounting. ・Easy-read coil ratings. ・Fast, simple coil replacement. ・Improved reliability of auxiliary contact. ・Enhanced electrical life (AC3).	Standard model Reversing model Standard model with phase-failure protection thermal overload relays Reversing model with phase-failure protection thermal overload relays Standard model with 3-heaters thermal overload relays Reversing model with 3-heaters thermal overload relays Standard model with slow-trip thermal overload relays Standard model with mechanical latch Reversing model with mechanical latch
	Star-delta starters 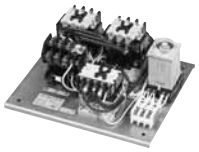	96		
				2 magnetic model 3 magnetic model
	Magnetic relays	67		
				Standard model
	Optional units 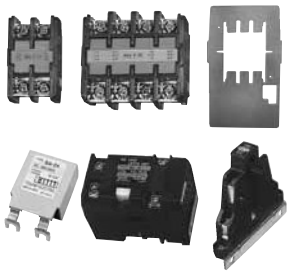	87		
			Various optional units enhance the functions of magnetic starters.	Auxiliary contact unit No-loss latch unit Terminal cover and terminal protection cover Coil surge absorption unit DIN rail mounting adapter Spare coil Main contact spring Base for TJ-18N Mechanical interlock unit set Connecting bar kit
CLK	Low operating cycle starters and contactors 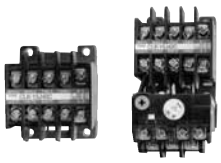	105		
			・Economical and downsized. ・Best for low operating cycle.	Magnetic Contactors Magnetic Starters with 2-heaters thermal overload relays Magnetic Starters with 3 heaters thermal overload relays Magnetic Starters with phase-failure protection thermal overload relays
T, TJ	Thermal overload relays 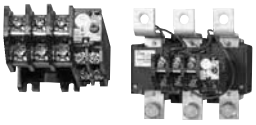	73		
			・Trip indicator. ・Automatic compensation for ambient temperature. ・One-touch selection of manual or automatic reset.	Standard model Phase-failure protection model 3-heaters model

Overview

Model																						
	Frame	6JC	11J	12J	20J	21J	26J	35J	50J	50H	65H	80H	95H	100H	125H	150H	220H	270H	300J	400J	600J	800J
	Rated capacity AC-3 at AC220V	2.2	3.7	4	7.5	7.5	10	15	18.5	18.5	22	25	27	37	45	60	80	90	90	115	160	(AC-2) 200
	Rated capacity AC-3 at AC440V	4	4.5	5.5	11	11	20	26	30	30	37	45	55	55	60	75	90	132	150	200	300	(AC-2) 400
PAK-□J(C) □JM(C) □JB(C) □H □HT(C) □HM(C) □HB		▬																				
RSK-□J □JT(C) □JM(C) □JB □H □HT(C) □HM(C) □HB			▬	▬	▬	▬	▬	▬	▬	▬	▬	▬	▬	▬	▬	▬	▬	▬	▬	▬		
PAK-□JGT(C) □JGM(C) □HGT(C) □HGM(C)		▬	▬	▬	▬	▬	▬	▬	▬	▬	▬	▬	▬	▬	▬	▬	▬	▬	▬	▬	▬	
RSK-□JGT(C) □JGM(C) □HGT(C) □HGM(C)			▬	▬	▬	▬	▬	▬	▬	▬	▬	▬	▬	▬	▬	▬	▬	▬		▬		
PAK-□JT □JM □HT □HM-3(C)		▬	▬	▬	▬	▬	▬	▬	▬	▬	▬	▬	▬	▬	▬	▬	▬	▬				
RSK-□JT □JM □HT □HM-3(C)			▬	▬	▬	▬	▬	▬	▬	▬	▬	▬	▬	▬	▬	▬	▬	▬				
PAK-□JT □JGT □HT □HGT-SL2(C)			▬	▬	▬	▬	▬	▬	▬	▬	▬	▬	▬	▬	▬	▬						
PAK-□JL						▬		▬				▬				▬	▬					
RSK-□JL						▬		▬				▬				▬	▬					
	Frame	25HTC	35HTC	50HTC	80HTC	100HTC	150HTC	220HTC	300HTC													
	Rated capacity AC-3 at AC220V	5.5	7.5	11	19	26	40	55	75													
	Rated capacity AC-3 at AC440V	5.5	11	19	26	37	55	90	150													
SDH-□		▬	▬	▬	▬	▬	▬	▬	▬													
SDH3-□		▬	▬	▬	▬	▬	▬	▬	▬													
	Contact configuration	4a	3a1b	2a2b	6a	5a1b	4a2b	3a3b	8a	7a1b	6a2b	5a3b	4a4b									
PAK-8JS□		▬	▬	▬	▬	▬	▬	▬	▬	▬	▬	▬	▬									
		Overview																				
HAU-□		For auxiliary contacts.																				
HL-B		For no-loss latch operation.																				
TC-□, C-□		For preventing terminal exposure.																				
SA-□		For absorbing surge.																				
D-5A		For DIN rail mounting.																				
SPARE COIL for □		For replacement coil.																				
MAIN CONTACT SPRING for □		For replacement from exhausted contacts.																				
BASE FOR TJ-18N for □		For individual use adapter of thermal overload relay (TJ-18N).																				
ML-□		For mechanical interlock.																				
CONNECTING BAR KIT for □		For Reversing contactors.																				
	Frame	15JC	20J	25J3	26J	28J	35J3	35J	40J	50J	65J	65H	80H	100H	125H	150H	200H	250H				
	Rated capacity AC-3 at AC220V	3	4	5.5	5.5	7.5	7.5	7.5	7.5	11	15	15	19	22	30	37	50	68				
	Rated capacity AC-3 at AC440V	4.5	5.5	7.5	7.5	11	11	11	15	19	30	30	37	40	55	60	80	90				
CLK-□		▬	▬	▬	▬	▬	▬	▬	▬	▬	▬	▬	▬	▬	▬	▬	▬	▬				
CLK-□T(C)		▬	▬	▬	▬	▬	▬	▬	▬	▬	▬	▬	▬	▬	▬	▬	▬	▬				
CLK-□GT(C)		▬	▬	▬	▬	▬	▬	▬	▬	▬	▬	▬	▬	▬	▬	▬	▬	▬				
CLK-□T-3(C)		▬	▬	▬	▬	▬	▬	▬	▬	▬	▬	▬	▬	▬	▬	▬	▬	▬				
	Frame	18JA	18	18N	35	50	125	220	400N	400	600											
	Rated current	0.2 ~ 15	0.2 ~ 26	0.2 ~ 26	0.2 ~ 65	12 ~ 100	34 ~ 230	65 ~ 360	170 ~ 600	110 ~ 440 (110 ~ 450)※	110 ~ 600	※Rated current in parentheses indicates for GT-400 model.										
T(J)-□		▬	▬	▬	▬	▬	▬	▬	▬	▬	▬											
GT(J)-□		▬	▬	▬	▬	▬	▬	▬	▬	▬	▬											
TJ-□-3		▬	▬	▬	▬	▬	▬	▬	▬													

2

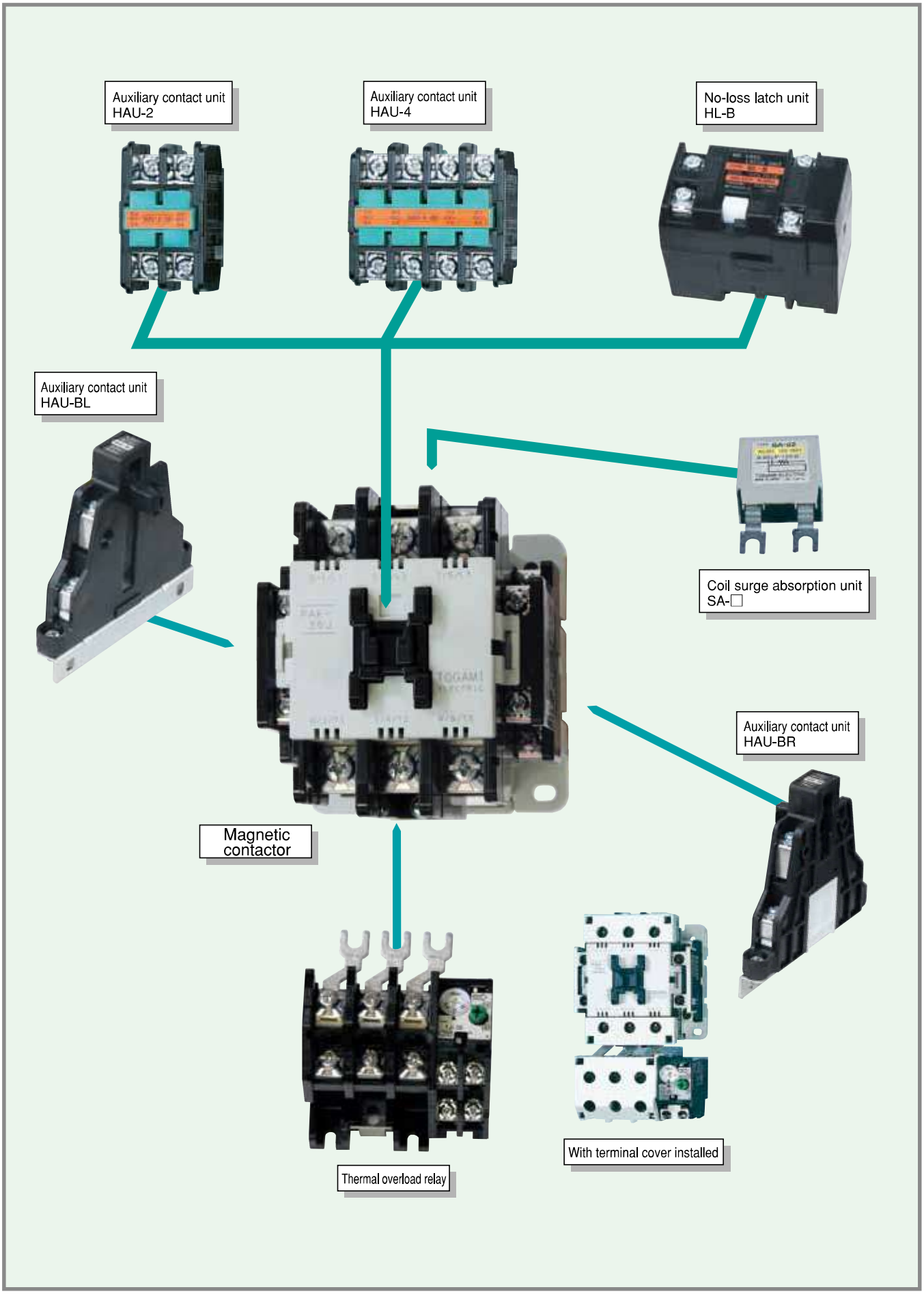
Auxiliary contact unit
HAU-2
Auxiliary contact unit
HAU-4
No-loss latch unit
HL-B
Auxiliary contact unit
HAU-BL
Coil surge absorption unit
SA-□
Auxiliary contact unit
HAU-BR
Magnetic
contactor
Thermal overload relay
With terminal cover installed

Features and options

Standardized rail mounting

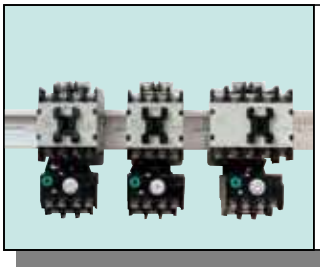

One-touch mounting on 35mm rails, complying with IEC and DIN standards.

(6JC~50J,TJ-18N)

Easy-read coil ratings

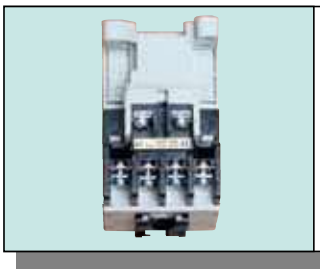

Coil ratings can be checked easily even after installation.

(6JC~50J)

Fast, simple coil replacement

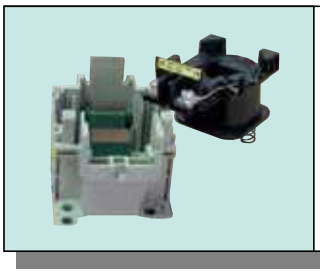

Screwless construction and cassette-type coils make swapping easier than ever.

(11J~21J)

Simple contact inspection and maintenance

Pop open the cover for simple contact inspection.

(11J~800J)

Improved reliability of auxiliary contact

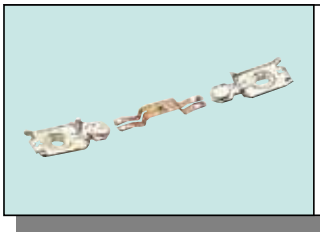

Can cope through DC24V10mA by the adoption of twin contact

(6JC~12J,21J~800J)

Electrical life extension (AC-3)

Realized longer life of 1 million operations
(11J~35J,50H~220H)

Conforming to national standards

CCC, CE, NK UL
RoHS Directive

Output contact of thermal overload relay is 1NO1NC

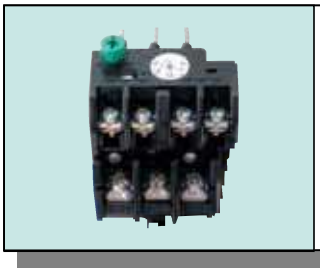

Output contact of 1NO1NC is electrically insulated each other.

(TJ-18~T-600)

OPTIONS

Auxiliary contact unit (head on)

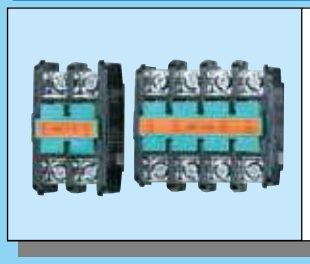

Twin-contact design auxiliary contact units can be snapped on and off with one-touch.
(11J~95H)

Auxiliary contact units (side on)

Quick mounting of twin-contact design auxiliary contact units.

(100H~270H)

Terminal cover

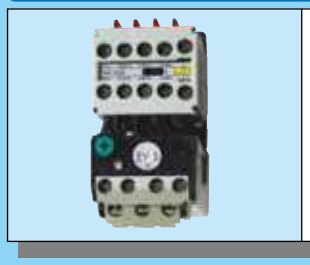

Prevents terminal exposure, improves safety (compliant with VDE0106 Teil100).
(6JC~50J)

Terminal protection cover

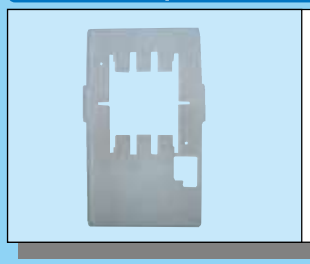

Prevents terminal exposure, improves safety.

(50H~800J)

Coil surge absorption unit

In order to protect the electronic circuit the serge voltage generated from a coil is suppressed.
(11J~50J)
PAK-50H~800J incorporate the Surge absorption function.

Selection table

Series				J Series							
Frame				6JC	11J	12J	20J	21J	26J	35J	50J
Model type	Magnetic contactor (open type)		Non-reversing	PAK-6JC	PAK-11J	PAK-12J	PAK-20J	PAK-21J	PAK-26J	PAK-35J	PAK-50J
			Reversing	–	RSK-11J	RSK-12J⑬	RSK-20J⑬	RSK-21J⑬	RSK-26J⑬	RSK-35J⑬	RSK-50J⑬
	Magnetic starter, standard type (With 2-heaters thermal overload relay)	Open type	Non reversing	PAK-6JTC	PAK-11JTC	PAK-12JTC	PAK-20JTC	PAK-21JTC	PAK-26JTC	PAK-35JTC	PAK-50JT
			Reversing	–	RSK-11JTC	RSK-12JTC⑬	RSK-20JTC⑬	RSK-21JTC⑬	RSK-26JTC⑬	RSK-35JTC⑬	RSK-50JT⑬
		Enclosed type	Non reversing	PAK-6JMC	PAK-11JMC	PAK-12JMC	PAK-20JMC	PAK-21JMC	PAK-26JMC	PAK-35JMC	PAK-50JM
			Reversing	–	RSK-11JMC	RSK-12JMC⑬	RSK-20JMC⑬	RSK-21JMC⑬	RSK-26JMC⑬	RSK-35JMC⑬	RSK-50JM⑬
		Thermal overload relay		TJ-18JA	TJ-18	TJ-18	TJ-18	TJ-18	TJ-35	TJ-35	TJ-35
	Magnetic starter (With phase-failure protection thermal overload relay)	Open type	Non reversing	PAK-6JGTC	PAK-11JGTC	PAK-12JGTC	PAK-20JGTC	PAK-21JGTC	PAK-26JGTC	PAK-35JGTC	PAK-50JGT
			Reversing	–	RSK-11JGTC	RSK-12JGTC⑬	RSK-20JGTC⑬	RSK-21JGTC⑬	RSK-26JGTC⑬	RSK-35JGTC⑬	RSK-50JGT⑬
		Enclosed type	Non reversing	PAK-6JGMC	PAK-11JGMC	PAK-12JGMC	PAK-20JGMC	PAK-21JGMC	PAK-26JGMC	PAK-35JGMC	PAK-50JGM
			Reversing	–	RSK-11JGMC	RSK-12JGMC⑬	RSK-20JGMC⑬	RSK-21JGMC⑬	RSK-26JGMC⑬	RSK-35JGMC⑬	RSK-50JGM⑬
		Thermal overload relay		GTJ-18JA	GTJ-18	GTJ-18	GTJ-18	GTJ-18	GTJ-35	GTJ-35	GTJ-35
	Magnetic starter (With 3-heaters thermal overload relay)	Open type	Non reversing	PAK-6JT-3C	PAK-11JT-3C	PAK-12JT-3C	PAK-20JT-3C	PAK-21JT-3C	PAK-26JT-3C	PAK-35JT-3C	PAK-50JT-3
			Reversing	–	RSK-11JT-3C	RSK-12JT-3C⑬	RSK-20JT-3C⑬	RSK-21JT-3C⑬	RSK-26JT-3C⑬	RSK-35JT-3C⑬	RSK-50JT-3⑬
		Enclosed type	Non reversing	PAK-6JM-3C	PAK-11JM-3C	PAK-12JM-3C	PAK-20JM-3C	PAK-21JM-3C	PAK-26JM-3C	PAK-35JM-3C	PAK-50JM-3
			Reversing	–	RSK-11JM-3C	RSK-12JM-3C⑬	RSK-20JM-3C⑬	RSK-21JM-3C⑬	RSK-26JM-3C⑬	RSK-35JM-3C⑬	RSK-50JM-3⑬
		Combination of thermal overload relay		TJ-18JA-3	TJ-18-3	TJ-18-3	TJ-18-3	TJ-18-3	TJ-35-3	TJ-35-3	TJ-35-3
Ratings	AC-3: 3-phase squirrel-cage motor		200-240V	2.2kW/8.7A	3.7kW/13.5A	4kW/15A	7.5kW/27A	7.5kW/27A	10kW/35A	15kW/52A	18.5kW/65A
			380-440V	4kW/7.9A	4.5kW/9.5A	5.5kW/11.5A	11kW/22A	11kW/22A	20kW/35A	26kW/45A	30kW/62A
			500-550V	4kW/6.3A	4.5kW/7.6A	5.5kW/9.2A	11kW/18A	11kW/18A	20kW/28A	26kW/36A	30kW/45A
	AC-3: Single-phase motor		100-110V	0.4kW/7.2A	0.75kW/13.5A	0.9kW/17A	1.5kW/27A	1.5kW/27A	2kW/35A	3kW/52A	–
			200-240V	0.75kW/6.8A	1.5kW/13.5A	1.8kW/17A	3kW/27A	3kW/27A	4kW/35A	6kW/52A	–
	AC-1: Resistance load (500,000 ops)		200-240V	15A	20A	26A	32A	32A	50A	60A	65A
			380-440V	15A	20A	26A	32A	32A	50A	60A	65A
			500-550V	15A	20A	26A	32A	32A	50A	60A	65A
	AC-4: Inching/plugging (30,000 ops)		200-240V	1.1kW	2.2kW	3.7kW	4kW	5.5kW	7.5kW	10kW	10kW
			380-440V	1.5kW	3.7kW	4.5kW	5.5kW	7.5kW	11kW	20kW	20kW
			500-550V	1.5kW	3.7kW	4.5kW	5.5kW	7.5kW	11kW	20kW	20kW
	Rated thermal current (A)			15A	20A	26A	32A	32A	50A	60A	65A
Performance	IEC 60947-4-1			AC-3	AC-3	AC-3	AC-3	AC-3	AC-3	AC-3	AC-3
	Mechanical life($\times 10^6$ ops)			2.5	5	5	5	5	5	5	5
	Electrical life($\times 10^6$ ops)			0.5	1	1	1	1	1	1	0.5
	Switching frq. (ops/hour)			1200	1200	1200	1200	1200	1200	1200	1200
Auxiliary contacts	Contact configuration ①	Standard	Non reversing	1NO(1NC)	1NO(1NC)	1NO(1NC)	1NO(1NC)	1NO1NC (2NO、2NC)	2NO2NC	2NO2NC	2NO2NC
			Reversing⑬	–	1NC×2	1NO1NC×2	1NO1NC×2	1NO2NC×2	2NO3NC×2	2NO3NC×2	2NO3NC×2
		Option maximum config.	Non reversing	–	3NO2NC	3NO2NC	3NO2NC	3NO3NC	4NO4NC	4NO4NC	4NO4NC
			Reversing	–	2NO3NC×2	3NO3NC×2	3NO3NC×2	3NO4NC×2	4NO5NC×2	4NO5NC×2	4NO5NC×2
	Rated operational current AC-15		100-110V	3A	10A	10A	28A	10A	10A	10A	10A
			200-240V	2A	6A	6A	20A	6A	6A	6A	6A
			380-440V	1.5A	3A	3A	14A	3A	3A	3A	3A
	Rated thermal current			10A	10A	10A	32A	10A	10A	10A	10A
Thermal overload relays	Rated current (3-point set current scale) ②(A)			0.28 – 0.35 – 0.42 0.4 – 0.5 – 0.6 0.56 – 0.7 – 0.84 0.64 – 0.8 – 0.96 0.8 – 1 – 1.2 1 – 1.2 – 1.4 1.2 – 1.4 – 1.6 1.4 – 1.8 – 2.2 1.8 – 2.3 – 2.8 2.4 – 3 – 3.6 2.9 – 3.6 – 4.3 3.7 – 4.6 – 5.5 4 – 5 – 6 5.4 – 6.7 – 8 6 – 7.5 – 9 7.4 – 9.2 – 11	0.28 – 0.35 – 0.42 0.4 – 0.5 – 0.6 0.56 – 0.7 – 0.84 0.64 – 0.8 – 0.96 0.8 – 1 – 1.2 1 – 1.2 – 1.4 1.2 – 1.4 – 1.6 1.4 – 1.8 – 2.2 1.8 – 2.3 – 2.8 2.4 – 3 – 3.6 2.9 – 3.6 – 4.3 3.7 – 4.6 – 5.5 4 – 5 – 6 5.4 – 6.7 – 8 6 – 7.5 – 9 7.4 – 9.2 – 11 8.8 – 11 – 13	0.28 – 0.35 – 0.42 0.4 – 0.5 – 0.6 0.56 – 0.7 – 0.84 0.64 – 0.8 – 0.96 0.8 – 1 – 1.2 1 – 1.2 – 1.4 1.2 – 1.4 – 1.6 1.4 – 1.8 – 2.2 1.8 – 2.3 – 2.8 2.4 – 3 – 3.6 2.9 – 3.6 – 4.3 3.7 – 4.6 – 5.5 4 – 5 – 6 5.4 – 6.7 – 8 6 – 7.5 – 9 7.4 – 9.2 – 11 8.8 – 11 – 13 11 – 13 – 15	0.28 – 0.35 – 0.42 0.4 – 0.5 – 0.6 0.56 – 0.7 – 0.84 0.64 – 0.8 – 0.96 0.8 – 1 – 1.2 1 – 1.2 – 1.4 1.2 – 1.4 – 1.6 1.4 – 1.8 – 2.2 1.8 – 2.3 – 2.8 2.4 – 3 – 3.6 2.9 – 3.6 – 4.3	3.7 – 4.6 – 5.5 4 – 5 – 6 5.4 – 6.7 – 8 6 – 7.5 – 9 7.4 – 9.2 – 11 8.8 – 11 – 13 11 – 13 – 15 12 – 15 – 18 15 – 18 – 20 18 – 22 – 26	7.4 – 9.2 – 11 8.8 – 11 – 13 11 – 13 – 15 12 – 15 – 18 15 – 18 – 20 18 – 22 – 26 21 – 26 – 31 24 – 30 – 36 28 – 34 – 42 34 – 42 – 48	7.4 – 9.2 – 11 8.8 – 11 – 13 11 – 13 – 15 12 – 15 – 18 15 – 18 – 20 18 – 22 – 26 21 – 26 – 31 24 – 30 – 36 28 – 34 – 42 34 – 42 – 48 40 – 48 – 52	7.4 – 9.2 – 11 8.8 – 11 – 13 11 – 13 – 15 12 – 15 – 18 15 – 18 – 20 18 – 22 – 26 21 – 26 – 31 24 – 30 – 36 28 – 34 – 42 34 – 42 – 48 40 – 48 – 52 46 – 56 – 65
	Heater elements(STANDARD)			2	2	2	2	2	2	2	2
	Reset type			Manual/Auto	Manual/Auto	Manual/Auto	Manual/Auto	Manual/Auto	Manual/Auto	Manual/Auto	Manual/Auto
	Manual trip			○	○	○	○	○	○	○	○
	Output contact configuration			1 NO1 NC	1 NO1 NC	1 NO1 NC	1 NO1 NC	1 NO1 NC	1 NO1 NC	1 NO1 NC	1 NO1 NC
DIN rail mounting				○	○	○	○	○	○	○	○
Auxiliary twin contacts				○	○	○	–	○	○	○	○
Options	Auxiliary contact unit 2P			–	HAU-2	HAU-2	HAU-2	HAU-2	HAU-2	HAU-2	HAU-2
	Auxiliary contact unit 4P			–	HAU-4	HAU-4	HAU-4	HAU-4	HAU-4	HAU-4	HAU-4
	Terminal (protective) cover			C-21/TC-22③	C-11/TC-22③	C-11/TC-22③	C-12/TC-22③	C-13/TC-22③	C-14/TC-25③	C-14/TC-25③	C-14/TC-25③
	Coil surge absorption unit⑤			–	SA-22/24				SA-32/34		
	DIN rail mounting adapter⑨			–	–	–	–	–	–	–	–

Notes. ①In case of addition HAU-4-22 (2NO+2NC) to the standard auxiliary contact configuration of magnetic contactor.
②The rated current of thermal overload relay, must be selected less than rated operational current (AC-3)of magnetic contactor.
③Type name of left side shows for magnetic contactor, and right side for themal overload relay.
(For Reversing type, please refer to P90.)
④Type name of left side shows for magnetic contactor, and right side for magnetic starter.
⑤The Type name of coil serge absorption unit changes with the rated values of operation voltage.
Please refer to P93. Moreover, PAK-50H~800J incorporate the surge absorption function.
⑥HAU-BL is designed for installation on left side of contactor, and HAU-BR on right.

H Series									J Series			
50H	65H	80H	95H	100H	125H	150H	220H	270H	300J⑩	400J⑩	600J⑩	800J⑪
PAK-50H	PAK-65H	PAK-80H	PAK-95H	PAK-100H	PAK-125H	PAK-150H	PAK-220H	PAK-270H	PAK-300J	PAK-400J	PAK-600J	PAK-800J
RSK-50H	RSK-65H	RSK-80H	RSK-95H	RSK-100H	RSK-125H	RSK-150H	RSK-220H	RSK-270H	RSK-300J	RSK-400J	–	–
PAK-50HTC	PAK-65HTC	PAK-80HTC	PAK-95HT	PAK-100HTC	PAK-125HTC	PAK-150HTC	PAK-220HTC	PAK-270HT	PAK-300JT	PAK-400JT	PAK-600JT	–
RSK-50HTC	RSK-65HTC	RSK-80HTC	RSK-95HT	RSK-100HTC	RSK-125HTC	RSK-150HTC	RSK-220HTC	RSK-270HT	RSK-300JT	RSK-400JT	–	–
PAK-50HMC	PAK-65HMC	PAK-80HMC	PAK-95HM	PAK-100HMC	PAK-125HMC	PAK-150HMC	PAK-220HMC	PAK-270HM	–	–	–	–
RSK-50HMC	RSK-65HMC	RSK-80HMC	RSK-95HM	RSK-100HMC	RSK-125HMC	RSK-150HMC	RSK-220HMC	RSK-270HM	–	–	–	–
TJ-50	TJ-50	TJ-50	TJ-50	TJ-125	TJ-125	TJ-125	T J-220⑦	T J-220⑦	T-400⑧	T-400⑧	T-600⑧	–
PAK-50HGTC	PAK-65HGTC	PAK-80HGTC	PAK-95HGT	PAK-100HGTC	PAK-125HGTC	PAK-150HGTC	PAK-220HGTC	PAK-270HGT	PAK-300JGT	PAK-400JGT	PAK-600JGT	–
RSK-50HGTC	RSK-65HGTC	RSK-80HGTC	RSK-95HGT	RSK-100HGTC	RSK-125HGTC	RSK-150HGTC	RSK-220HGTC	RSK-270HGT	RSK-300JGT	RSK-400JGT	–	–
PAK-50HGMC	PAK-65HGMC	PAK-80HGMC	PAK-95HGM	PAK-100HGMC	PAK-125HGMC	PAK-150HGMC	PAK-220HGMC	PAK-270HGM	–	–	–	–
RSK-50HGMC	RSK-65HGMC	RSK-80HGMC	RSK-95HGM	RSK-100HGMC	RSK-125HGMC	RSK-150HGMC	RSK-220HGMC	RSK-270HGM	–	–	–	–
GTJ-50	GTJ-50	GTJ-50	GTJ-50	GTJ-125	GTJ-125	GTJ-125	GTJ-220⑦	GTJ-220⑦	GT-400⑧	GT-400⑧	GT-600⑧	–
PAK-50HT-3C	PAK-65HT-3C	PAK-80HT-3C	PAK-95HT-3	PAK-100HT-3C	PAK-125HT-3C	PAK-150HT-3C	PAK-220HT-3C	PAK-270HT-3	–	–	–	–
RSK-50HT-3C	RSK-65HT-3C	RSK-80HT-3C	RSK-95HT-3	RSK-100HT-3C	RSK-125HT-3C	RSK-150HT-3C	RSK-220HT-3C	RSK-270HT-3	–	–	–	–
PAK-50HM-3C	PAK-65HM-3C	PAK-80HM-3C	PAK-95HM-3	PAK-100HM-3C	PAK-125HM-3C	PAK-150HM-3C	PAK-220HM-3C	PAK-270HM-3	–	–	–	–
RSK-50HM-3C	RSK-65HM-3C	RSK-80HM-3C	RSK-95HM-3	RSK-100HM-3C	RSK-125HM-3C	RSK-150HM-3C	RSK-220HM-3C	RSK-270HM-3	–	–	–	–
TJ-50-3	TJ-50-3	TJ-50-3	TJ-50-3	TJ-125-3	TJ-125-3	TJ-125-3	TJ-220-3⑦	TJ-220-3⑦	–	–	–	–
18.5kW/65A	22kW/80A	25kW/90A	27kW/110A	37kW/125A	45kW/150A	60kW/200A	80kW/275A	90kW/310A	90kW/300A	115kW/400A	160kW/600A	(AC-2) 200kW/800A
30kW/62A	37kW/75A	45kW/90A	55kW/110A	55kW/110A	60kW/125A	75kW/150A	90kW/180A	132kW/265A	150kW/300A	200kW/400A	300kW/600A	(AC-2) 400kW/800A
30kW/45A	37kW/60A	45kW/72A	55kW/90A	55kW/90A	70kW/110A	75kW/120A	90kW/150A	132kW/200A	160kW/250A	200kW/350A	300kW/500A	–
–	–	–	–	–	–	–	–	–	–	–	–	–
–	–	–	–	–	–	–	–	–	–	–	–	–
75A	90A	110A	110A	150A	170A	220A	275A	310A	350A	420A	600A	800A⑫
75A	90A	110A	110A	150A	170A	220A	275A	310A	350A	420A	600A	800A⑫
75A	90A	110A	110A	150A	170A	220A	275A	310A	–	–	–	–
7.5kW	11kW	15kW	19kW	19kW	25kW	30kW	45kW	55kW	55kW	75kW	90kW	–
15kW	22kW	30kW	37kW	37kW	45kW	55kW	75kW	80kW	95kW	110kW	150kW	–
15kW	22kW	30kW	37kW	37kW	45kW	55kW	75kW	80kW	–	–	–	–
75A	90A	110A	110A	150A	170A	220A	275A	310A	350A	420A	600A	800A
AC-3	AC-3	AC-3	AC-3	AC-3	AC-3	AC-3	AC-3	AC-3	AC-3	AC-3	AC-3	AC-2
5	5	5	5	5	5	5	5	5	5	5	5	1
1	1	1	1	1	1	1	1	0.5	0.5	0.5	0.5	0.1
1200	1200	1200	1200	1200	1200	1200	1200	1200	1200	1200	1200	1200
2NO2NC	2NO2NC	2NO2NC	2NO2NC	2NO2NC	2NO2NC	2NO2NC	2NO2NC	2NO2NC	3NO3NC	3NO3NC	4NO4NC	4NO4NC
2NO2NC×2	2NO2NC×2	2NO2NC×2	2NO2NC×2	2NO2NC×2	2NO2NC×2	2NO2NC×2	2NO2NC×2	2NO2NC×2	3NO3NC×2	3NO3NC×2	–	–
4NO4NC	4NO4NC	4NO4NC	4NO4NC	4NO4NC	4NO4NC	4NO4NC	4NO4NC	4NO4NC	–	–	–	–
4NO4NC×2	4NO4NC×2	4NO4NC×2	4NO4NC×2	–	–	–	–	–	–	–	–	–
10A	10A	10A	10A	10A	10A	10A	10A	10A	2A	2A	2A	2A
6A	6A	6A	6A	6A	6A	6A	6A	6A	2A	2A	2A	2A
3A	3A	3A	3A	3A	3A	3A	3A	3A	1A	1A	1A	1A
10A	10A	10A	10A	10A	10A	10A	10A	10A	10A	10A	10A	10A
12 – 15 – 18 18 – 22 – 26 21 – 26 – 31 24 – 30 – 36 28 – 34 – 42 34 – 42 – 48 40 – 48 – 58 46 – 56 – 64 56 – 68 – 80	12 – 15 – 18 18 – 22 – 26 21 – 26 – 31 24 – 30 – 36 28 – 34 – 42 34 – 42 – 48 40 – 48 – 58 46 – 56 – 64 56 – 68 – 80 68 – 80 – 94	12 – 15 – 18 18 – 22 – 26 21 – 26 – 31 24 – 30 – 36 28 – 34 – 42 34 – 42 – 48 40 – 48 – 58 46 – 56 – 64 56 – 68 – 80 68 – 80 – 94 76 – 90 – 100		34 – 42 – 48 40 – 48 – 58 46 – 56 – 64 56 – 68 – 80 68 – 80 – 94 76 – 90 – 100 85 – 105 – 125 110 – 130 – 150	34 – 42 – 48 40 – 48 – 58 46 – 56 – 64 56 – 68 – 80 68 – 80 – 94 76 – 90 – 100 85 – 105 – 125 110 – 130 – 150 130 – 160 – 190	34 – 42 – 48 40 – 48 – 58 46 – 56 – 64 56 – 68 – 80 68 – 80 – 94 76 – 90 – 100 85 – 105 – 125 110 – 130 – 150 130 – 160 – 190 170 – 200 – 230	65 – 80 – 95 85 – 105 – 125 105 – 130 – 150 130 – 160 – 190 150 – 190 – 230 185 – 230 – 275 215 – 270 – 325	65 – 80 – 95 85 – 105 – 125 105 – 130 – 150 130 – 160 – 190 150 – 190 – 230 185 – 230 – 275 215 – 270 – 325 265 – 330 – 400	OPEN-PHASE MODEL 110 – 140 – 180 170 – 240 – 290 280 – 380 – 440 STANDARD MODEL 110 – 140 – 170 140 – 180 – 220 200 – 240 – 280 240 – 300 – 360	110 – 140 – 180 170 – 240 – 290 280 – 380 – 440 110 – 140 – 170 140 – 180 – 220 200 – 240 – 280 240 – 300 – 360 300 – 380 – 450	110 – 140 – 180 170 – 240 – 290 280 – 380 – 440 400 – 500 – 600 110 – 140 – 170 140 – 180 – 220 200 – 240 – 280 240 – 300 – 360 300 – 380 – 450 400 – 500 – 600	–
2	2	2	2	2	2	2	2	2	2	2	2	–
Manual/Auto	Manual/Auto	Manual/Auto	Manual/Auto	Manual/Auto	Manual/Auto	Manual/Auto	Manual/Auto	Manual/Auto	Manual/Auto	Manual/Auto	Manual/Auto	–
○	○	○	○	○	○	○	○	○	○	○	○	–
1 NO1 NC	1 NO1 NC	1 NO1 NC	1 NO1 NC	1 NO1 NC	1 NO1 NC	1 NO1 NC	1 NO1 NC	1 NO1 NC	1NO1NC	1NO1NC	1NO1NC	–
Adapters are necessary				–	–	–	–	–	–	–	–	–
○	○	○	○	○	○	○	○	○	○	○	○	○
HAU-2	HAU-2	HAU-2	HAU-2	–					–			–
HAU-4	HAU-4	HAU-4	HAU-4	HAU-BL+HAU-BR⑥					–			–
C-4/TC-4④	C-4/TC-4④	C-4/TC-4④	C-4/TC-4④	C-5/TC-5A④	C-5/TC-5A④	C-6/TC-6A④	C-6/TC-7A④	C-6/TC-7A④	C-8/TC-8④	C-8/TC-8④	C-9/TC-9④	C-9/ – ④
–									–			
D - 5 A				–					–			

⑦TJ-220 is the combination of TJ-35C and CT contained in molded case.
⑧T-400 and T-600 are the combination of T-21 and CT.
⑨PAK-6JC through 50J are not required any adapters.
⑩Magnetic starters with 3-heaters thermal overload relay of 300J to 600J frame are not manufactured.
⑪Magnetic starter of 800J frame is not manufactured.
⑫Electric durability of AC-1 rating for PAK-800J is 100,000 operations.
⑬LO1, LO2, RO1, RO2 are contacts for exclusive use of electrical interlock.

Manufactured models and model explanation

Manufactured models

Series name			J Series								H Series									J Series			
Frame			6JC	11J	12J	20J	21J	26J	35J	50J	50H	65H	80H	95H	100H	125H	150H	220H	270H	300J	400J	600J	800J
3-phase squirrel-cage induction motor (AC-3 class) 3-phase wound rotor induction motor (AC-2 class) (kW)		240V	2.2	3.7	4	7.5	7.5	10	15	18.5	18.5	22	25	27	37	45	60	80	90	90	115	160	(AC-2) 200
		440V	4	4.5	5.5	11	11	20	26	30	30	37	45	55	55	60	75	90	132	150	200	300	(AC-2) 400
		550V	4	4.5	5.5	11	11	20	26	30	30	37	45	55	55	70	75	90	132	160	200	300	—
Contact configuration ( ) indicates data to be specified		Main contact	3NO				3NO	3NO												3NO		3NO	
		Auxiliary contact	1NO(1NC)				1NO1NC (2NO·2NC)	2NO2NC												3NO3NC		4NO4NC	
Magnetic starters / Open type	Non-reversing model	PAK-□T(C)	◎	◎	◎	◎	◎	◎	◎	◎	◎	◎	◎	◎	◎	◎	◎	◎	◎	◎	◎	◎	—
	Reversing model	RSK-□T(C)	—	◎	◎	◎	◎	◎	◎	◎	◎	◎	◎	◎	◎	◎	◎	◎	◎	◎	◎	—	—
	With 3-heaters thermal overload relay	PAK-□T-3(C)	○	○	○	○	○	○	○	○	○	○	○	○	○	○	○	○	○	—	—	—	—
	With phase-failure protection thermal overload relay	PAK-□GT(C)	○	○	○	○	○	○	○	○	○	○	○	○	○	○	○	○	○	○	○	○	—
	DIN rail mount model	PAK-□T-DN(C)	DIN mounting standard in 6JTC to 50JT								○①	○①	○①	○①	—	—	—	—	—	—	—	—	—
	With slow-trip thermal overload relay	PAK-□T-SL2(C)	—	○	○	○	○	○	○	○	○	○	○	○	○	○	○	—	—	—	—	—	—
	With fast-trip thermal overload relay	PAK-□T-F(C)	○	○	○	○	○	○	○	○	○	○	○	○	○	○	○	—	—	—	—	—	—
Magnetic starters / Enclosed type	Non-reversing model	PAK-□M(C)	◎	◎	◎	◎	◎	◎	◎	◎	◎	◎	◎	◎	◎	◎	◎	◎	◎	—	—	—	—
	Reversing model	RSK-□M(C)	—	◎	◎	◎	◎	◎	◎	◎	◎	◎	◎	◎	◎	◎	◎	◎	◎	—	—	—	—
	With 3-heaters thermal overload relay	PAK-□M-3(C)	○	○	○	○	○	○	○	○	○	○	○	○	○	○	○	○	○	—	—	—	—
	With phase-failure protection thermal overload relay	PAK-□GM(C)	○	○	○	○	○	○	○	○	○	○	○	○	○	○	○	○	○	—	—	—	—
	With ammeter	PAK-□M-A(C)	△	△	△	△	△	△	△	△	△	△	△	△	△	△	△	△	△	—	—	—	—
	With push button	PAK-□M-D(C)	△	△	△	△	△	△	△	△	△	△	△	△	△	△	△	△	△	—	—	—	—
	With slow-trip thermal overload relay	PAK-□M-SL2(C)	—	△	△	△	△	△	△	△	△	△	△	△	△	△	△	—	—	—	—	—	—
	With fast-trip thermal overload relay	PAK-□M-F(C)	○	○	○	○	○	○	○	○	○	○	○	○	○	○	○	—	—	—	—	—	—
Magnetic contactors / Open type	Non-reversing model	PAK-□	◎	◎	◎	◎	◎	◎	◎	◎	◎	◎	◎	◎	◎	◎	◎	◎	◎	◎	◎	◎	◎
	Reversing model	RSK-□	—	◎	◎	◎	◎	◎	◎	◎	◎	◎	◎	◎	◎	◎	◎	◎	◎	◎	◎	—	—
	DC-operated model	PAK-□DCC	○	—	—	—	—	—	—	—	—	—	—	—	—	—	—	—	—	—	—	—	—
	DIN rail mount model	PAK-□-DN	DIN mounting standard in 6JC to 50J								○①	○①	○①	○①	—	—	—	—	—	—	—	—	—
	Mechanical latch model: Non-reversing model	PAK-□L	—	—	—	—	△	—	△	—	—	—	△	—	—	—	△	△	—	—	—	—	—
	Mechanical latch model: Reversing model	RSK-□L																					
Magnetic contactors / Enclosed type	Non-reversing model	PAK-□B(C)	○	○	○	○	○	○	○	○	○	○	○	○	○	○	○	○	○	—	—	—	—
	Reversing model	RSK-□B	—	○	○	○	○	○	○	○	○	○	○	○	○	○	○	○	○	—	—	—	—

Note. ①Can be DIN-mountable with rail adapter.

Symbols used
(1) ◎ Standard models, with AC100-110V or AC200-220V coil.
(2) ○ Semi-standard models (ask for delivery schedule).
(3) △ Models manufactured to order (ask for delivery schedule).
(4) — Not manufactured.

Model explanation

PAK — 20 JT 20 — 3 A C

Type
PAK···Standard model
RSK···Reversing model

Model
PAK-□
RSK-□

J		H	
6	300	50	270
11	400	65	
12	600	80	
20	800	95	
21		100	
26		125	
35		150	
50		220	

※Reversing models available for 11J to 400J.

Specifications

PAK-J	PAK-H
J ····· Magnetic contactor①②	H ····· Magnetic contactor②
JT ····· Magnetic starter②	HT ····· Magnetic starter②
JM ····· Magnetic starter③	HM ····· Magnetic starter③
JB ····· Magnetic contactor③	HB ····· Magnetic contactor③
JGT ····· Magnetic starter with phase-failure protection thermal overload relay②	HGT ····· Magnetic starter with open phase thermal overload relay②
JGM ····· Magnetic starter with phase-failure protection thermal overload relay③	HGM ····· Magnetic starter with open phase thermal overload relay③
JDCC ····· DC-operated magnetic contactor②	HUL ····· UL-certified magnetic contactor②
JUL ····· UL-certified magnetic contactor②	HL ····· Mechanical latch magnetic contactor②
JL ····· Mechanical latch magnetic contactor②	

Notes. ①Only PAK-6J accompanies "C" at the end of model name.
②Open type
③Enclosed type

Auxiliary contact configuration
PAK-6JC, 11J 12J, 20J
Blank·····1NO
31·····1NC
PAK-21J
Blank·····1NO1NC
20·····2NO
02·····2NC
PAK-26J～270H
Blank·····2NO2NC
PAK-300, 400J
Blank·····3NO3NC
PAK-600, 800J
Blank·····4NO4NC

Thermal
3 ··· Thermal overload relay with 3 heaters
SL2 ··· With slow-trip thermal overload relay
F ··· With fast-trip thermal overload relay

Options
A ··· Ammeter
D ··· Push button
R ··· External reset button
DN ··· DIN rail mount model

Notes. Only with enclosure

Career mark
Only for magnetic starters. However, except for 50J, 95H, 270H, 300J～600J models.

Selection process

Selection process

Main contact capacity	Load type	Motor	· Standard application for 3-phase squirrel-cage induction motor and single-phase motor	Page 9
		Resistive load	· Standard application for resistive load	Page 9
		Capacitive load	· Application for single-phase and 3-phase capacitive circuits	Page 23
Motor operation	Starting method	Direct starting	· Standard application for 3-phase squirrel-cage induction motor and single-phase motor	Page 9
		Inching and plugging	· Application for inching and plugging	Page 19
		Reversing operation	· Reversing magnetic contactors and starters	Page 45
		Star-delta starting	· Standard application for Star-Delta starters · Automatic star-delta starter	Page 20 Page 96
Required durability		Electrical life	· Electrical life curve · Direct-starting operation with consideration of electrical life	Page 15,16
		Mechanical life	· Performance	Page 15
Auxiliary contacts		Configuration	· Auxiliary contact specifications	Page 5,10
Control circuit	Operating coil	Coil voltage and frequency	Operating coil ratings	Page 11
Operating environment		Installation environment	· Standard service conditions	Page 26
Selection of thermal overload relay	Heater capacity selection, according to motor capacity	Motor capacity	· Standard application of thermal overload relays for motors	Page 14
	Starting time	Short (application for submerged pump compressor)	· Magnetic starter with fast-trip thermal overload relay	
		Long (application for fans and blowers)	· Magnetic starter with slow-trip thermal overload relay	Page 59
	Protection	Overload and lock protection	· Standard magnetic starter · Magnetic starter with 3-heaters thermal overload relay	Page 30 Page 30
		Phase-failure protection	· Magnetic starter with phase-failure protection thermal overload relay	Page 30

Main contact ratings

Conforming to IEC

Use for / Frame	3-phase squirrel-cage induction motor (AC-3)			3-phase wound induction motor (AC-2)			Single-phase motor (AC-3)				Resistive (AC-1)		Rated thermal current [A]
	Rated capacity [kW]			Rated operational current [A]			Rated capacity [kW]		Rated operational current [A]		Rated operational current [A]		
	200~240V	380~440V	500~550V	200~240V	380~440V	500~550V	100~110V	200~240V	100~110V	200~240V	200~240V	380~440V	
6JC	2.2	4	4	8.7	7.9	6.3	0.4	0.75	7.2	6.8	15	15	15
11J	3.7	4.5	4.5	13.5	9.5	7.6	0.75	1.5	13.5	13.5	20	20	20
12J	4	5.5	5.5	15	11.5	9.2	0.9	1.8	17	17	26	26	26
20J	7.5	11	11	27	22	18	1.5	3	27	27	32	32	32
21J	7.5	11	11	27	22	18	1.5	3	27	27	32	32	32
26J	10	20	20	35	35	28	2	4	35	35	50	50	50
35J	15	26	26	52	45	36	3	6	52	52	60	60	60
50J	18.5	30	30	65	62	45	–	–	–	–	65	65	65
50H	18.5	30	30	65	62	45	–	–	–	–	75	75	75
65H	22	37	37	80	75	60	–	–	–	–	90	90	90
80H	25	45	45	90	90	72	–	–	–	–	110	110	110
95H	27	55	55	110	110	90	–	–	–	–	110	110	110
100H	37	55	55	125	110	90	–	–	–	–	150	150	150
125H	45	60	70	150	125	110	–	–	–	–	170	170	170
150H	60	75	75	200	150	120	–	–	–	–	220	220	220
220H	80	90	90	275	180	150	–	–	–	–	275	275	275
270H	90	132	132	310	265	250	–	–	–	–	310	310	310
300J	90	150	160	300	300	250	–	–	–	–	350	350	350
400J	115	200	200	400	400	350	–	–	–	–	420	420	420
600J	160	300	300	600	600	500	–	–	–	–	600	600	600
800J	200 (AC-2)	400 (AC-2)	–	800 (AC-2)	800 (AC-2)	–	–	–	–	–	800	800	800

Notes. ①AC-3-class electrical life is 1 million ops for 11J to 35J and 50H to 220H, 0.5 million ops for 6JC and 50J and 270H to 600J.
②AC-2-class electrical life is 0.1 million ops for 800J.
③AC-1-class electrical life is 0.5 million ops, and 0.1 million ops for 800J.

Classification by breaking capacity and making capacity

According to JIS, IEC, EN and VDE, the application of AC magnetic contactor is classified by breaking capacity and making capacity.

Class	Use	Make		Break	
		JIS, IEC, EN, VDE		JIS, IEC, EN, VDE	
		Current	Power factor	Current	Power factor
AC-1	Switching of resistance load	1.5Ie	0.8	1.5Ie	0.8
AC-2	Start and stop of wound rotor induction motor	4Ie	0.65	4Ie	0.65
AC-3	Start and stop of squirrel-cage induction motor	8Ie Only making10Ie	0.45(Ie100≦A) 0.35(Ie100>A)	8Ie	0.45(Ie100≦A) 0.35(Ie100>A)
AC-4	Inching and plugging of squirrel-cage induction motor	10Ie Only making12Ie	0.45(Ie100≦A) 0.35(Ie100>A)	10Ie	0.45(Ie100≦A) 0.35(Ie100>A)

Notes. ①Rated operational current
②Conforming to;
· JIS C 8201-4-1
· IEC 60947-4-1 : Low-voltage switchgear and controlgear, Part 4. Contactors and motor-starters
· EN 60947-4-1 : Specification for Low-voltage switchgear and controlgear, Part 4. Contactors and motor-starters
· VDE 0660 : Switchgear and controlgear, Part 102 Contactors.
③The values in ( ) show the limited scope of rated operational current (Ie).
④According to JIS C 8201-4-1, AC-2 is used for starting, inching and plugging of wound rotor induction motor.

Auxiliary contact ratings

Conforming to IEC

Frame	Rated thermal current〔A〕	Rated operational current (A)						Minimum operating voltage/current
		AC			DC			
		Rated operational voltage (V)	AC-15 class (coil load)	AC-12 class (resistive load)	Rated operational voltage (V)	DC-13 class (coil load)	DC-12 class (resistive load)	
6JC	10	110	3	5	24	4	10	12V 10mA
		240	2	4	48	0.7	10	
		440	1.5	3	110	0.5	7	
		550	1.8	2.7	220	0.2	0.8	
11J ～12J 21J～270H	10	110	10	10	24	10	10	24V 10mA
		240	6	6	48	2	10	
		440	3	4	110	1	10	
		550	3	3	220	0.25	1.2	
20J	32	110	28	32	24	12	20	48V 0.1A
		240	20	32	48	3	15	
		440	14	29	110	1	12	
		550	12	25	220	0.3	2	
300J～800J	10	110	2	10	24	—	2	24V 10mA
		220	2	10	48	—	2	
		440	1	10	110	—	2	
		550	0.75	—	220	—	2	

Conforming to UL

Frame	Rated thermal current〔A〕	Rated operational current (A)		
		AC		
		Rated operational voltage (V)	Make	Break
11J 21J 35J 50H 80H	10	120	60	6
		240	30	3
		480	15	1.5
		600	12	1.2

Operation coil ratings

2

AC operated

Specification	① Nominal coil voltage	② Rated coil voltage	③ Single rating	Model 6JC～270H 8JS	Model 300J～800J	Coil nameplate color
Standard	AC100V	100V 50Hz 100-110V 60Hz	110V 60Hz	○	—	Blue
		100-110V 50/60Hz	—	—	○	Yellow
	AC200V	200V 50Hz 200-220V 60Hz	220V 60Hz	○	—	〃
		200-220V 50/60Hz	—	—	○	White
	AC 24V	24V 50/60Hz	—	○	—	Green
	AC 50V	48-50V 50Hz 48-55V 60Hz	—	○	—	White
Semi-standard	AC110V	105-110V 50Hz 110-120V 60Hz	110V 50Hz 120V 60Hz	○	—	〃
	AC120V	110-120V 50Hz 120-130V 60Hz	120V 50Hz 127V 60Hz	○	—	〃
	AC127V	120-127V 50Hz 127-140V 60Hz	—	○	—	〃
	AC220V	208-220V 50Hz 220-240V 60Hz	220V 50Hz 240V 60Hz	○	—	〃
	AC240V	220-240V 50Hz 240-260V 60Hz	260V 60Hz	○	—	〃
	AC260V	250-260V 50Hz 260-280V 60Hz	—	○	—	〃
	AC380V	346-380V 50Hz 380-400V 60Hz	400V 60Hz	○	—	〃
	AC400V	380-400V 50Hz 400-440V 60Hz	380V 50Hz 440V 60Hz	○	—	Pink
		400-440V 50/60Hz	—	—	○	Blue
	AC440V ④	415-440V 50Hz 440-480V 60Hz	—	○	—	White
	AC500V ④	460-500V 50Hz 500-550V 60Hz	—	○	—	〃
Special	AC110V	110-120V 50/60Hz	—	—	○	Blue
	AC220V	220-240V 50/60Hz	—	—	○	〃
	AC346V	346-380V 50/60Hz	—	—	○	〃
Coil Terminal symbol				A1 A2		

Notes. ①Nominal coil voltage is designed to simplify specification in ordering. Please use nominal coil voltage when ordering.
②Rated coil voltage indicates the rated operating voltage and frequency marked on the coil.
③The single rating may be used for ordering (eg., 110V 60Hz), but the products are marked with the rated coil voltage.
Single rating can be selected by several coil votages, however being concluded to one of above nominal coil voltage.
④PAK-6JC are not manufactured.

Operation electromagnet ratings

For 110V

Model \ Item	Operation coil ratings		Operating voltage (V)		Electromagnetic capacity (VA)		Inrush current (A)	Exciting current (mA)	Loss (W)
	Voltage (V)	Frequency (Hz)	Minimum (less or equal)	Open (less or equal)	Inrush (max)	Sealed (max)			Sealed
PAK-6JC	100	50	73	70	22	6.4	0.14~0.22	38~64	2.1~3.5
	100-110	60	77.5	70	24	6.9	0.14~0.22	35~63	2.3~3.7
PAK-11J PAK-12J	100	50	72.5	70	64	11.0	0.52~0.64	66~110	2.2~3.7
	100-110	60	77.5	70	73	11.0	0.51~0.67	61~100	2.2~3.7
PAK-20J	100	50	72.5	70	64	11.0	0.52~0.64	66~110	2.2~3.7
	100-110	60	77.5	70	73	11.0	0.51~0.67	61~100	2.2~3.7
PAK-21J	100	50	72.5	70	64	11.0	0.52~0.64	66~100	2.2~3.7
	100-110	60	77.5	70	73	11.0	0.51~0.67	61~100	2.2~3.7
PAK-26J PAK-35J PAK-50J	100	50	76.5	70	112	17.2	0.98~1.12	103~172	3.9~6.7
	100-110	60	80	70	117	17.9	0.95~1.07	96~163	4.2~7.0
PAK-50H	100	50	81.5	65	186	27	1.15~1.86	160~270	4.7~8.5
	100-110	60	81.5	65	196	27	1.13~1.79	145~246	5~9.0
PAK-65H PAK-80H PAK-95H	100	50	81.5	62.5	250	30	1.65~2.50	180~300	6.4~9.1
	100-110	60	81.5	62.5	265	29	1.59~2.41	163~264	7.0~10.0
PAK-100H PAK-125H	100	50	82.5	65	470	43	3.85~4.70	350~430	10~16.5
	100-110	60	81.5	65	490	44	3.59~4.46	322~400	11~18.5
PAK-150H	100	50	79.5	60	682	64	5.86~6.82	380~640	9.5~17.5
	100-110	60	79.5	60	726	61	5.67~6.60	336~554	8.1~19
PAK-220H PAK-270H	100	50	79.5	60	682	64	5.86~6.82	380~640	9.5~17.5
	100-110	60	79.5	60	726	61	5.67~6.60	336~554	8.1~19
PAK-300J PAK-400J	100-110	50/60	75	70	1476	9.3	−⑥	84(max)⑦	7.7(max)⑦
PAK-600J PAK-800J	100-110	50/60	75	70	1771	12.2	−⑥	105(max)⑦	11.0(max)⑦

Model \ Item	Operation coil ratings		Power factor	Main contact operating time (ms)		Auxiliary NO operating time (ms)		Auxiliary NC operating time (ms)	
	Voltage (V)	Frequency (Hz)	Sealed	Closing	Opening	Closing	Opening	Opening	Closing
PAK-6JC	100	50	0.56	5~32	4~33	5~23	4~33	4~22	5~33
	100-110	60	0.58	6~25	4~33	6~25	4~33	4~22	5~33
PAK-11J PAK-12J	100	50	0.33	6~25	4~33	6~25	4~33	4~22	5~33
	100-110	60	0.34	6~25	4~33	6~25	4~33	4~22	5~33
PAK-20J	100	50	0.33	6~25	4~33	6~25	4~33	4~22	5~33
	100-110	60	0.34	6~25	4~33	6~25	4~33	4~22	5~33
PAK-21J	100	50	0.33	6~25	4~33	10~26	4~33	8~25	5~33
	100-110	60	0.34	6~25	4~33	11~28	4~33	8~25	5~33
PAK-26J PAK-35J PAK-50J	100	50	0.38	10~26	4~33	8~30	2~33	5~20	8~33
	100-110	60	0.39	11~28	4~33	8~30	2~33	5~20	8~33
PAK-50H	100	50	0.32	8~30	4~33	8~30	2~33	5~20	8~33
	100-110	60	0.33	8~30	4~33	8~30	2~33	5~20	8~33
PAK-65H PAK-80H PAK-95H	100	50	0.33	5~30	4~33	6~25	4~33	4~22	8~33
	100-110	60	0.40	5~30	4~33	6~25	4~33	4~22	8~33
PAK-100H PAK-125H	100	50	0.37	12~34	8~33	12~34	8~33	10~30	10~33
	100-110	60	0.40	12~34	8~33	12~34	8~33	10~30	10~33
PAK-150H	100	50	0.25	16~31	9~33	16~31	9~33	11~22	13~33
	100-110	60	0.28	16~35	9~33	16~35	9~33	11~25	13~33
PAK-220H PAK-270H	100	50	0.25	16~31	9~33	16~31	9~33	11~22	13~33
	100-110	60	0.28	16~35	9~33	16~35	9~33	11~25	13~33
PAK-300J PAK-400J	100-110	50/60	0.91	35~60	20~45	35~60	20~45	25~50	30~55
PAK-600J PAK-800J	100-110	50/60	0.89	40~70	20~50	40~70	20~50	35~60	30~60

Notes. ①IEC 60947-4-1 stipulate that 85% of rated voltage be applied to coil for switching operation, with satisfactory performance.
②Minimum operating voltages indicate 20 operations with zero failure.
③60Hz is used for 220V input, in addition to operating voltage.
④Values measured at 20℃±15℃ ambient temperature.
⑤Select operating transformers with capacities of at least a third of the electromagnet inrush capacity.
⑥Please ask Togami sales offices or Togami distributors.
⑦It is the maximum. Please ask the lower limited level to Togami sales offices.

Operation electromagnet ratings

2

For 220V

Item / Model	Operation coil ratings		Operating voltage (V)		Electromagnetic capacity (VA)		Inrush current (A)	Exciting current (mA)	Loss (W)
	Voltage (V)	Frequency (Hz)	Minimum (less or equal)	Open (less or equal)	Inrush (max)	Sealed (max)			Sealed
PAK-6JC	200	50	146	140	22	6.4	0.07~0.11	19~32	2.1~3.5
	200-220	60	155	140	24	6.9	0.07~0.11	18~31	2.3~3.7
PAK-11J PAK-12J	200	50	145	140	64	11.0	0.26~0.32	33~55	2.2~3.7
	200-220	60	155	140	73	11.0	0.26~0.33	31~51	2.2~3.7
PAK-20J	200	50	145	140	64	11.0	0.26~0.32	33~55	2.2~3.7
	200-220	60	155	140	73	11.0	0.26~0.33	31~51	2.2~3.7
PAK-21J	200	50	145	140	64	11.0	0.26~0.32	33~55	2.2~3.7
	200-220	60	155	140	73	11.0	0.26~0.33	31~51	2.2~3.7
PAK-26J PAK-35J PAK-50J	200	50	153	140	112	17.2	0.48~0.53	51~86	3.9~6.7
	200-220	60	160	140	117	17.9	0.48~0.53	48~81	4.2~7.0
PAK-50H	200	50	163	130	186	27	0.54~0.93	77~132	4.7~8.5
	200-220	60	163	130	196	27	0.53~0.89	70~120	5~9.0
PAK-65H PAK-80H PAK-95H	200	50	163	125	250	30	0.78~1.30	88~148	6.4~9.1
	200-220	60	163	125	265	29	0.75~1.25	80~132	7.0~10.0
PAK-100H PAK-125H	200	50	165	130	470	43	1.61~2.35	148~215	10~16.5
	200-220	60	163	130	490	44	1.53~2.23	136~200	11~18.5
PAK-150H	200	50	159	120	682	64	2.93~3.41	190~320	9.5~17.5
	200-220	60	159	120	726	61	2.58~3.30	140~277	8.1~19
PAK-220H PAK-270H	200	50	159	120	682	64	2.93~3.41	190~320	9.5~17.5
	200-220	60	159	120	726	61	2.58~3.30	140~277	8.1~19
PAK-300J PAK-400J	200-220	50/60	150	140	1537	8.9	−⑥	41(max)⑦	7.4(max)⑦
PAK-600J PAK-800J	200-220	50/60	150	140	1735	12.1	−⑥	52(max)⑦	11.0(max)⑦

Item / Model	Operation coil ratings		Power factor	Main contact operating time (ms)		Auxiliary NO operating time (ms)		Auxiliary NC operating time (ms)	
	Voltage (V)	Frequency (Hz)	Sealed	Closing	Opening	Closing	Opening	Opening	Closing
PAK-6JC	200	50	0.56	5~32	4~33	5~23	4~33	4~22	5~33
	200-220	60	0.58	6~25	4~33	6~25	4~33	4~22	5~33
PAK-11J PAK-12J	200	50	0.33	6~25	4~33	6~25	4~33	4~22	5~33
	200-220	60	0.34	6~25	4~33	6~25	4~33	4~22	5~33
PAK-20J	200	50	0.33	6~25	4~33	6~25	4~33	4~22	5~33
	200-220	60	0.34	6~25	4~33	6~25	4~33	4~22	5~33
PAK-21J	200	50	0.33	6~25	4~33	10~26	4~33	8~25	5~33
	200-220	60	0.34	6~25	4~33	11~28	4~33	8~25	5~33
PAK-26J PAK-35J PAK-50J	200	50	0.38	10~26	4~33	8~30	2~33	5~20	8~33
	200-220	60	0.39	11~28	4~33	8~30	2~33	5~20	8~33
PAK-50H	200	50	0.32	8~30	4~33	8~30	2~33	5~20	8~33
	200-220	60	0.33	8~30	4~33	8~30	2~33	5~20	8~33
PAK-65H PAK-80H PAK-95H	200	50	0.33	5~30	4~33	6~25	4~33	4~22	8~33
	200-220	60	0.40	5~30	4~33	6~25	4~33	4~22	8~33
PAK-100H PAK-125H	200	50	0.37	12~34	8~33	12~34	8~33	10~30	10~33
	200-220	60	0.40	12~34	8~33	12~34	8~33	10~30	10~33
PAK-150H	200	50	0.25	16~31	9~33	16~31	9~33	11~22	13~33
	200-220	60	0.28	16~35	9~33	16~35	9~33	11~25	13~33
PAK-220H PAK-270H	200	50	0.25	16~31	9~33	16~31	9~33	11~22	13~33
	200-220	60	0.28	16~35	9~33	16~35	9~33	11~25	13~33
PAK-300J PAK-400J	200-220	50/60	0.91	35~60	20~45	35~60	20~45	25~50	30~55
PAK-600J PAK-800J	200-220	50/60	0.89	40~70	20~50	40~70	20~50	35~60	30~60

Notes. ①IEC 60947-4-1 stipulate that 85% of rated voltage be applied to coil for switching operation, with satisfactory performance.
②Minimum operating voltages indicate 20 operations with zero failure.
③60Hz is used for 220V input, in addition to operating voltage.
④Values measured at 20℃±15℃ ambient temperature.
⑤Select operating transformers with capacities of at least a third of the electromagnet inrush capacity.
⑥Please ask Togami sales offices or Togami distributors.
⑦It is the maximum. Please ask the lower limited level to Togami sales offices.

Application of thermal overload relay for motors

Motor output capacity (kW)	240V 3-phase motor(4-pole)			440V 3-phase motor(4-pole)		
	Magnetic starter	Thermal overload relay		Magnetic starter	Thermal overload relay	
		Model	Rated current(A)		Model	Rated current(A)
0.1	6JC	TJ-18JA TJ-18JA-3 GTJ-18JA	0.7	6JC	TJ-18JA TJ-18JA-3 GTJ-18JA	0.35
0.2			1.2			0.7
0.4			2.3			1.2
0.75			3.6			1.8
1.1			5			2.5
1.5			6.7			3
2.2			9.2			4.6
2.5	11J	TJ-18 TJ-18-3 GTJ-18	11			5.5
2.7			11			6
3.7			15			7.5
4	12J		18			7.5
4.5	20J 21J		18	11J	TJ-18 TJ-18-3 GTJ-18	9.5
5.5			22	12J		11
7.5			26	20J 21J		15
10	26J	TJ-35 TJ-35-3 GTJ-35	35			–
11	35J		42			22
15			56	26J	TJ-35 TJ-35-3 GTJ-35	30
18.5	50J		65			34
	50H	TJ-50 TJ-50-3 GTJ-50	65			–
20	65H		70			35
22			80	35J		39
25	80H		90			42
26	95H		–			45
27			105	50J		48
30	100H	TJ-125 TJ-125-3 GTJ-125	105			62
				50H	TJ-50 TJ-50-3 GTJ-50	62
37			130	65H		68
40	125H		130	80H		68
45			160			80
55	150H		180	95H		105
				100H	TJ-125 TJ-125-3 GTJ-125	
60			200	125H		125
75	220H	TJ-220 TJ-220-3 GTJ-220	240(240)	150H		130
80			275	220H	TJ-220 TJ-220-3 GTJ-220	130
90	270H		310			160
	300J	T-400 GT-400	380(300)③			
110	400J		380(300)③	270H		220
115			400			230
132	600J	T-600 GT-600	500(500)③			270
150				300J	T-400 GT-400	240(300)③
160			600	400J		–
200	–	–	–			380(300)③
220				600J	T-600 GT-600	380(380)③
250						–
300						500(500)③

Notes. ①Load current will be different for 3-phase motors with other than four poles, and for non-standard motors. Selected the rated current appropriate for each motor in this case.
②If the same rated current is not available, select the closest current and use the adjusting dial to match it to the rated motor current.
③Rated current in parentheses indicates for GT-400 and GT-600 models.

2

Performance

Model	Rated operating voltage (V)	Rated operating current (A)	Closing & breaking current (A)		Switching frequency (ops/hour)	Life (×10⁶ ops)		Category
			Closing	Breaking		Mechanical	Electrical	
PAK —6JC	240	8.7	87	69.6	1,200	2.5	0.5	AC-3
	440	7.9	79	63.2				
PAK —11J	240	13.5	135	108	1,200	5	1	
	440	9.5	95	76				
PAK —12J	240	15	150	120	1,200	5	1	
	440	11.5	115	92				
PAK —20J	240	27	270	216	1,200	5	1	
	440	22	220	176				
PAK —21J	240	27	270	216	1,200	5	1	
	440	22	220	176				
PAK —26J	240	35	350	280	1,200	5	1	
	440	35	350	280				
PAK —35J	240	52	520	416	1,200	5	1	
	440	45	450	360				
PAK —50J	240	65	650	520	1,200	5	0.5	
	440	62	620	496				
PAK —50H	240	65	650	520	1,200	5	1	
	440	62	620	496				
PAK —65H	240	80	800	640	1,200	5	1	
	440	75	750	600				
PAK —80H	240	90	900	720	1,200	5	1	
	440	90	900	720				
PAK —95H	240	110	1,100	880	1,200	5	1	
	440	110	1,100	880				
PAK —100H	240	125	1,250	1,000	1,200	5	1	
	440	110	1,100	880				
PAK —125H	240	150	1,500	1,200	1,200	5	1	
	440	125	1,250	1,000				
PAK —150H	240	200	2,000	1,600	1,200	5	1	
	440	150	1,500	1,200				
PAK —220H	240	275	2,750	2,200	1,200	5	1	
	440	180	1,800	1,440				
PAK —270H	240	310	3,100	2,480	1,200	5	0.5	
	440	265	2,650	2,120				
PAK —300J	220	300	3,000	2,400	1,200	5	0.5	
	440	300	3,000	2,400				
PAK —400J	220	400	4,000	3,200	1,200	5	0.5	
	440	400	4,000	3,200				
PAK —600J	220	600	6,000	4,800	1,200	5	0.5	
	440	600	6,000	4,800				
PAK —800J	220	800	3,200	3,200	1,200	1	0.1	AC-2
	440	800	3,200	3,200				

●Closing and breaking current
The number of operations for closing is 50 times, and for breaking is 50 times.

AC-3 Electrical life (contact durability) characteristics

■ AC240V 3-phase AC-3-class

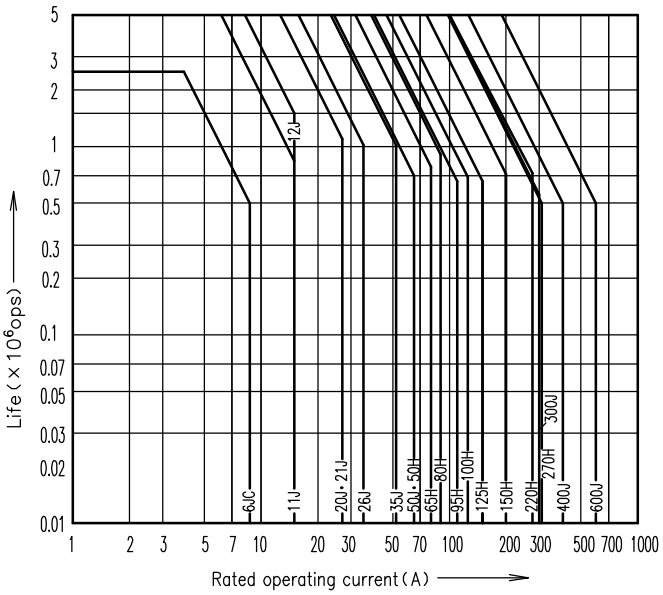

■ AC440V 3-phase AC-3-class

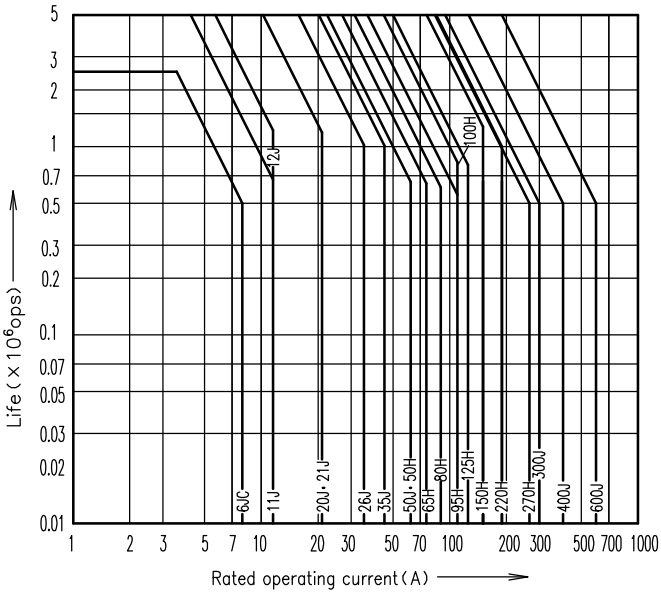

AC-1 Electrical life (contact durability) characteristics

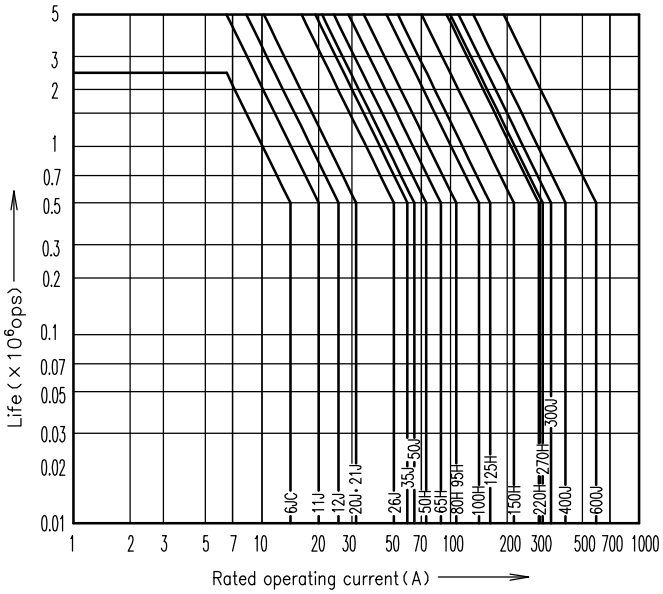

Test condition and performance indication (Reference)

Test condition and test method

Test item	Test condition (Main circuit energization condition)	Test methods
Closed circuit breaking	Motor rated operational voltage × 1.05 times Motor full-load current × 10 times Power factor : 100A or less → 0.45 Over 100A → 0.35	110% impression of rated control power-supply voltage × 25 times + 85% impression of rated control power-supply voltage ×25 times
Loop and breaking current test	Motor rated operational voltage × 1.05 times Motor full-load current × 8 times Power factor : 100A or less → 0.45 Over 100A → 0.35	Following loop current test, 100% impression of rated control power-supply voltage × 50 times making/breaking
Electrical life test	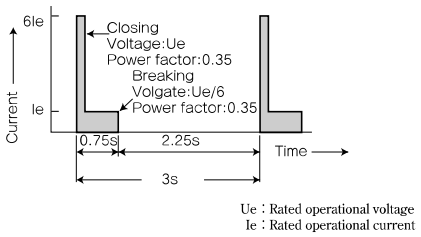 Notes.At 25% duty cycle and 1000 times/hour open/close frequency	Impressing 100% voltage of rated control power voltage, switching at rated frequency under the left condition, and conforming switching without change of contacts.
Mechanical life test	No motor load.	Mechanical life 6JC : 25×10^6 times 11J～600J : 50×10^6 times 800J : 10×10^6 times Swithing frq. 6JC～800J : 1200 times/hour

Note. The above test method comply with JIS AC-3

Performance indication

AC — 3 · 1 · 0 — 0

Classification by loop current and breaking curent		
Class	Multiple for rated operational current	
	Make	Break
AC-1	1.5	1.5
AC-2	10	8
AC-3	12	10

Number by switching frequency		
Number	Switching frequency (times/hour)	Energization rate
0	1,800	15
1	1,200	25
2	600	40
3	300	40
4	150	60
5	30	60

Classification by life		
Class	Mechanical (more than 1×10^4 ops)	Electrical (more than 1×10^4 ops)
0	1,000	100
1	500	50
2	250	25
3	100	10
4	25	5
5	5	1

Notes. 0 - 0
Electrical life
Mechanical life

Contact configuration of direct-online starting

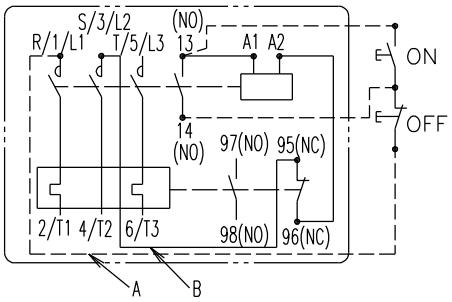

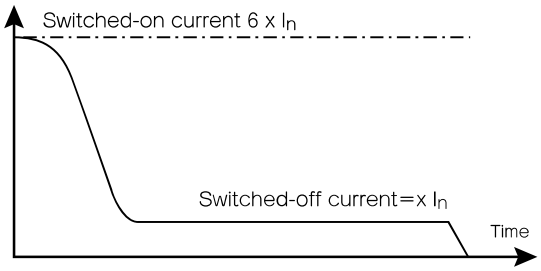

Application for direct-online starting (AC-3) in consideration of electrical life

Main circuit voltage	Motor		1×10⁶ ops	2×10⁶ ops	3×10⁶ ops	4×10⁶ ops	5×10⁶ ops
	Capacity〔kW〕	Current〔A〕					
200～240V	0.75	3.6	6JC	6JC	11J	11J	11J
	1.5	6.7	6JC	11J	11J	11J	11J
	2.2	9.2	6JC	11J	20J・21J	20J・21J	20J・21J
	3.7	15	11J	20J・21J	20J・21J	26J	26J
	5.5	22	20J・21J	26J	35J	35J	35J
	7.5	26	20J・21J	35J	35J	35J	50H
	11	42	35J	50H	65H	80H	95H
	15	56	35J	65H	95H	100H	125H
	18.5	65	50J	95H	100H	125H	125H
	22	80	65H	100H	125H	150H	150H
	30	105	100H	125H	150H	220H	220H
	37	130	100H	150H	220H	220H	600J
	45	160	125H	220H	400J	600J	600J
	55	180	150H	220H	600J	600J	600J
	75	240	220H	600J	600J	—	—
	110	380	400J	—	—	—	—
380～440V	1.5	3	6JC	6JC	6JC	11J	11J
	2.2	4.6	6JC	11J	11J	11J	12J
	3.7	7.5	6JC	12J	20J・21J	20J・21J	20J・21J
	5.5	11	12J	20J・21J	20J・21J	20J・21J	26J
	7.5	15	20J・21J	20J・21J	26J	26J	26J
	11	22	20J・21J	26J	35	35J	50H
	15	30	26J	35J	50H	50H	65H
	18.5	34	26J	50H	50H	65H	80H
	22	39	35J	50H	65H	80H	80H
	30	62	50J	80H	95H	125H	150H
	37	68	65H	95H	125H	150H	220H
	45	80	80H	125H	150H	220H	220H
	55	105	95H	150H	270H	300J	400J
	75	130	150H	270H	400J	400J	600J
	90	160	220H	400J	400J	600J	600J
	110	220	270H	600J	600J	—	—
	132	270	270H	600J	—	—	—
	160	300	400J	—	—	—	—
	220	380	600J	—	—	—	—

2

Direct-online starting and star-delta starting

Starting method	Direct-online starting	Star-delta starting
Figure	MC : Magnetic contactor IN : Full-load current of motor IST : Direct-online starting current of motor 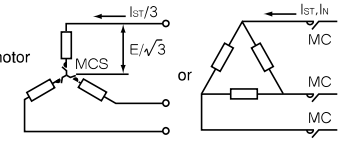	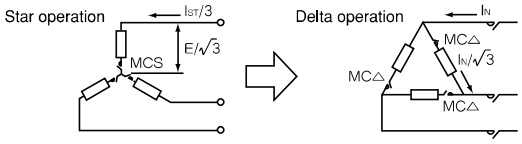
Overview	• It is starting method that directly applies rated voltage to motor by magnetic contactor. • Because of large starting current, AC-3 magnetic contactors that have an ability to close current 10 times larger than full load current of the motor and break current 8 times larger than that, shall be applied.	• When you put MSC, it starts with each winding (⅄) added the 1/√3 of line voltage. After speed-up, it opens MSC and put MC△, then make winding into △ and starts on full voltage operation.
Current characteristic	• Starting current is 5~6 times larger than full-load current of motor.	• Starting current is 1/3 of when motor rated voltage is impressed.
Torque characteristic	• Starting torque is large and not controlled.	• Starting torque is 1/3 of when motor rated voltage is impressed.
Cost	• Cheapest	• Cheaper

Application for inching and plugging operation

For inching and plugging operation use the following table for selection.
The table indicates applications for approximate electrical lives of 100,000, 250,000 and 500,000 operational. Electrical life calculations are based on a motor starting current six times the full load current.

●Appllicable motors

3-phase squirrel-cage induction motor

3-phase wound rotor induction motor

●Switching frequency

PAK- 6JC~ 50J : 600 operations／hour

PAK- 50H~ 95H : 600 〃

PAK-100H~270H, PAK- 300J~ 600J : 300 〃

Units kW

Voltage / Inching factor / Electrical life(ops) / Frame	200 to 240V circuits						380 to 440V circuits					
	25 %			50 %			25 %			50 %		
	100,000	250,000	500,000	100,000	250,000	500,000	100,000	250,000	500,000	100,000	250,000	500,000
6JC	1.1	0.4	0.4	0.4	0.2	0.2	1.5	1.1	0.4	1.1	0.4	0.2
11J	2.2	1.5	0.75	1.5	0.75	0.4	3	1.5	1.1	2.2	1.5	0.75
12J	2.7	1.5	1.1	1.5	1.1	0.75	4	2.2	1.5	2.7	1.5	1.1
20J	3	2.2	1.1	2.2	1.5	0.75	4.5	4	2.2	4	2.2	1.5
21J	4	2.7	1.5	2.7	1.5	1.1	7.5	4.5	2.5	5.5	2.5	2.2
26J	5.5	3.7	2.2	4	2.7	1.5	11	7.5	4.5	7.5	4.5	3.7
35J	7.5	4.5	3	5.5	3	2.2	15	11	7.5	11	7.5	4.5
50J	11	7.5	3	7.5	4.5	2.2	22	15	7.5	15	11	4.5
50H	11	7.5	4	7.5	4.5	2.5	25	15	11	15	11	7.5
65H	15	11	7.5	11	5.5	4.5	30	25	15	19	15	11
80H	19	15	11	15	11	7.5	37	30	22	22	19	15
95H	25	19	15	19	15	11	45	37	25	37	25	19
100H	25	19	15	19	15	11	45	37	25	37	25	19
125H	30	22	19	22	19	15	55	40	30	40	30	22
150H	40	25	22	25	22	19	75	60	40	60	40	30
220H	55	37	30	37	30	25	95	75	55	75	55	37
270H	60	45	37	45	37	30	95	80	55	80	55	40
300J	60	37	30	45	30	22	100	65	45	75	45	30
400J	85	50	37	60	40	30	120	80	60	90	60	40
600J	95	70	50	75	55	37	165	100	75	132	75	55

Note. $\text{Inching factor}(\%) = \dfrac{\text{inching count}}{\text{inching count + normal operation (AC-3) count}} \times 100\ (\%)$

Sequence diagram of star-delta starters

●Circuits

We recommend a 3-contactor type with main magnetic contactor which isolates the motor from the power supply when operation is stopped.
When using a 2-contactor type, always install a breaker on the primary side, and use it to open the circuit and shut off voltage to the motor.

Open transition

3-contactor type

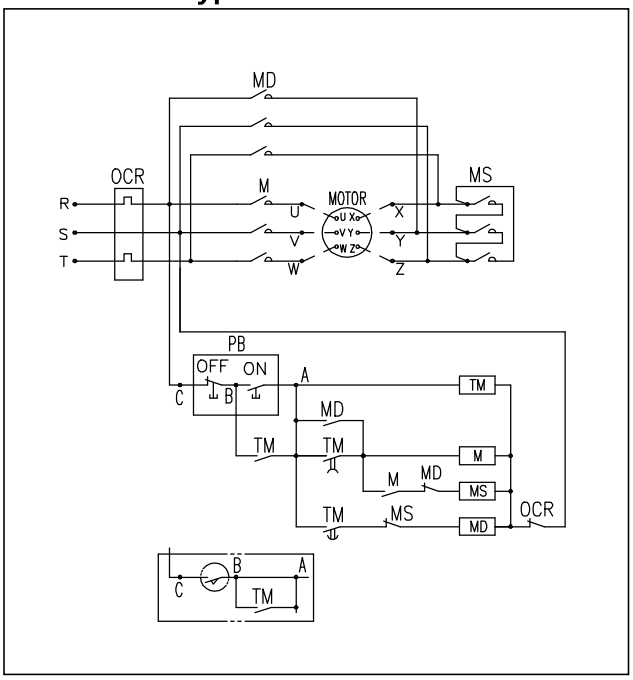

2-contactor type

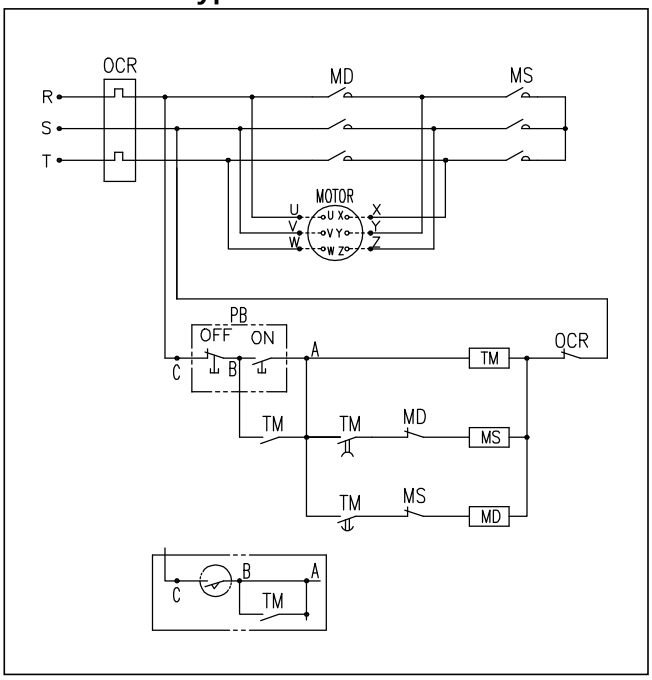

M ：Main magnetic contactor
MS：Star-side magnetic contactor
MD：Delta-side magnetic contactor
OCR：Thermal overload relay
TM ：Timer （Omron H3CR-G8EL or star-delta timer）
PB ：Pushbutton switch

Connection diagram

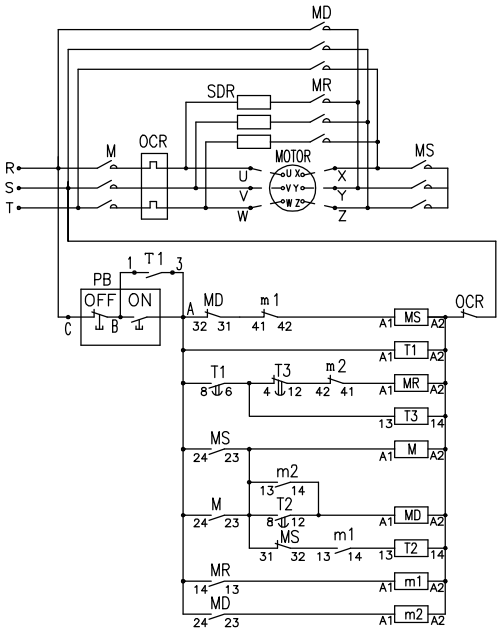

2

Application for star-delta starters

＊SDH

Model		Rated capacity（kW）		Contactor used		Thermal overload relay	Timer used
Enclosed type	Open type	200—220V	380—440V	M D	M S	O C R	T M
SDH— 25HMC	SDH— 25HTC	5.5	5.5	PAK— 21J	PAK— 12J31	TJ—35	H3CR—G8EL
SDH— 35HMC	SDH— 35HTC	7.5	11	PAK— 26J	PAK— 21J	〃	〃
SDH— 50HMC	SDH— 50HTC	11	19	PAK— 35J	PAK— 26J	〃	〃
SDH— 80HMC	SDH— 80HTC	19	26	PAK— 50H	PAK— 35J	TJ—50	〃
SDH—100HMC	SDH—100HTC	26	37	PAK— 65H	PAK— 50H	〃	〃
SDH—150HMC	SDH—150HTC	40	55	PAK—100H	PAK— 65H	TJ—125	〃
SDH—220HMC	SDH—220HTC	55	90	PAK—150H	PAK—100H	〃	〃
SDH—300HMC	SDH—300HTC	75	150	PAK—220H	PAK—125H	TJ—35C+CT	〃

Notes. Refer to P14 for the contrast table of the motor capacity and the rated current of thermal overload relay.

＊SDH3（with power cut-off contactor）

Model		Rated capacity（kW）		Contactor used			Thermal overload relay	Timer used
Enclosed type	Open type	200—220V	380—440V	M	M D	M S	O C R	T M
SDH3— 25HMC	SDH3— 25HTC	5.5	5.5	PAK— 21J		PAK— 21J	TJ—35	H3CR—G8EL
SDH3— 35HMC	SDH3— 35HTC	7.5	11	PAK—26J	PAK—21J	〃	〃	〃
SDH3— 50HMC	SDH3— 50HTC	11	19	PAK— 35J		〃	〃	〃
SDH3— 80HMC	SDH3— 80HTC	19	26	PAK— 50H		PAK— 26J	TJ—50	〃
SDH3—100HMC	SDH3—100HTC	26	37	PAK— 65H		PAK— 35J	〃	〃
SDH3—150HMC	SDH3—150HTC	40	55	PAK—100H		PAK— 50H	TJ—125	〃
SDH3—220HMC	SDH3—220HTC	55	90	PAK—150H		PAK— 65H	〃	〃
SDH3—300HMC	SDH3—300HTC	75	150	PAK—220H		PAK—100H	TJ—35C+CT	〃

Notes. Refer to P14 for the contrast table of the motor capacity and the rated current of thermal overload relay.

Application for resistance load

●Normal application

When the magnetic starter or contactor is used for resistance load like electric heater or furnace, AC-1 is applied because it is not necessary to consider inrush current at starting.

Frame	Single phase				3-phase			
	110V		220V		220V		440V	
	Capacity〔kW〕	Current〔A〕	Capacity〔kW〕	Current〔A〕	Capacity〔kW〕	Current〔A〕	Capacity〔kW〕	Current〔A〕
6JC	1.7	15	3.3	15	5.7	15	11	15
11J	2.2	20	4.4	20	7.6	20	15	20
12J	2.9	26	5.7	26	9.9	26	20	26
20J・21J	3.5	32	7	32	12	32	24	32
26J	5.5	50	11	50	19	50	38	50
35J	6.6	60	13	60	23	60	46	60
50J	7.2	65	14	65	24	65	50	65
50H	8.3	75	17	75	29	75	57	75
65H	9.9	90	20	90	35	90	69	90
80H・95H	12	110	24	110	42	110	84	110
100H	17	150	33	150	57	150	114	150
125H	19	170	37	170	64	170	130	170
150H	24	220	48	220	83	220	168	220
220H	30	275	61	275	106	275	210	275
270H	34	310	68	310	118	310	236	310
300J	39	350	77	350	133	350	267	350
400J	46	420	92	420	159	420	320	420
600J	66	600	132	600	229	600	457	600
800J	88	800	176	800	305	800	610	800

Notes. ①In the case of electrical life 0.5 million ops.
②In the case of the standard value of AC-1 closed path or breaking current, please refer to P9.

●Parallel connection of terminal as for single phase resistance load

When magnetic contactor is used as for single phase resistance load, it is possible to increase the rated capacity if each terminal of 3 poles are connected in parallel.

Application for capacitive load

2

Application for capacitive load

Application for individual-use capacitors

Frame	3-phase capacity				Single-phase capacity			
	200 V		400 V		200 V		400 V	
	kvar	A	kvar	A	kvar	A	kvar	A
6JC	1.5	4.5	2.8	4	0.9	4.5	1.6	4
11J	2.5	8	3.5	5	1.6	8	2	5
12J	3	9	4.5	6.5	1.8	9	2.6	6.5
20J	5	15	8	12	3	15	4.8	12
21J	5	15	8	12	3	15	4.8	12
26J	6	19	11	16	3.8	19	6.4	16
35J	9	26	15	22	5.2	26	8.8	22
50J	11	32	16	24	6.4	32	9.6	24
50H	13	40	20	30	8	40	12	30
65H	15	50	25	40	10	50	16	40
80H	20	60	38	55	12	60	22	55
95H	22	65	40	60	13	65	22	55
100H	25	80	40	60	16	80	24	60
125H	34	100	50	75	20	100	30	75
150H	40	125	68	100	25	125	40	100
220H, 270H	60	180	80	120	36	180	48	120
300J	80	231	160	231	46	230	92	230
400J	100	289	200	289	57	285	115	288
600J	150	433	300	433	86	430	173	433

Notes. ①Applicable frequencies for above table are 50 and 60Hz.
②The peak inrush current at closing is below 20 times than the rated capacitor current (effective) .

●Circuits

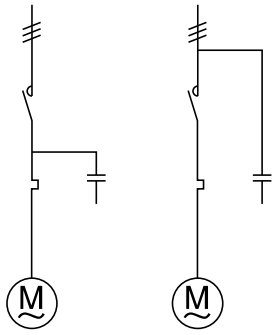

Application for DC load

Voltage (V)	Model	Rated current (A)						
		Resistance load		Inductive load (DC motor)		Inductive load (coil)		
		2P	3P	2P	3P	1P	2P	3P
48	PAK-6JC PAK6JDCC	6	6	6	6	2	3	6
110		5	6	2.5	5	1	1.5	4
220		2	4	0.8	2.5	0.15	0.5	1.5
48	PAK-11J	10	10	8	10	4	5	8
110		8	10	4	8	1	2.5	5
220		4	6	1.5	4	0.25	0.75	3
48	PAK-12J	13	13	10	13	5	6	12
110		10	13	6	10	1.5	3	6
220		6	9	2	6	0.3	1.2	4
48	PAK-20J	16	16	13	16	8	12	15
110		13	16	8	16	2	5	12
220		7	10	4	8	0.4	1.5	5
48	PAK-21J	20	20	16	20	9	13	20
110		16	20	9	16	2.5	5	15
220		8	12	3.5	9	0.5	2	6
48	PAK-26J	25	25	20	25	10	15	25
110		20	25	10	20	3	6	15
220		10	15	4	10	0.5	2	6
48	PAK-35J	35	35	25	35	15	20	35
110		30	35	15	30	5	8	25
220		15	24	6	12	1	2.5	8
48	PAK-50H	50	50	35	50	20	25	50
110		40	50	24	40	8	10	30
220		20	35	8	15	2	5	10
48	PAK-65H	65	65	50	65	25	30	65
110		60	65	30	60	15	20	40
220		30	55	15	30	5	10	20
48	PAK-80H	80	80	65	80	30	40	80
110		70	80	40	80	20	30	60
220		40	55	20	50	7	15	30
48	PAK-100H	100	100	80	100	40	50	100
110		90	100	50	90	30	35	70
220		50	65	40	60	10	20	40
48	PAK-125H	125	125	100	125	50	70	120
110		120	125	80	120	40	50	90
220		70	85	60	70	12	25	50
48	PAK-150H	150	150	125	150	–	–	–
110		140	150	110	140	–	–	–
220		80	100	70	80	–	–	–
48	PAK-220H PAK-270H	225	225	200	225	–	–	–
110		200	225	150	200	–	–	–
220		120	150	80	120	–	–	–
48	PAK-300J	Please ask Togami sales offices or Togami distributors.						
110								
220								
48	PAK-400J							
110								
220								
48	PAK-600J							
110								
220								

Notes. ①Time constant of inductive load is;
for DC motor=15m sec.
for coil =100m sec.
②Electrical life shall be about 0.5×10^{6}.
③Breaking capacity is;
for resistance load and DC=more than 5times for rated current
=more than 1.2times for rated current

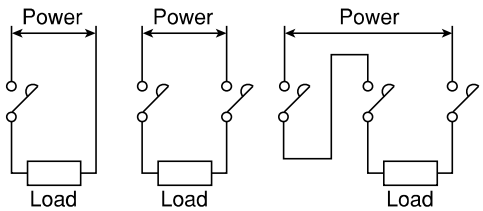

Protection coordination

For direct on-line starting, magnetic starters have a switching capacity of ten times the rated current, and but it cannot break a short circuit current. Thus it uses all together a characteristic of cooperative action with a fuse or a no-fuse breaker. If the protection coordination is not good, a burnout of contacting points or heaters of thermal relay will occur.

The heater which short-circuit current was applied that it will burn out with even a momentary over-current that flows before a breaker or a fuse makes a break action. On 5A or smaller rated models, the heater itself becomes a resistor to reduce the short circuit current and burnout will not always occur. The short circuit current is reduced for a heater with smaller capacity, so the breaking time is prolonged and short circuit current flows for a longer time. This may cause a damage to the bimetal plate by overheating.

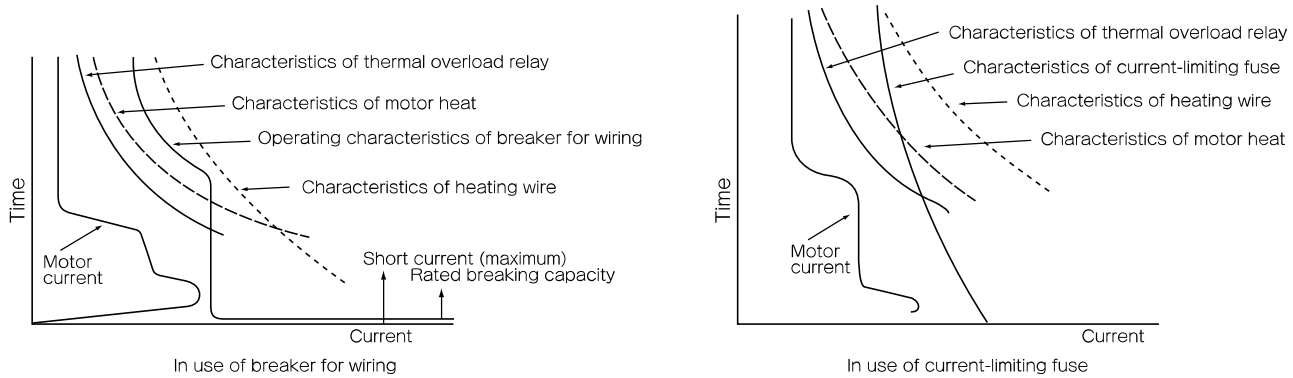

Protective coordination characteristic curves of motor circuit

Standard service conditions

(1) Standard ambient temperature	Enclosed model 40℃ (max mean daily temperature 30℃ / max mean annual temperature 25℃)
	Open model (to be used in control box) 55℃
(2) Maximum ambient temperature	Open model 60℃ (mean daily temperature not to exceed 50℃)
(3) Minimum ambient temperature	−5℃
(4) Ambient storage temperature	−20℃～70℃
(5) Relative humidity	45%～85%RH
(6) Altitude	2,000m max.
(7) Vibration-resistant	10～55Hz 2G
(8) Shock-resistant	5G
(9) Atmosphere	Don't dew and freeze,and must not contain much dust,smoke, corrosive gas,flammable gas, vapor, and salt.
(10) Pollution degree	Please use magnetic contactors and starters in environment of lower than pollution degree 3.

Pollution degree3 : Conductive pollutant occurs.
Or
Pollutant of dry non-conductive occurs in normal condition. But
Pollutant of conductive occurs in dew condensation condition.
(IEC 60947-1)

Installation

●Direct mounting

(1) Select a well-ventilated location free of excessive dust and vibration.
(2) Install vertically on a solid surface as shown.
A maximum inclination of 30° is allowable. The power side of the line terminals should be on the top.

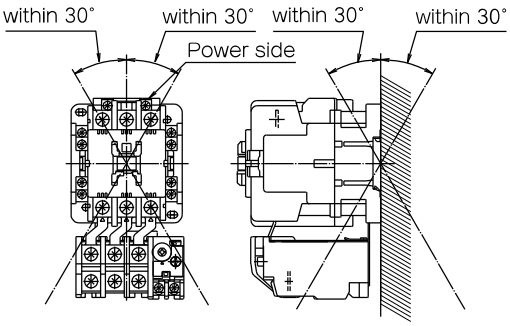

Standard Mounting Position

●DIN rail mounting

(1) Applicable rails
Mounts on 35-mm wide rails comforming to DIN, IEC and JIS C 2812. Rail shape and dimensions are as shown below.

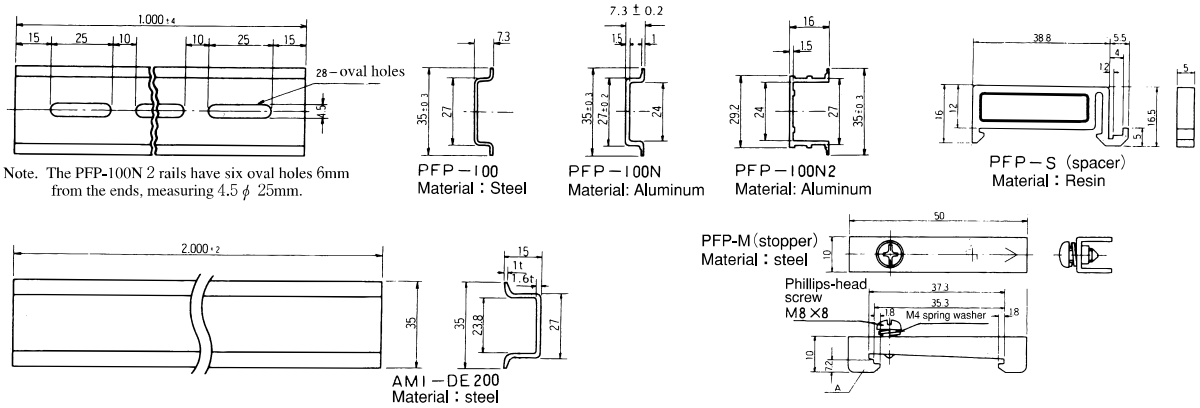

①Note. The PFP-100N2 rails have six oval holes 6mm from the ends, measuring 4.5 x 25 mm.
②Note. PFP-100 (steel) and AMI-DE200 (steel) cannot be used with the PAK-11J to 21J.

(2) Rail mounting screw pitch
When installing the rails, use the following screw pitch to assure sufficient mechanical strength.

Frame / Rail height (mm)	6JC 12J、11J 20J、21J、8JS	26J 35J 50J	50H-DN 65H-DN 80H-DN 95H-DN
7.5 (7.3)	250	200	200
15 , 16	500	500	500

Mounting space

For mounting more than one magnetic starters in a row, make sure that the space between the units is more than the distance indicated in the table below. Also, be sure that the space between the starter and other earthed metallic items is more than the distance indicated below.

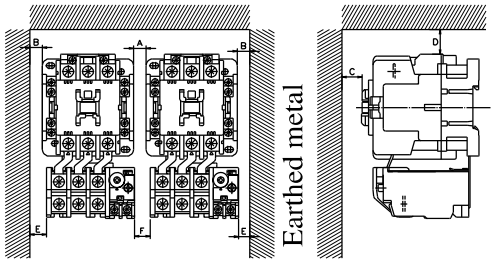

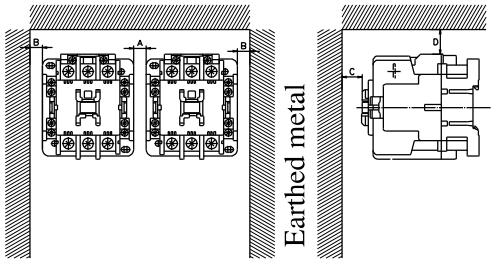

Model \ Space (mm)	A	B	C	D	E	F
PAK-6JTC, 6JGTC	5	5	5	10	5	5
PAK-11JTC, 12JTC, 11JGTC, 12JGTC	5	5	5	10	5	5
PAK-20JTC～50JT, 20JGTC～50JGT	5	5	5	10	5	5
PAK-50HTC～95HT	5	5	5	30	–	–
PAK-100HTC, 125HTC	5	5	5	40	–	–
PAK-150HTC	5	10	5	50	–	–
PAK-220HTC, 270HT	–	–	5	50	10	15
PAK-300JT, 400JT	10	10	1	30	10	10
PAK-600JT	10	10	1	50	10	10

Notes. ①The space indicates the distance from the largest part of the product.
②Dimension D for PAK-150HT, to 600JT is from the edge of the main circuit terminal.
③Also applies to magnetic starters with 3-heaters thermal overload relays.

Model \ Space (mm)	A	B	C	D
PAK-6JC	5	5	5	10
PAK-11J, 12J	5	5	5	10
PAK-20J～50J	5	5	5	10
PAK-50H～95H	5	5	5	30
PAK-100H, 125H	5	5	5	40
PAK-150H	5	10	5	50
PAK-220H, 270HT	20	20	5	50
PAK-300J, 400J	10	10	1	30
PAK-600J, 800J	10	10	1	50

Notes. ①The space indicates the distance from the largest part of the product.
②Dimension D for PAK-150H to 800J is from the edge of the main circuit terminal.

Conforming wire size and tightening torque

Please follow installation instructions carefully for wiring. Incorrect installing of terminal screws will result accidents due to overheating of connecting points and disconnecting of wires.
Screws should be properly installed in accordance with the specified values given in the table below.

Frame \ Item		Screw size				Conforming wire			Conforming crimp-type terminals			Tightening torque N·m{kgf·cm}			
		Main circuit		Control circuit		Main circuit		Control circuit	Main circuit		Control circuit	Main circuit		Control circuit	
		Contactor	Thermal			Contactor	Thermal		Contactor	Thermal		Contactor	Thermal		
J Series	PAK-6JC PAK-11J PAK-12J	M 3.5	M 4	⑥ M3.5		φ1～1.6 0.5～2mm²	φ1～2 0.5～5.5mm²	φ1～1.6 0.5～2mm²	1.25-3.5～2-3.5	1.25-4～5.5-4	1.25-3.5 ～ 2-3.5	0.8～1.2 {8～12}	1.2～1.8 {12～18}	0.8～1.2 {8～12}	
	PAK-20J PAK-21J	M 4				φ1～2 0.5～5.5mm²			1.25-4～5.5-4			1.2 ～1.8 {12～18}			
	PAK-26J	M 5				φ1.6～3.2 1.25～14mm²			1.25-5～14-5			2.4 ～3.5 {24～36}			
	PAK-35J PAK-50J	M 5				φ1.6～3.2 1.25～14mm²			1.25-5～14-5						
H Series	PAK-50H	M 6				⑤ 2～38mm²			① 2-6～38-6S			3.9～5.9 {40～60}			
	PAK-65H PAK-80H PAK-95H	M 6				⑤ 2～38mm²			① 2-6～38-6S						
	PAK-100H PAK-125H PAK-150H	M 8				⑤ 2～80mm²			② 2-8～CB80-8			9.0～13.5 {92～138}			
	PAK-220H PAK-270H	M 10				2～150mm²⑤			2-10～150-10			18.1～27 {185～275}			
J Series	PAK-300J PAK-400J	M 12				⑤ 2～200mm²			2-12～200-12		1.25-3.5 ～ 2-3.5 1.25-4 ～ 2-4	35～45 {350～450}		0.8～1.0 {8～10}	
	PAK-600J	M 12		③ M 4	④ M 3.5	⑤ 2～325mm²	φ1.6 1.25～2mm²		2-12～325-12					M4 1.0～1.5 {10～15}	M3.5 0.8～1.0 {8～10}
	PAK-800J	M 16			–	⑤ 2～325mm²	φ1～2 0.5～5.5mm²		2-16～325-16						

Notes. ① Standard 38-6 crimp-type terminal lug is too wide, and not suitable for the terminal. Please use 38-6S (Nichifu Terminal Industries Co., Ltd.) or 38-S6 (Japan Solderless Terminal Mfg. Co., Ltd.).
② Standard 80-8 crimp-type terminal lugs are too wide, and not suitable for the terminal. Please use CB-type terminal connectors for low-voltage switching devices
(Nichifu Terminal Industries Co., Ltd.) or for molded case circuit breakers (Japan Solderless Terminal Mfg. Co., Ltd.).
③ Contactor side.
④ Thermal overload relay side.
⑤ Use crimp-type terminal connectors.
⑥ PAK-20J's auxiliary circuit (magnetic contactor) is the same as main circuit.

Power supply voltage of the control circuit

The voltage and frequency of the operating circuit should be the same as the rated voltage and frequency of the operating coil. If the voltage is greater than 100% of the rated voltage of the coil, this will result various deterio rations for coil insulation and for mechanical and electrical performances.At the inrush time, if the power supply voltage is less than the minimum operating voltage of contactors, it may cause the coil barning out because of small coil impedance, contact chattering or contact welding.

Application in the circuit exceeding AC380V

When using solderless terminals for the circuit exceeding AC380V, use of solderless terminals with insulation tube is recommended.

Auxiliary contact terminal(NC)

When NC auxiliary contact terminal is inserted into the magnetic contactor, be sure to push the contactor rod insertion.(When the terminal falls out or inspection)

Maintenance

- **Contact tips**

  The contact tips will discolor slightly and become irregular in using, but this will not affect their pertormance. Do not file the tips, as this will shorten their contact life. Contacts should be replaced when the thickness of the contact tips becomes half the size of new ones. All three phases should be replaced at the same time.

- **Core**

  To minimize hum level, contact surfaces of cores are polished to a high degree of flatness and coated with a corrosion-resistant finish. As will as being matched to the shading coil, movable core and fixed core. However, in long-term storage, dirt, iron filings, and rust through humidity on the core surfaces may cause core humming. So appropriate storage conditions are highly requested.

- **Do not lubricate**

  Abrasion of moving parts is very small. The switch is designed to operate with stable characteristics. Lubrication may cause the magnetic contactor to prevent its nomal operations. Please exercise caution, especially when used in oil-operated machinery.

＜Cautions＞

1.When a contact welding is occurred by causes indicated below, there would be the danger such as reckless driving of machines and abnormal heat of the heater. Please use with the commiserations for the safety supposing the failure of making and breaking operations by mechanical rocking or contact welding.
Moreover, the thermal overload relay cannot protect phenomena.
- · Making / Breaking current and operation under use over-spec.
- · Abnormal consumption of contact-tip and the life of contact-tip.
- · Secular variation.
- · Chattering of contact.
- · Instantaneous voltage drop of the power supply.

2.Do not use the contactor removing the cover.
There are dangers of the electric shock, the short-circuit and ets.

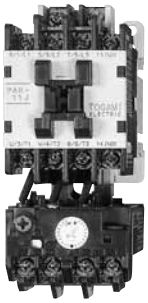

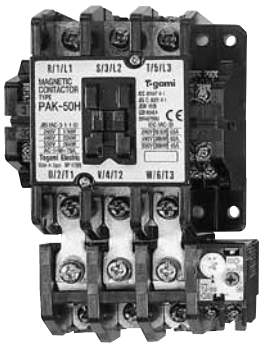

Features

●Standard magnetic contactors & starters

- Pop open the cover for simple contact inspection.
- Can cope through DC 24V 10mA by the adoption of twin contact.
- Realited longer life of 1 million operations（11J～35J, 50H～270H）

●Magnetic starters with phase-failure protection thermal overload relays

Magnetic starters with phase-failure protection thermal overload relays are magnetic starters combined with an phase-failure protection thermal overload relay containing a differential amplifying mechanism. In addition to motor start/stop and protection from overload and locking, they also protect motors from phase-failure protection accidents.
The same as standard magnetic starters, this magnetic starter with phase-failure protection thermal overload relay is easy-to-handle and economical.

●Magnetic starters with 3-heaters thermal overload relays

It protects motor from burnout due to overload and phase-failure.

Ratings, performance and specifications

Item	Page
●Rated capacity and operational current	9, 10
●Application for standard motors	14
●Characteristics and performance	15
●Auxiliary contact ratings	10
●Operating coil ratings	11
●Conforming wire size and tightening torque	27
●Thermal overload relays	73

Model explanation

●Standard magnetic contactors & starters

PAK — 20 JT 20 — A C

Type
PAK ···Non-reversing model

Model	
J	H
6 300	50 270
11 400	65
12 600	80
20 800	95
21	100
26	125
35	150
50	220

J	H	Specifications
J	H	Magnetic contactor① (without enclosure)
JT	HT	Magnetic starter (without enclosure)
JM	HM	Magnetic starter (with enclosure)
JB	HB	Magnetic contactor (with enclosure)

Note. ①Only PAK-6J accompanies "c" at the end of model name.

Aux. contact configuration
PAK-6JC, 11J 12J, 20J
Blank·····1NO
31·····1NC
PAK-21J
Blank·····1NO1NC
20·····2NO
02·····2NC
PAK-26J~270H
Blank·····2NO2NC
PAK-300, 400J
Blank·····3NO3NC
PAK-600, 800J
Blank·····4NO4NC

Options ②
A···Ammeter
D···Push button

Note. ②Only with enclosure

Career mark
Only magnetic starter However, except for 50J, 95H, 270H 300J~600J models.

●Magnetic starters with phase-failure protection thermal overload relays

PAK — 20 JGT 20 — A C

Type
PAK ···Non-reversing model

Model	
J	H
6 300	50 270
11 400	65
12 600	80
20	95
21	100
26	125
35	150
50	220

J	H	Specifications
JGT	HGT	Magnetic Starter (without enclosure)
JGM	HGM	Magnetic Starter (with enclosure)

Auxiliary contact configuration
PAK-6JC, 11J, 12J, 20J
Blank·····1NO
31·····1NC
PAK-21J
Blank·····1NO1NC
20·····2NO
02·····2NC
PAK-26J~270H
Blank·····2NO2NC
PAK-300, 400J
Blank·····3NO3NC
PAK-600J
Blank·····4NO4NC

Options
A···Ammeter
D···Push button

Note. Only with enclosure

Career mark
Except for 50J, 95H, 270H, 300J~600J models.

●Magnetic starters with 3-heaters thermal overload relays

PAK — 20 JT 20 — 3 A C

Type
PAK ···Non-reversing model

Model	
J	H
6	50
11	65
12	80
20	95
21	100
26	125
35	150
50	220
	270

J	H	Specifications
JT	HT	Magnetic starter (without enclosure)
JM	HM	Magnetic starter (with enclosure)

Auxiliary contact configuration
PAK-6JC, 11J, 12J, 20J
Blank·····1NO
31·····1NC
PAK-21J
Blank·····1NO1NC
20·····2NO
02·····2NC
PAK-26J~270H
Blank·····2NO2NC

Options
A···Ammeter
D···Push button

Note. Only with enclosure

Career mark
Except for 50J, 95H, 270H models.

6 J

PAK-6JC PAK-6JTC

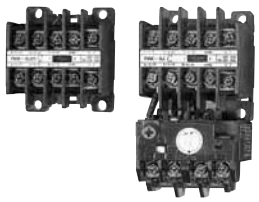

Ratings

Frame			6J
Rated capacity	AC-3 (kW)	240V	2.2
		440V	4
		550V	4
	AC-1 (A) (500,000 ops)	240V	15
		440V	15
		550V	15

Conforming wire size and tightening torque

		Screw size	Conforming wire size	Applicable terminal connector	Tightening torque N·m(kgf·cm)
Contactor	Main circuit	M3.5	φ1～2 0.5～2mm²	1.25－3.5 ～ 2－3.5	0.8～1.2 (8～12)
	Control circuit				
Thermal overload relay	Main circuit	M4	φ1～2 0.5～5.5mm²	1.25－4 ～ 5.5－4	1.2～1.8 (12～18)
	Control circuit	M3.5	φ1～2 0.5～2mm²	1.25－3.5 ～ 2－3.5	0.8～1.2 (8～12)

Magnetic contactor (open type) PAK-6JC

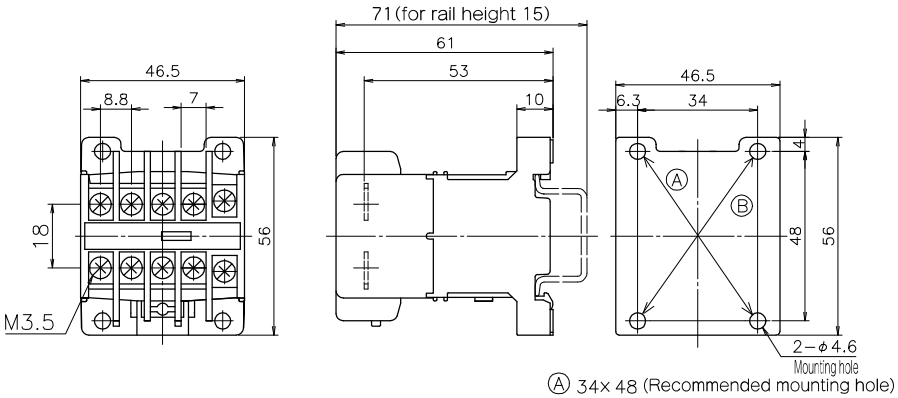

Ⓐ 34× 48 (Recommended mounting hole)
Ⓑ 34× 48 (Compatible with PAK-6H)

Auxiliary contact	Contact configuration
1NO	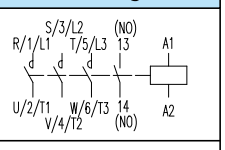
1NC	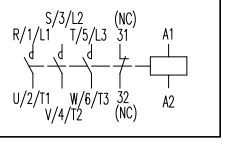

Weight 6JC=0.17kg

Magnetic starter (open type) PAK-6JTC · 6JT-3C · 6JGTC

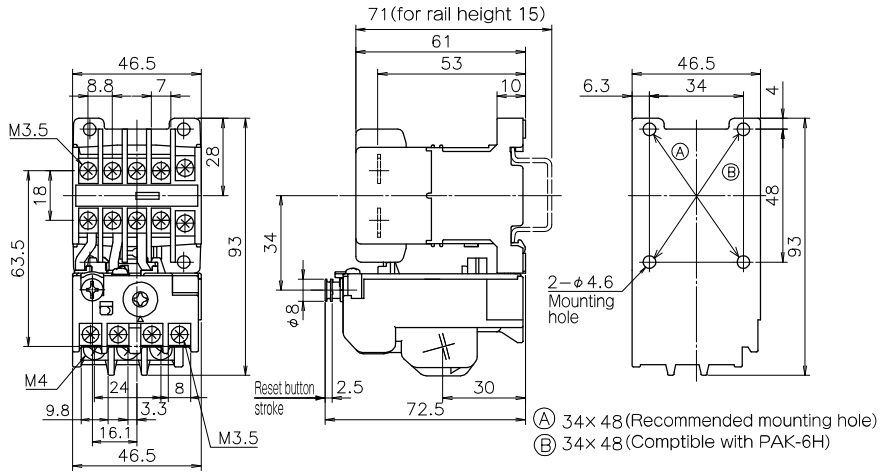

Ⓐ 34× 48 (Recommended mounting hole)
Ⓑ 34× 48 (Comptible with PAK-6H)

Auxiliary contact	Contact configuration
1NO	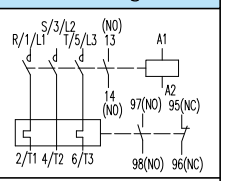
1NC	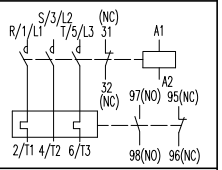
For 3-heaters and phase-failure protection	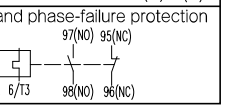

Weight 6JT=0.29kg

Magnetic starter · contactor (enclosed type) PAK-6JMC(JB) · 6JM-3C · 6JGMC

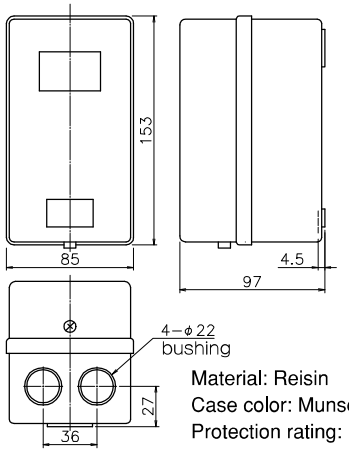

Material: Reisin
Case color: Munsel No. 5Y7/1
Protection rating: IP20

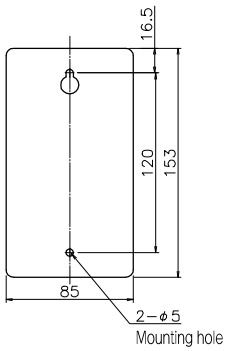

Weight 6JMC=0.45kg
6JB=0.34kg

Connection diagram

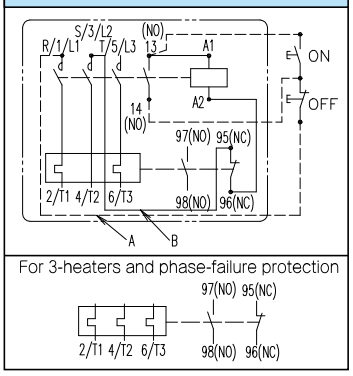

Dashed lines are not connected.
Above diagram is for magnetic starter.

①If operating from other power source, remove "B", and connect power supply to #95 and "A" on the pushbutton terminal.

11J・12J

PAK-11J·12J PAK-11JTC·12JTC

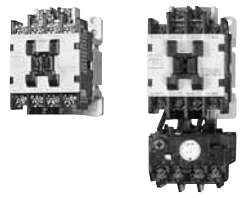

Ratings

Frame			11J	12J
Rated capacity	AC-3 (kW)	240V	3.7	4
		440V	4.5	5.5
		550V	4.5	5.5
	AC-1 (A) (500,000 ops)	240V	20	26
		440V	20	26
		550V	20	26

Conforming wire size and tightening torque

		Screw size	Conforming wire size	Applicable terminal connector	Tightening torque N·m(kgf·cm)
Contactor	Main circuit	M3.5	φ1～2 0.5～2mm²	1.25－3.5 ～ 2－3.5	0.8～1.2 (8～12)
	Control circuit				
Thermal overload relay	Main circuit	M4	φ1～2 0.5～5.5mm²	1.25－4 ～ 5.5－4	1.2～1.8 (12～18)
	Control circuit	M3.5	φ1～2 0.5～2mm²	1.25－3.5 ～ 2－3.5	0.8～1.2 (8～12)

Magnetic contactor (open type) PAK-11J・12J

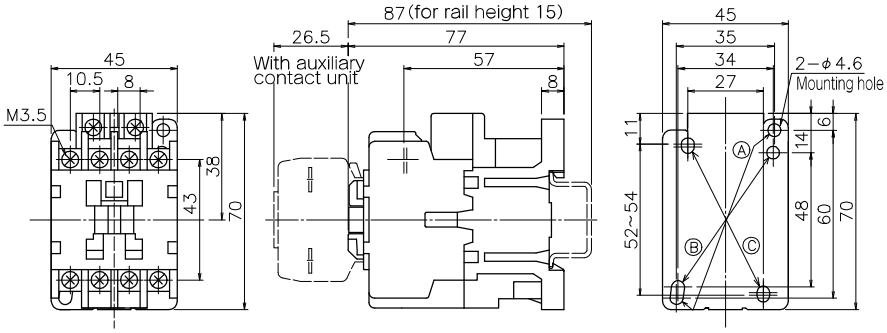

Ⓐ 35×60 (Recommended mounting hole)
Ⓑ 34×48 (compatible with PAK-6H,11H,11HK)
Ⓒ 27×52～54

Auxiliary contact	Contact configuration
1NO	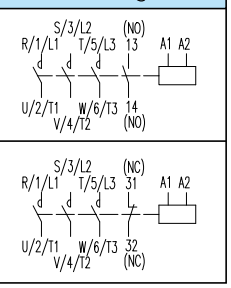
1NC	

Weight 11J・12J=0.3kg

Magnetic starter (open type) PAK-11JTC・12JTC・11JT-3C・12JT-3C・11JGTC・12JGTC

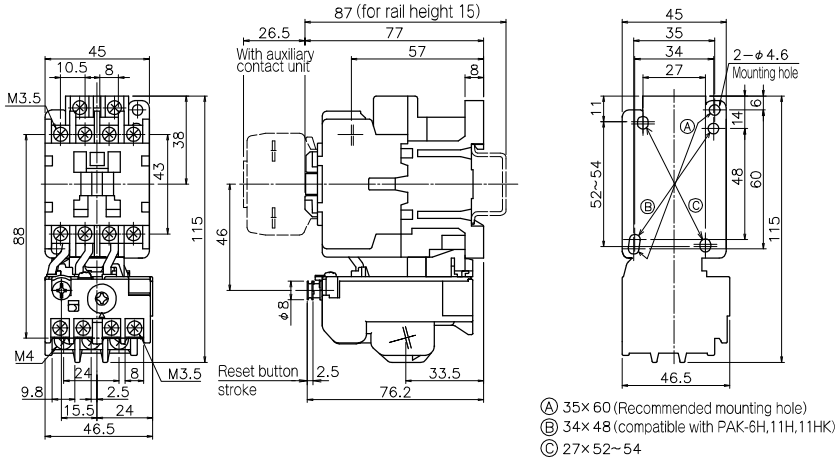

Ⓐ 35×60 (Recommended mounting hole)
Ⓑ 34×48 (compatible with PAK-6H,11H,11HK)
Ⓒ 27×52～54

Auxiliary contact	Contact configuration
1NO	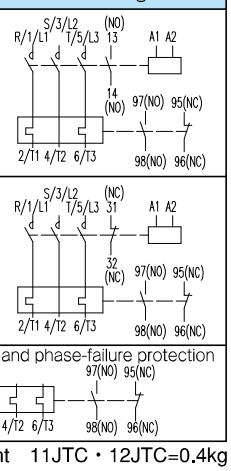
1NC	
For 3-heaters and phase-failure protection	

Weight 11JTC・12JTC=0.4kg

Magnetic starter・contactor (enclosed type) PAK-11JMC(JB)・12JMC(JB)・11JM-3C・12JM-3C・11JGMC・12JGMC

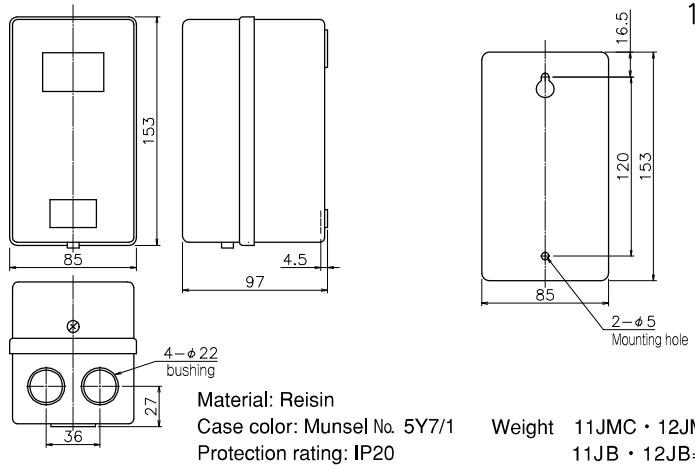

Connection diagram

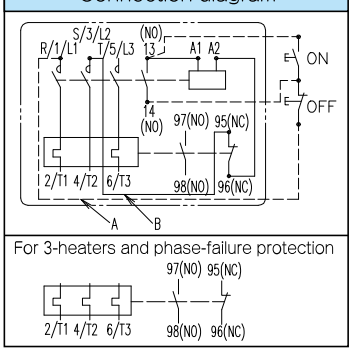

Material: Reisin
Case color: Munsel No. 5Y7/1
Protection rating: IP20

Weight 11JMC・12JMC=0.57kg
11JB・12JB=0.46kg

Dashed lines are not connected.
Above diagram is for magnetic starter.

①If operating from other power source, remove "B", and connect power supply to #95 and "A" on the pushbutton terminal.

2

20J

PAK-20J PAK-20JTC

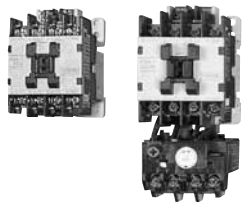

Ratings

Frame			20J
Rated capacity	AC-3 (kW)	240V	7.5
		440V	11
		550V	11
	AC-1 (A) (500,000 ops)	240V	32
		440V	32
		550V	32

Conforming wire size and tightening torque

		Screw size	Conforming wire size	Applicable terminal connector	Tightening torque N·m(kgf·cm)
Contactor	Main cir. Aux cir.	M4	φ1~2 0.5~5.5mm²	1.25-4 ~ 5.5-4	1.2~1.8 (12~18)
	Control circuit	M3.5	φ1~1.6 0.5~2mm²	1.25-3.5 ~ 2-3.5	0.8~1.2 (8~12)
Thermal overload relay	Main circuit	M4	φ1~2 0.5~5.5mm²	1.25-4 ~ 5.5-4	1.2~1.8 (12~18)
	Control circuit	M3.5	φ1~1.6 0.5~2mm²	1.25-3.5 ~ 2-3.5	0.8~1.2 (8~12)

Magnetic contactor (open type) PAK-20J

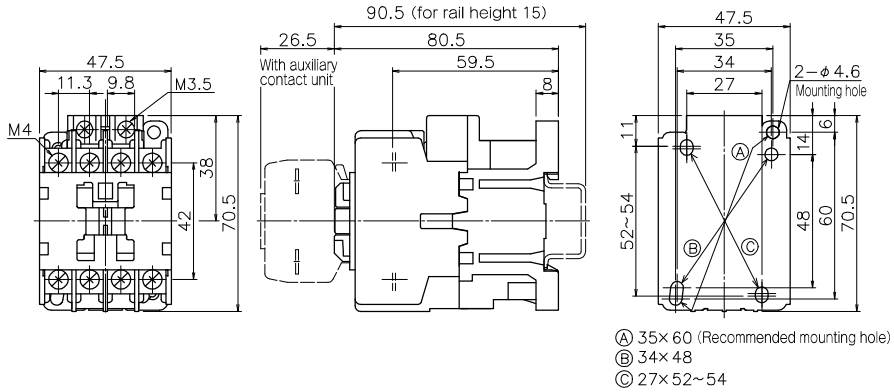

Auxiliary contact	Contact configuration
1NO	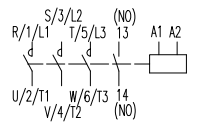
1NC	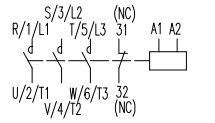

Weight 20J=0.32kg

Magnetic starter (open type) PAK-20JTC · 20JT-3C · 20JGTC

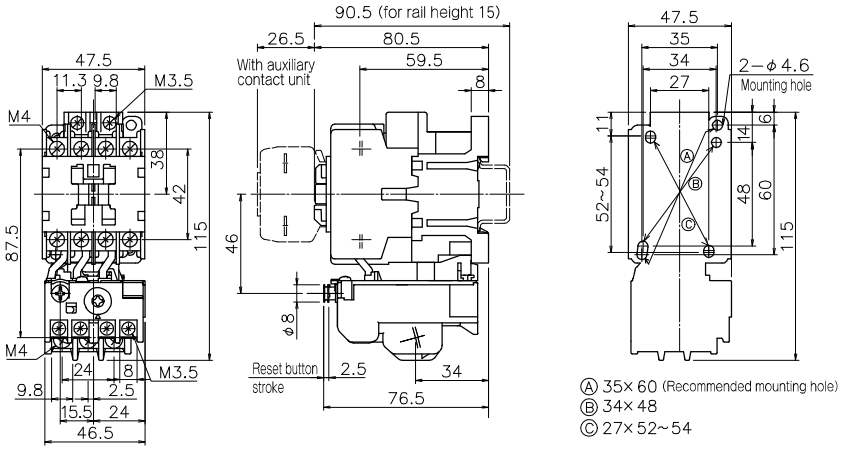

Auxiliary contact	Contact configuration
1NO	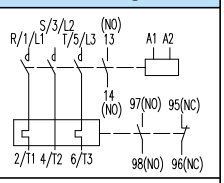
1NC	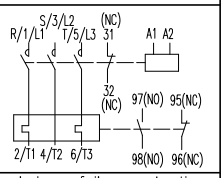
For 3-heaters and phase-failure protection	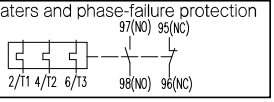

Weight 20JTC=0.42kg

Magnetic starter · contactor (enclosed type) PAK-20JMC(JB) · 20JM-3C · 20JGMC

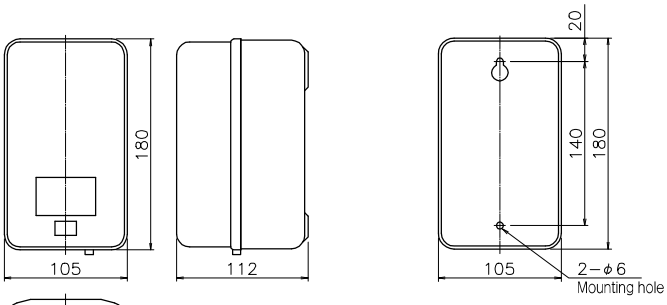

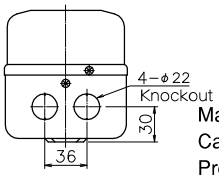

Material: Steel plate
Case color: Munsel No. 5Y7/1
Protection rating: IP20

Weight 20JMC=0.91kg
20JB=0.8kg

Connection diagram

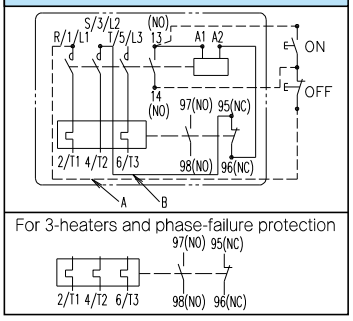

Dashed lines are not connected.
Above diagram is for magnetic starter.

①If operating from other power source, remove "B", and connect power supply to #95 and "A" on the pushbutton terminal.

21J

PAK-21J PAK-21JTC

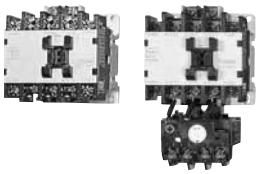

Ratings

Frame			21J
Rated capacity	AC-3 (kW)	240V	7.5
		440V	11
		550V	11
	AC-1 (A) (500,000 ops)	240V	32
		440V	32
		550V	32

Conforming wire size and tightening torque

		Screw size	Conforming wire size	Applicable terminal connector	Tightening torque N·m(kgf·cm)
Contactor	Main circuit	M4	φ1~2 0.5~5.5mm²	1.25-4 ~ 5.5-4	1.2~1.8 (12~18)
	Control circuit	M3.5	φ1~1.6 0.5~2mm²	1.25-3.5 ~ 2-3.5	0.8~1.2 (8~12)
Thermal overload relay	Main circuit	M4	φ1~2 0.5~5.5mm²	1.25-4 ~ 5.5-4	1.2~1.8 (12~18)
	Control circuit	M3.5	φ1~1.6 0.5~2mm²	1.25-3.5 ~ 2-3.5	0.8~1.2 (8~12)

Magnetic contactor (open type) PAK-21J

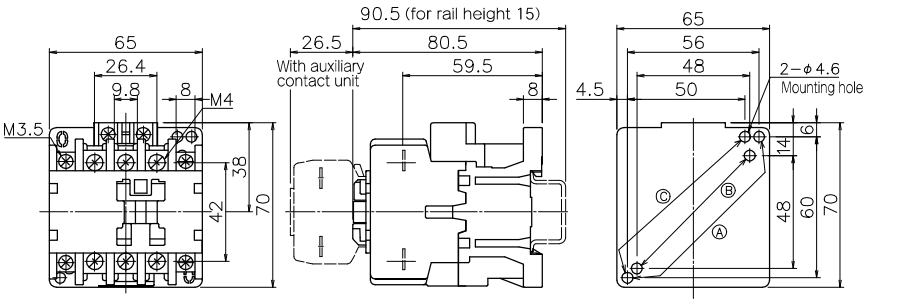

Ⓐ 56× 60 (compatible with PAK-20H) (Recommended mounting hole)
Ⓑ 48× 48 (compatible with PAK-12H,18H)
Ⓒ 50× 60

Auxiliary contact	Contact configuration
1NO1NC	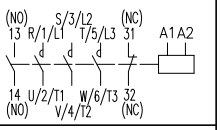
2NO	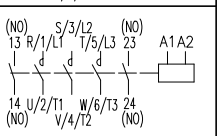
2NC	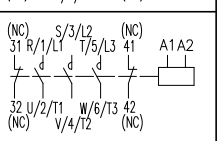

Weight 21J=0.36kg

Magnetic starter (open type) PAK-21JTC · 21JT-3C · 21JGTC

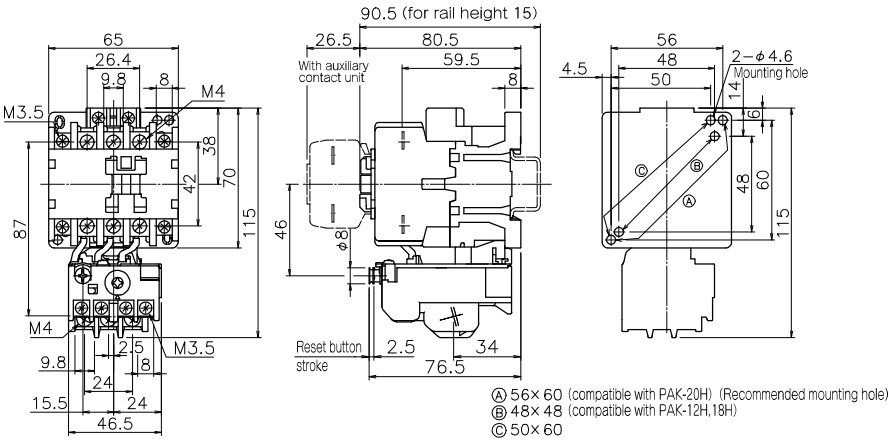

Ⓐ 56× 60 (compatible with PAK-20H) (Recommended mounting hole)
Ⓑ 48× 48 (compatible with PAK-12H,18H)
Ⓒ 50× 60

Auxiliary contact	Contact configuration
1NO1NC	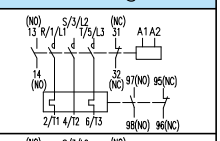
2NO	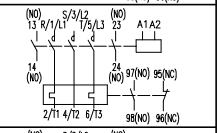
2NC	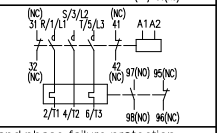
For 3-heaters and phase-failure protection	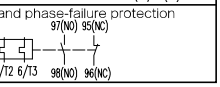

Weight 21JTC=0.47kg

Magnetic starter · contactor (enclosed type) PAK-21JMC(JB) · 21JM-3C · 21JGMC

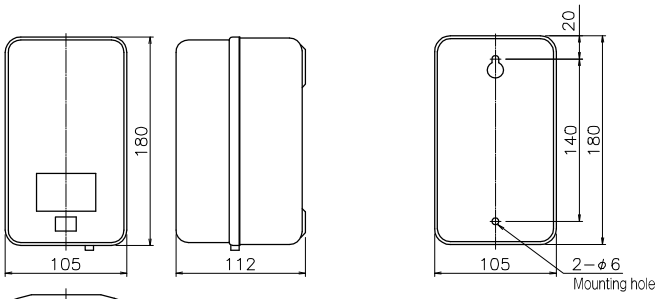

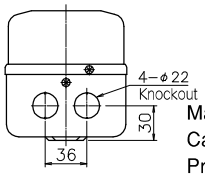

Material: Steel plate
Case color: Munsel No. 5Y7/1 Weight 21JMC=1.05kg
Protection rating: IP20 21JB=0.94kg

Connection diagram

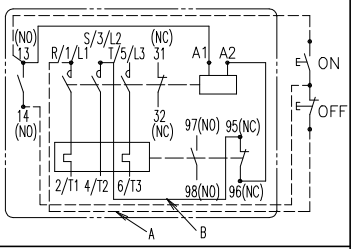

For 3-heaters and phase-failure protection

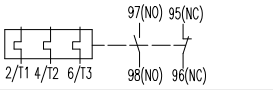

Dashed lines are not connected.
Above diagram is for magnetic starter.

①If operating from other power source, remove "B", and connect power supply to #95 and "A" on the pushbutton terminal.

Non-Reversing Model

26J・35J・50J

PAK-26J·35J·50J PAK-26JTC·35JTC·50JT

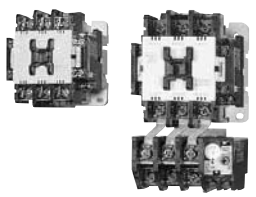

Ratings

Frame			26J	35J	50J
Rated capacity	AC-3 (kW)	240V	10	15	18.5
		440V	20	26	30
		550V	20	26	30
	AC-1 (A) (500,000 ops)	240V	50	60	65
		440V	50	60	65
		550V	50	60	65

Conforming wire size and tightening torque

		Screw size	Conforming wire size	Applicable terminal connector	Tightening torque N·m(kgf·cm)
Contactor	Main circuit	M5	φ1.6~3.2 1.25~14mm²	1.25-5 ~ 14-5	2.4~3.5 (24~36)
	Control circuit	M3.5	φ1~1.6 0.5~2mm²	1.25-3.5 ~ 2-3.5	0.8~1.2 (8~12)
Thermal overload relay	Main circuit	M5	φ1.6~3.2 1.25~14mm²	1.25-5 ~ 14-5	2.4~3.5 (24~36)
	Control circuit	M3.5	φ1~1.6 0.5~2mm²	1.25-3.5 ~ 2-3.5	0.8~1.2 (8~12)

Magnetic contactor (open type) PAK-26J・35J・50J

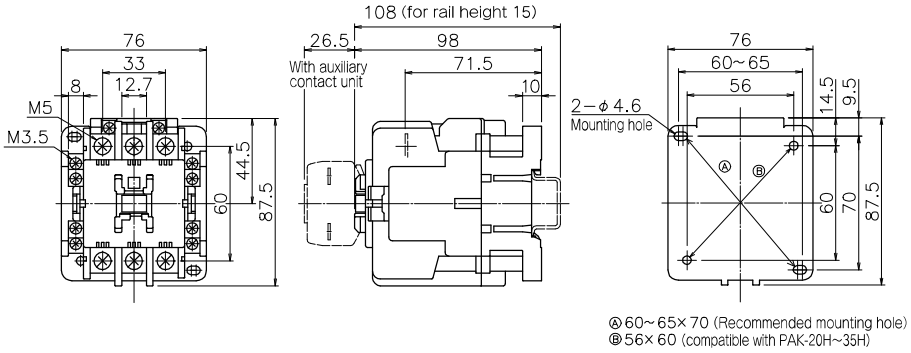

Contact configuration

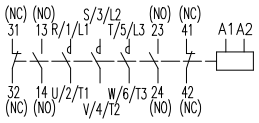

Weight 26J・35J・50J=0.68kg

Magnetic starter (open type) PAK-26JTC・35JTC・50JT・26JT-3C・35JT-3C・50JT-3・26JGTC・35JGTC・50JGT

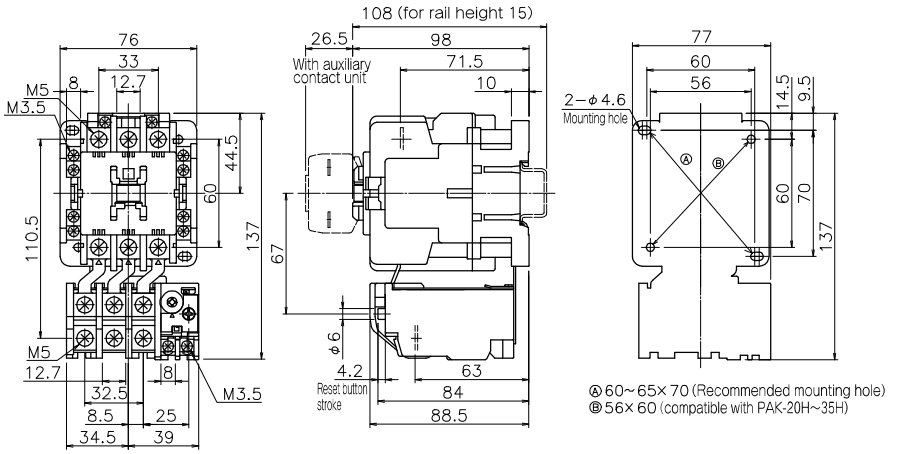

Contact configuration

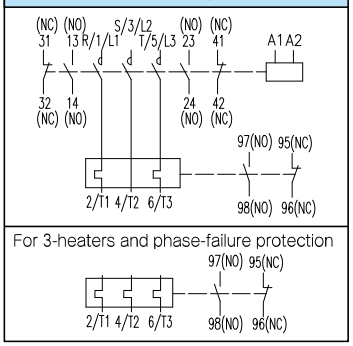

Weight 26JTC・35JTC・50JT=0.91kg

Magnetic starter·contactor(enclosed type) PAK-26JMC(JB)·35JMC(JB)·50JM(JB)·26JM-3C·35JM-3C·50JM-3C·26JGMC·35JGMC·50JGM

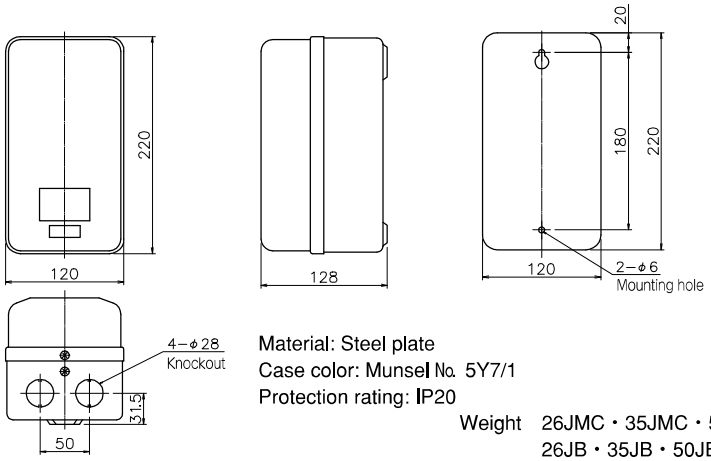

Material: Steel plate
Case color: Munsel No. 5Y7/1
Protection rating: IP20

Weight 26JMC・35JMC・50JM=1.86kg
26JB・35JB・50JB=1.63kg

Connection diagram

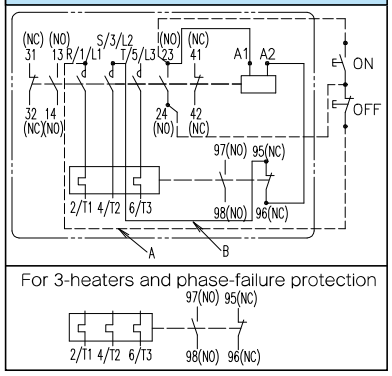

Dashed lines are not connected.
Above diagram is for magnetic starter.

①If operating from other power source, remove "B", and connect power supply to #95 and "A" on the pushbutton terminal.

Non-Reversing Model

50H·65H

PAK-50H·65H PAK-50HTC·65HTC

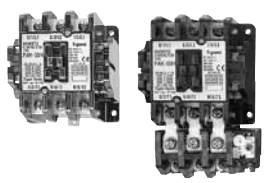

Ratings

Frame			50H	65H
Rated capacity	AC-3 (kW)	240V	18.5	22
		440V	30	37
		550V	30	37
	AC-1 (A) (500,000 ops)	240V	75	90
		440V	75	90
		550V	75	90

Conforming wire size and tightening torque

		Screw size	Conforming wire size	Applicable terminal connector	Tightening torque N·m(kgf·cm)
Contactor	Main circuit	M6	2 ~38mm² Using crimped terminals	2-6 ~ 38-6S	3.9~5.9 (40~60)
	Control circuit	M3.5	φ1~1.6 0.5~2mm²	1.25-3.5 ~ 2-3.5	0.8 ~1.2 (8~12)
Thermal overload relay	Main circuit	M6	2 ~38mm² Using crimped terminals	2-6 ~ 38-6S	3.9~5.9 (40~60)
	Control circuit	M3.5	φ1~1.6 0.5~2mm²	1.25-3.5 ~ 2-3.5	0.8 ~1.2 (8~12)

Magnetic contactor (open type) PAK-50H · 65H

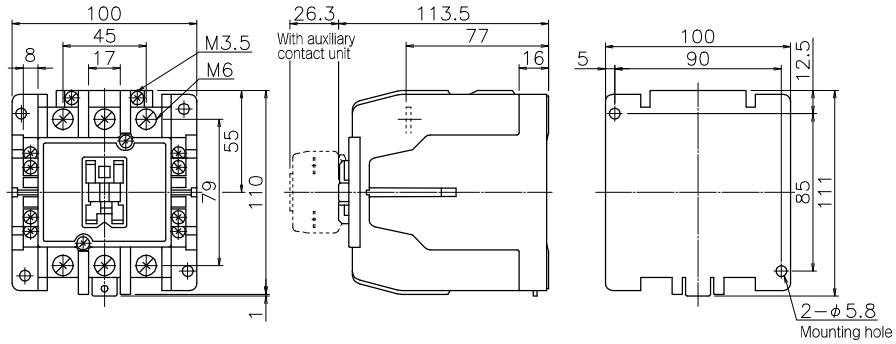

Contact configuration

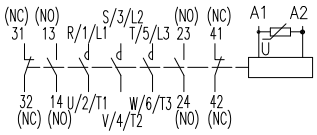

Weight 50H=1.3kg, 65H=1.5kg

Magnetic starter (open type) PAK-50HTC · 65HTC · 50HT-3C · 65HT-3C · 50HGTC · 65HGTC

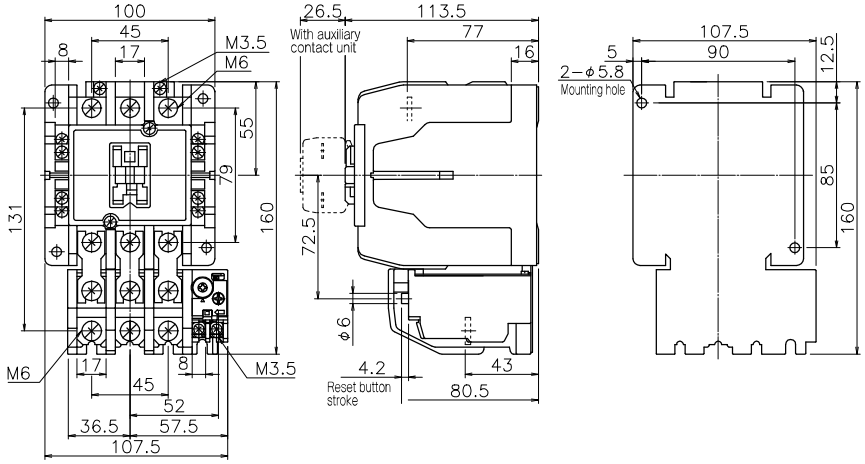

Contact configuration

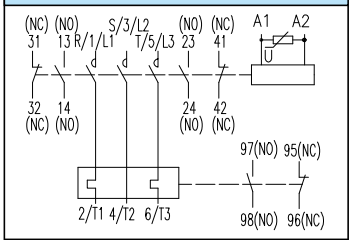

For 3-heaters and phase-failure protection

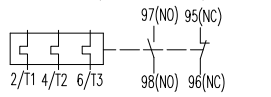

Weight 50HTC=1.7kg, 65HTC=1.9kg

Magnetic starter · contactor (enclosed type) PAK-50HMC(HB) · 65HMC(HB) · 50HM-3C · 65HM-3C · 50HGMC · 65HGMC

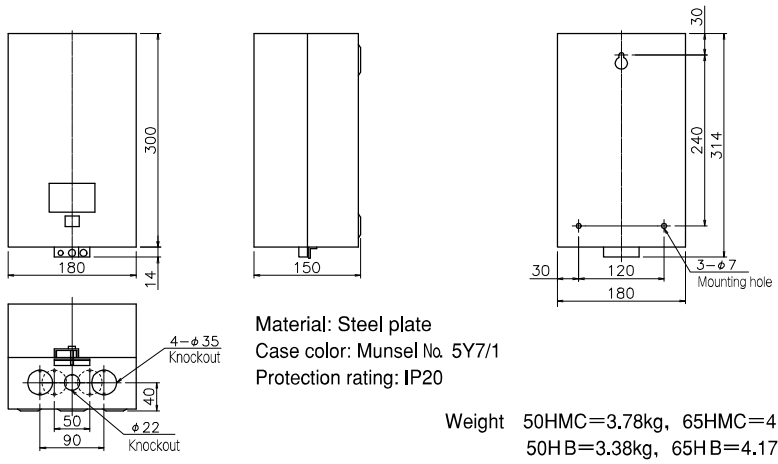

Material: Steel plate
Case color: Munsel No. 5Y7/1
Protection rating: IP20

Weight 50HMC=3.78kg, 65HMC=4.57kg
50HB=3.38kg, 65HB=4.17kg

Connection diagram

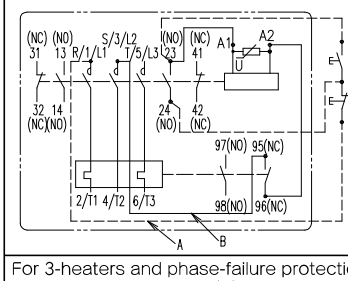

For 3-heaters and phase-failure protection

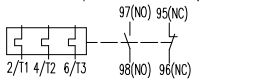

Dashed lines are not connected.
Above diagram is for magnetic starter.

①If operating from other power source, remove "B", and connect power supply to #95 and "A" on the pushbutton terminal.

Non-Reversing Model

80H

PAK-80H·95H PAK-80HTC·95HT

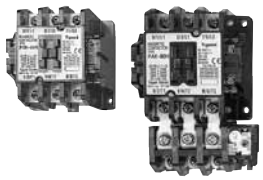

Ratings

Frame			80H	95H
Rated capacity	AC-3 (kW)	240V	25	27
		440V	45	55
		550V	45	55
	AC-1 (A) (500,000 ops)	240V	110	110
		440V	110	110
		550V	110	110

Conforming wire size and tightening torque

		Screw size	Conforming wire size	Applicable terminal connector	Tightening torque N·m(kgf·cm)
Contactor	Main circuit	M6	2 ~38mm² Using crimped terminals	2-6 ~ 38-6S	3.9 ~5.9 (40~60)
	Control circuit	M3.5	φ1~1.6 0.5~2mm²	1.25-3.5 ~ 2-3.5	0.8~1.2 (8~12)
Thermal overload relay	Main circuit	M6	2 ~38mm² Using crimped terminals	2-6 ~ 38-6S	3.9 ~5.9 (40~60)
	Control circuit	M3.5	φ1~1.6 0.5~2mm²	1.25-3.5 ~ 2-3.5	0.8~1.2 (8~12)

Magnetic contactor (open type) PAK-80H · 95H

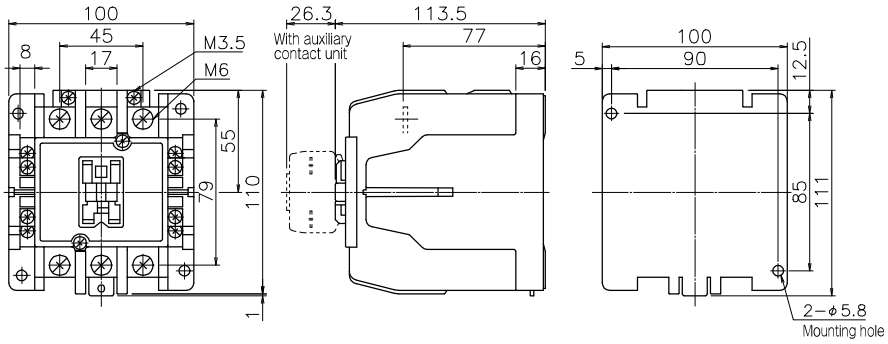

Contact configuration

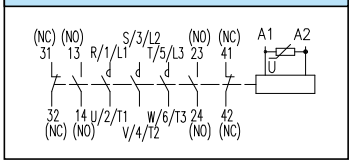

Weight 80H・90H=1.5kg

Magnetic starter (open type) PAK-80HTC · 95HT · 80HT-3C · 90HT-3 · 80HGTC · 90HGT

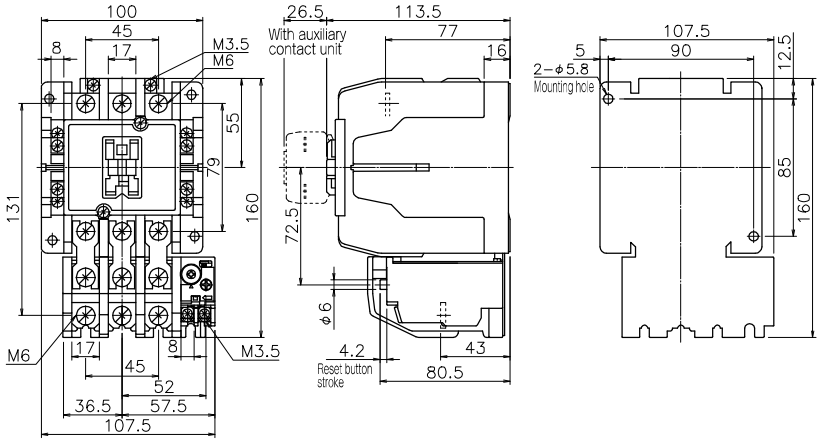

Contact configuration

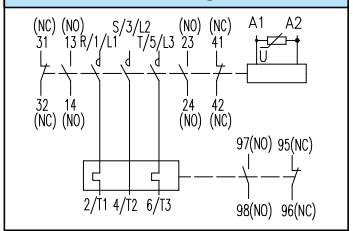

For 3-heaters and phase-failure protection

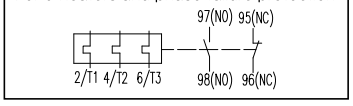

Weight 80HTC・95HT=1.9kg

Magnetic starter · contactor (enclosed type) PAK-80HMC(HB) · 95HM(HB) · 80HM-3C · 95HM-3 · 80HGMC · 95HGM

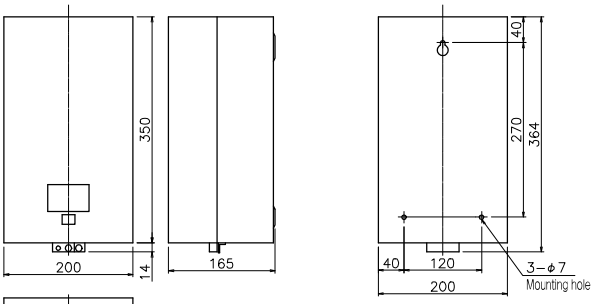

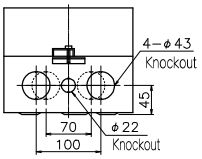

Material: Steel plate
Case color: Munsel No. 5Y7/1
Protection rating: IP20

Weight 80HMC・95HM=4.57kg
80HB・95HB=4.17kg

Connection diagram

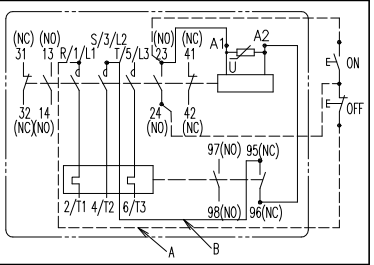

For 3-heaters and phase-failure protection

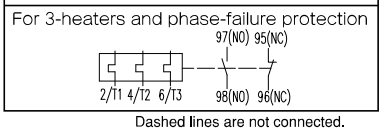

Dashed lines are not connected.
Above diagram is for magnetic starter.

①If operating from other power source, remove "B", and connect power supply to #95 and "A" on the pushbutton terminal.

100H

PAK-100H PAK-100HTC

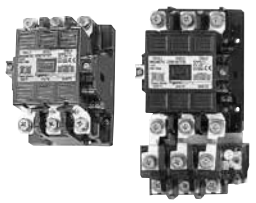

Ratings

Frame			100H
Rated capacity	AC-3 (kW)	240V	37
		440V	55
		550V	55
	AC-1 (A) (500,000 ops)	240V	150
		440V	150
		550V	150

Conforming wire size and tightening torque

		Screw size	Conforming wire size	Applicable terminal connector	Tightening torque N·m(kgf·cm)
Contactor	Main circuit	M8	2～80mm² Using crimped terminals	2-8 ～ CB80-8	9.0 ～13.5 (92～138)
	Control circuit	M3.5	φ1～1.6 0.5～2mm²	1.25-3.5 ～ 2-3.5	0.8 ～1.2 (8 ～12)
Thermal overload relay	Main circuit	M8	2～80mm² Using crimped terminals	2-8 ～ CB80-8	9.0 ～13.5 (92～138)
	Control circuit	M3.5	φ1～1.6 0.5～2mm²	1.25-3.5 ～ 2-3.5	0.8 ～1.2 (8 ～12)

Magnetic contactor (open type) PAK-100H

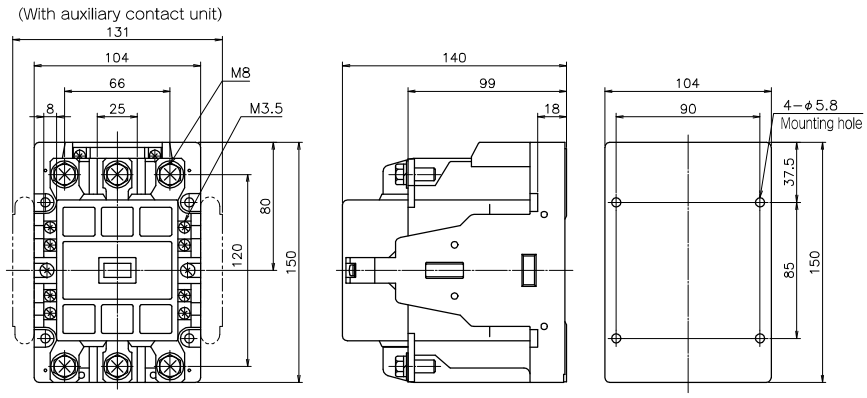

Contact configuration

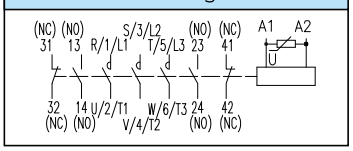

Weight 2.9kg

Magnetic starter (open type) PAK-100HTC · 100HT-3C · 100HGTC

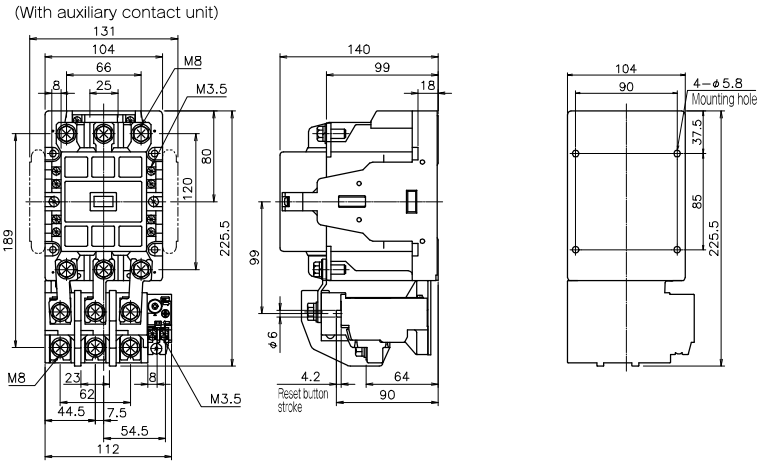

Contact configuration

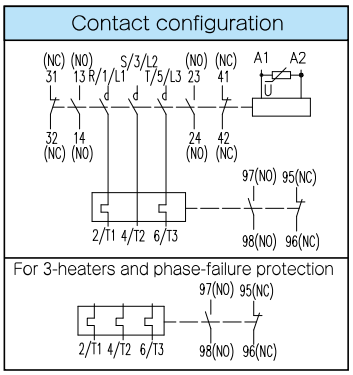

Weight 3.7kg

Magnetic starter · contactor (enclosed type) PAK-100HMC(HB) · 100HM-3C · 100HGMC

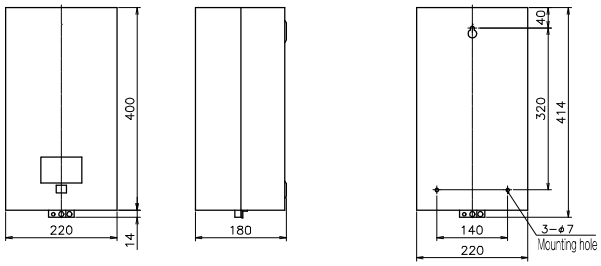

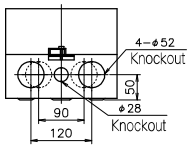

Material: Steel plate
Case color: Munsel No. 5Y7/1
Protection rating: IP20

Weight 100HMC=7.8kg
100HB=7.0kg

Connection diagram

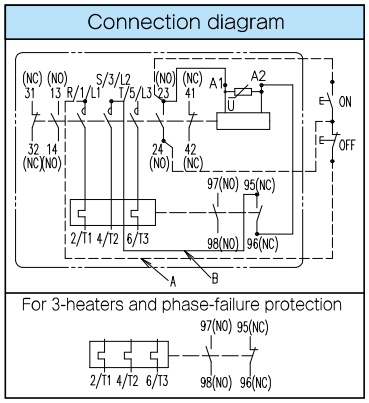

Dashed lines are not connected.
Above diagram is for magnetic starter.

①If operating from other power source, remove "B", and connect power supply to #95 and "A" on the pushbutton terminal.

125H

PAK-125H PAK-125HTC

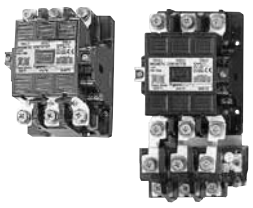

Ratings

Frame			125H
Rated capacity	AC-3 (kW)	240V	45
		440V	60
		550V	70
	AC-1 (A) (500,000 ops)	240V	170
		440V	170
		550V	170

Conforming wire size and tightening torque

		Screw size	Conforming wire size	Applicable terminal connector	Tightening torque N·m(kgf·cm)
Contactor	Main circuit	M8	2～80mm² Using crimped terminals	2-8 ~ CB80-8	9.0 ～13.5 (92～138)
	Control circuit	M3.5	φ1～1.6 0.5～2mm²	1.25-3.5 ~ 2-3.5	0.8 ～1.2 (8 ～12)
Thermal overload relay	Main circuit	M8	2～80mm² Using crimped terminals	2-8 ~ CB80-8	9.0 ～13.5 (92～138)
	Control circuit	M3.5	φ1～1.6 0.5～2mm²	1.25-3.5 ~ 2-3.5	0.8 ～1.2 (8 ～12)

Magnetic contactor (open type) PAK-125H

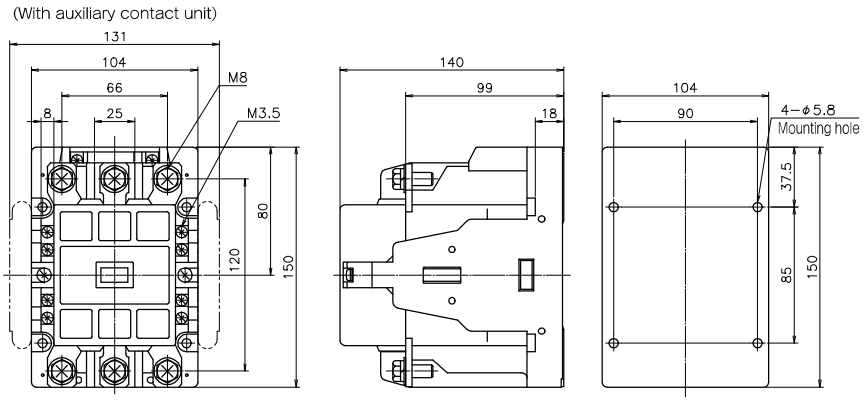

Contact configuration

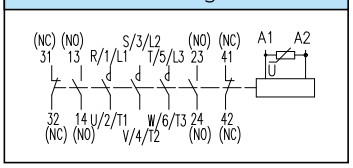

Weight 2.9kg

Magnetic starter (open type) PAK-125HTC · 125HTC-3C · 125HGTC

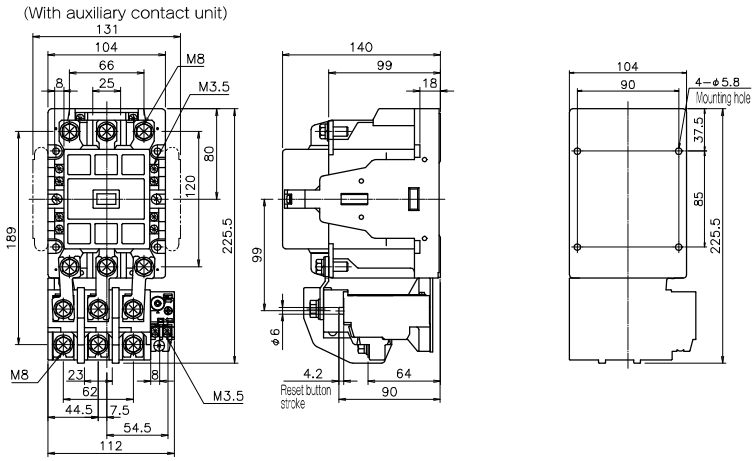

Contact configuration

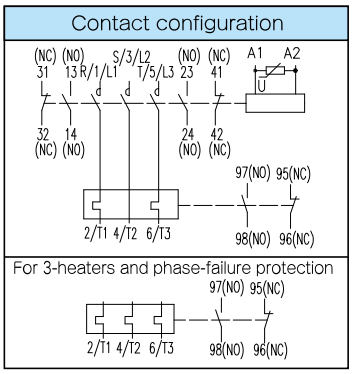

Weight 3.7kg

Magnetic starter · contactor (enclosed type) PAK-125HMC(HB) · 125HM-3C · 125HGMC

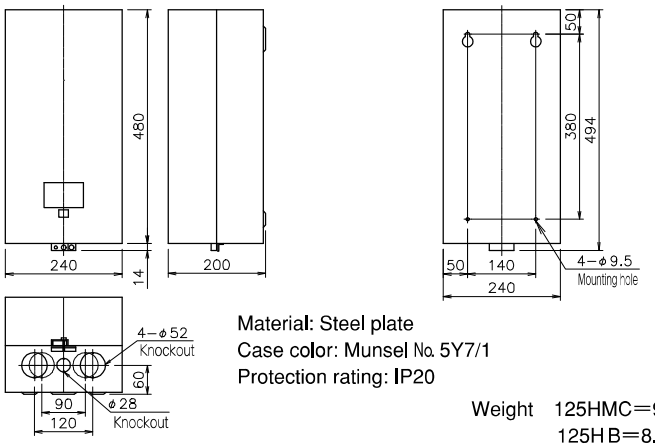

Material: Steel plate
Case color: Munsel No. 5Y7/1
Protection rating: IP20

Weight 125HMC=9.6kg
125HB=8.8kg

Connection diagram

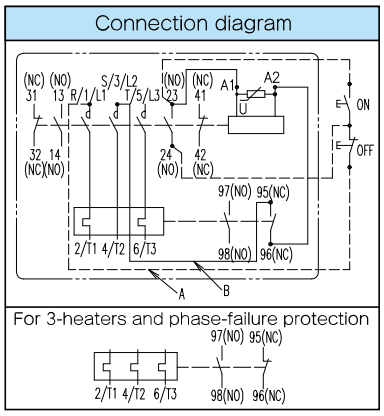

Dashed lines are not connected.
Above diagram is for magnetic starter.

①If operating from other power source, remove "B", and connect power supply to #95 and "A" on the pushbutton terminal.

150H

PAK-150H PAK-150HTC

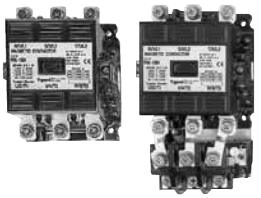

Ratings

Frame			150H
Rated capacity	AC-3 (kW)	240V	60
		440V	75
		550V	75
	AC-1 (A) (500,000 ops)	240V	220
		440V	220
		550V	220

Conforming wire size and tightening torque

		Screw size	Conforming wire size	Applicable terminal connector	Tightening torque N·m(kgf·cm)
Contactor	Main circuit	M8	2～100mm² Using crimped terminals	2-8 ~ CB100-8	9.0～13.5 (92～138)
	Control circuit	M3.5	φ1～1.6 0.5～2mm²	1.25-3.5 ~ 2-3.5	0.8～1.2 (8～12)
Thermal overload relay	Main circuit	M8	2～100mm² Using crimped terminals	2-8 ~ CB100-8	9.0～13.5 (92～138)
	Control circuit	M3.5	φ1～1.6 0.5～2mm²	1.25-3.5 ~ 2-3.5	0.8～1.2 (8～12)

Magnetic contactor (open type) PAK-150H

(With auxiliary contact unit)

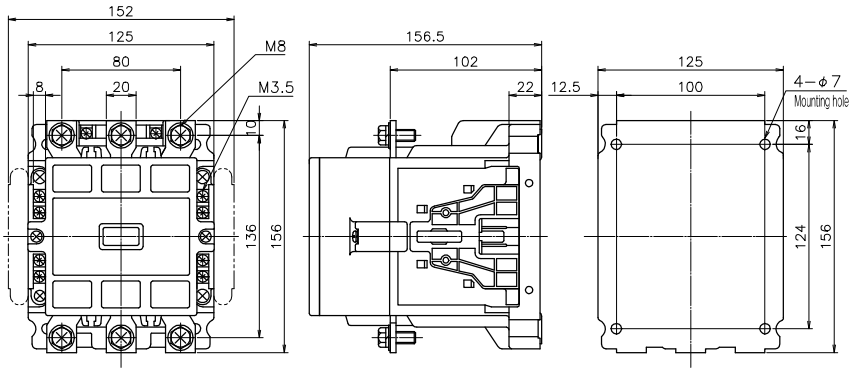

Contact configuration

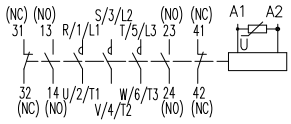

Weight 3.5kg

Magnetic starter (open type) PAK-150HTC · 150HT-3C · 150HGTC

(With auxiliary contact unit)

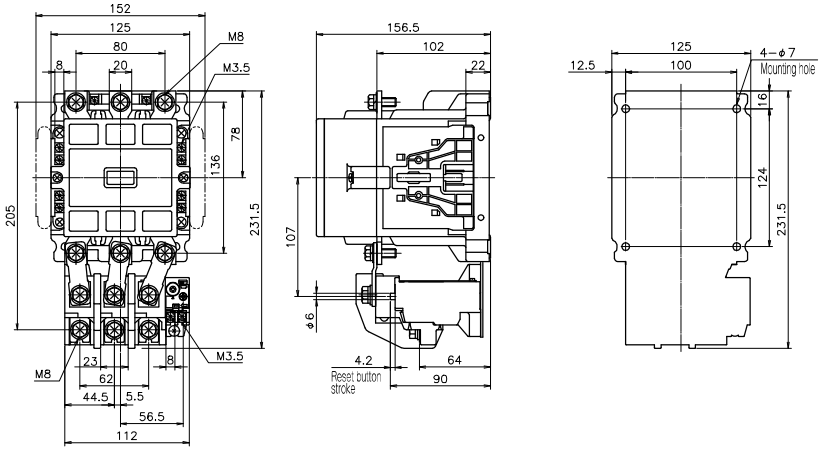

Contact configuration

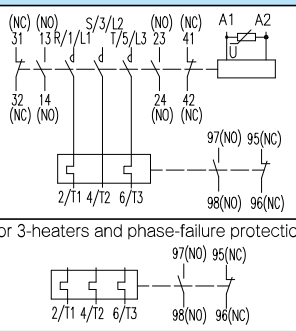

Weight 4.6kg

Magnetic starter · contactor (enclosed type) PAK-150HMC(HB) · 150HM-3C · 150HGMC

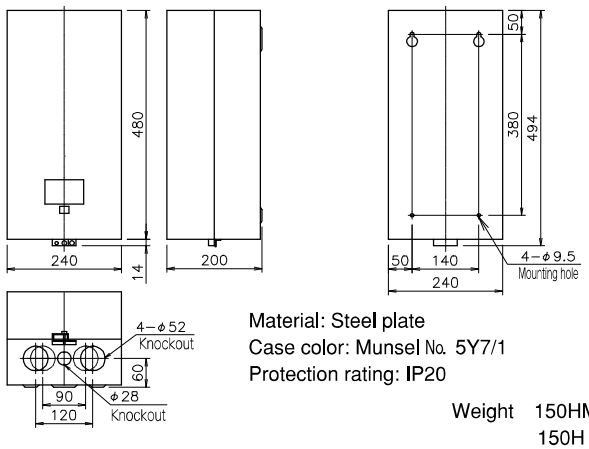

Material: Steel plate
Case color: Munsel No. 5Y7/1
Protection rating: IP20

Weight 150HMC=10.2kg
150HB=9.7kg

Connection diagram

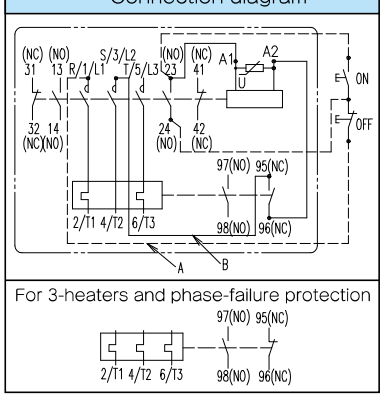

Dashed lines are not connected.
Above diagram is for magnetic starter.

①If operating from other power source, remove "B", and connect power supply to #95 and "A" on the pushbutton terminal.

2

220H・270H

PAK-220H·270H PAK-220HTC·270HT

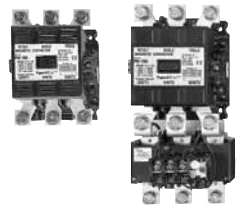

Ratings

Frame			220H	270H
Rated capacity	AC-3 (kW)	240V	80	90
		440V	90	132
		550V	90	132
	AC-1 (A) (500,000 ops)	240V	275	310
		440V	275	310
		550V	275	310

Conforming wire size and tightening torque

		Screw size	Conforming wire size	Applicable terminal connector	Tightening torque N-m(kgf·cm)
Contactor	Main circuit	M10	2～150mm² Using crimped terminals	2-10 ～ 150-10	18.1～27 (185～275)
	Control circuit	M3.5	φ1～1.6 0.5～2mm²	1.25-3.5 ～ 2-3.5	0.8～1.2 (8～12)
Thermal overload relay	Main circuit	M10	2～150mm² Using crimped terminals	2-10 ～ 150-10	18.1～27 (185～275)
	Control circuit	M3.5	φ1～1.6 0.5～2mm²	1.25-3.5 ～ 2-3.5	0.8～1.2 (8～12)

Magnetic contactor (open type) PAK-220H・270H

(With auxiliary contact unit)

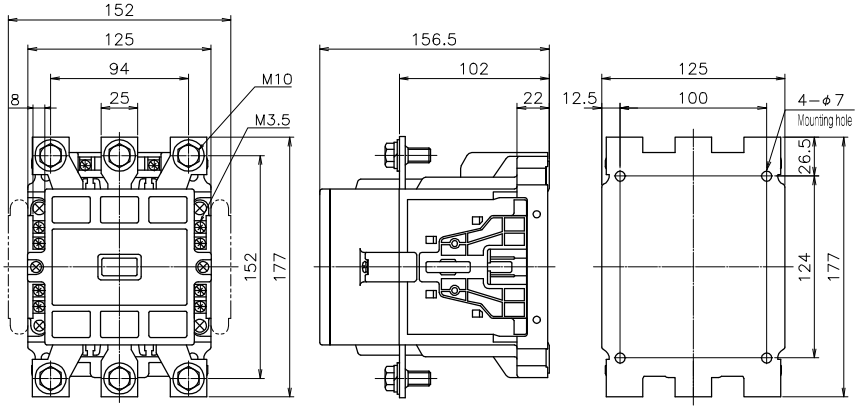

Contact configuration

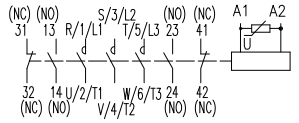

Weight 220H・270H=4.0kg

Magnetic starter (open type) PAK-220HTC・270HT・220HT-3C・270HT-3・220HGTC・270HGT

(With auxiliary contact unit)

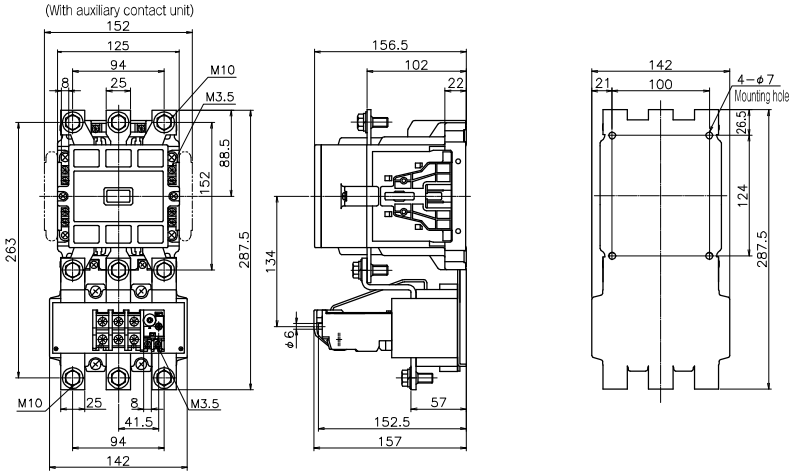

Contact configuration

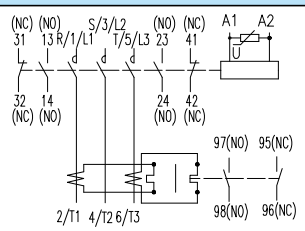

For 3-heaters and phase-failure protection

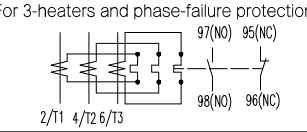

Weight 220HTC・270HT=6.3kg

Magnetic starter (enclosed type) PAK-220HMC(HB)・270HM(HB)・220HM-3C・270HM-3・220HGMC・270HGM

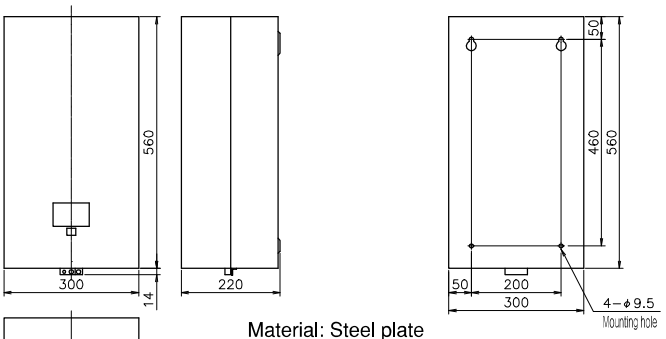

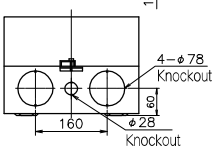

Material: Steel plate
Case color: Munsel No. 5Y7/1
Protection rating: IP20

Weight 220HMC・270HM=13.3kg
220HB・270HB=11.0kg

Connection diagram

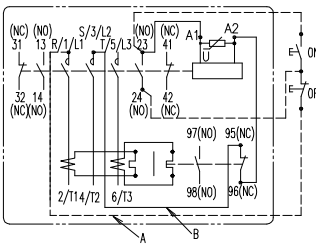

For 3-heaters and phase-failure protection

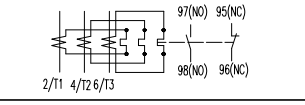

Dashed lines are not connected.
Above diagram is for magnetic starter.

①If operating from other power source, remove "B", and connect power supply to #95 and "A" on the pushbutton terminal.

300J・400J

PAK-300J · 400J PAK-300JT · 400JT

Ratings

Frame			300J	400J
Rated capacity	AC-3 (kW)	220V	90	115
		440V	150	200
		550V	160	200
	AC-1 (A) (500,000 ops)	220V	350	420
		440V	350	420
		550V	—	—

Conforming wire size and tightening torque

		Screw size	Conforming wire size	Applicable terminal connector	Tightening torque N·m(kgf·cm)
Contactor	Main circuit	M12	2～200㎟	2-12 ～ 200-12	35～45 (350～450)
	Control circuit	M3.5	φ1～1.6 0.5～2㎟	1.25-3.5 ～ 2-3.5	0.8～1.0 (8～10)
Thermal overload relay	Main circuit	M12	2～200㎟	2-12 ～ 200-12	35～45 (350～450)
	Control circuit	M3.5	φ1～1.6 0.5～2㎟	1.25-3.5 ～ 2-3.5	0.8～1.0 (8～10)

Magnetic contactor (open type) PAK-300J · 400J

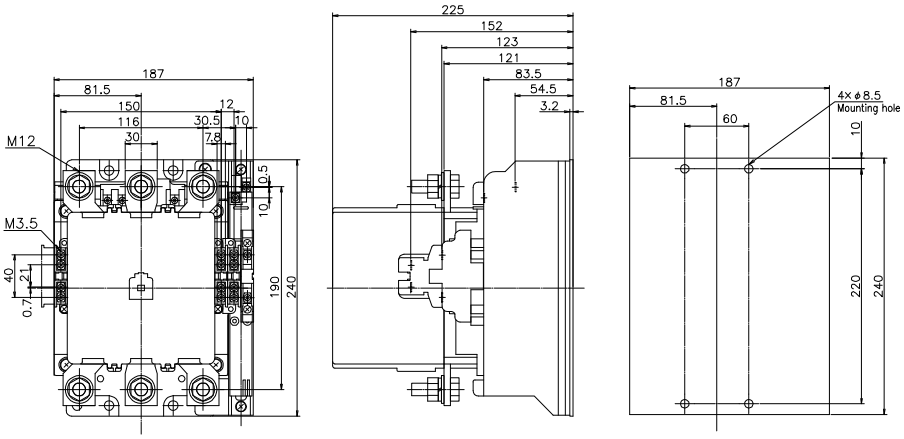

Contact configuration

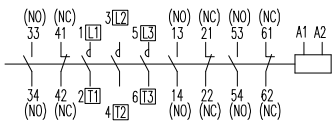

Weight 300J・400J=9.7kg

Magnetic starter (open type) PAK-300JT · 400JT · 300JGT · 400JGT

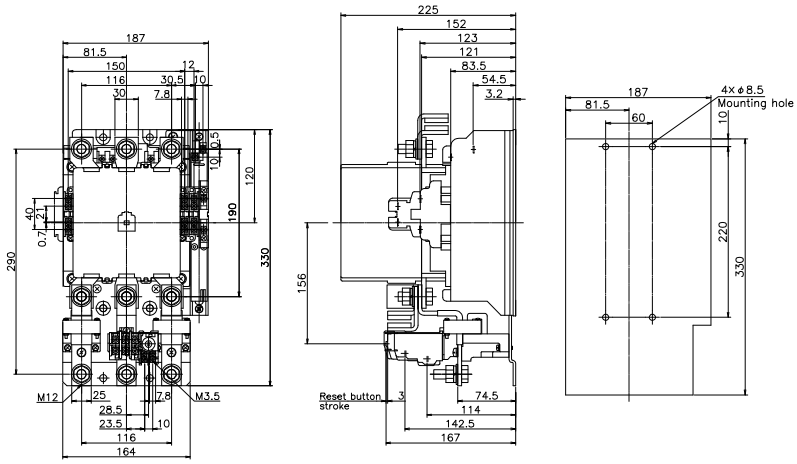

Contact configuration

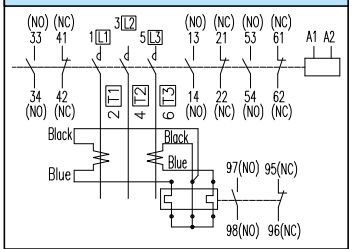

For phase-failure protection

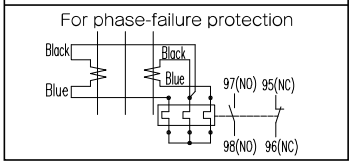

Weight 300JT・400JT=13kg

Non-Reversing Model

600J

PAK-600J PAK-600JT

Ratings

Frame			600J
Rated capacity	AC-3 (kW)	220V	160
		440V	300
		550V	300
	AC-1 (A) (500,000 ops)	220V	600
		440V	600
		550V	—

Conforming wire size and tightening torque

		Screw size	Conforming wire size	Applicable terminal connector	Tightening torque N-m(kgf·cm)
Contactor	Main circuit	M12	2～325mm²	2-12 ～ 325-12	35～45 (350～450)
	Control circuit	M4 M3.5	φ1.6 1.25～2mm²	1.25-4 ～ 2-4	1.0～1.5 (10～15)
Thermal overload relay	Main circuit	M12	2～325mm²	2-12 ～ 325-12	35～45 (350～450)
	Control circuit	M3.5	φ1.6 1.25～2mm²	1.25-3.5 ～ 2-3.5	0.8～1.0 (8～10)

Magnetic contactor (open type) PAK-600J

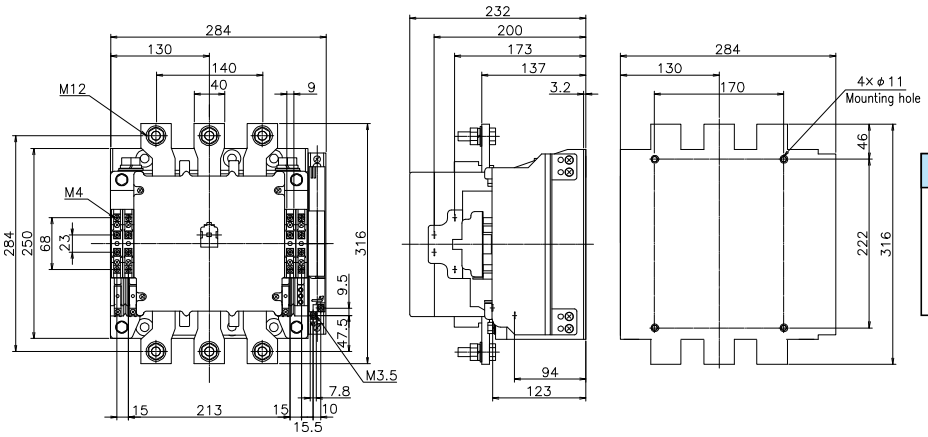

Contact configuration

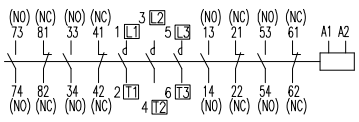

Weight 22kg

Magnetic starter (open type) PAK-600JT · 600JGT

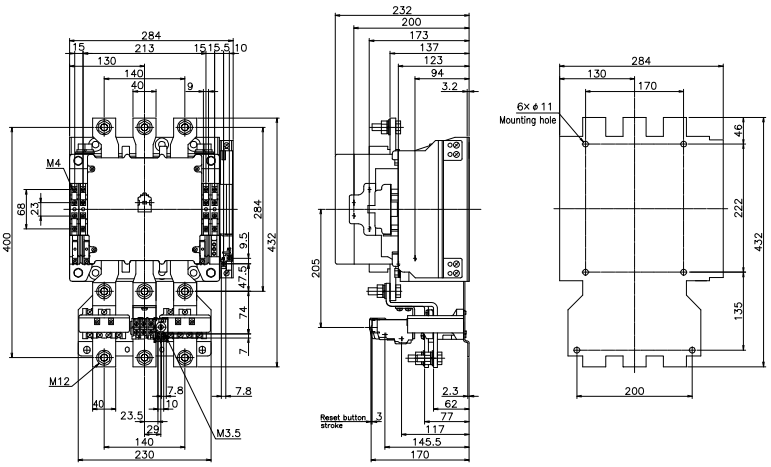

Contact configuration

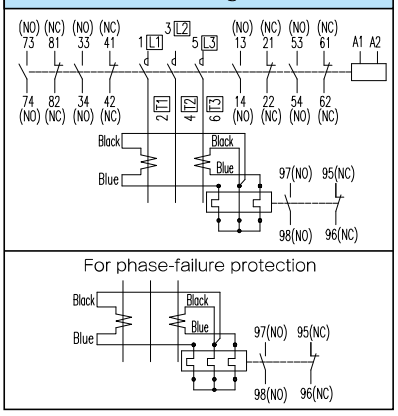

Weight 28kg

800J

PAK-800J

Ratings

Frame			800J
Rated capacity	AC-2 (kW)	220V	200
		440V	400
		550V	–
	AC-1 (A) (100,000 ops)	220V	800
		440V	800
		550V	–

Conforming wire size and tightening torque

		Screw size	Conforming wire size	Applicable terminal connector	Tightening torque N-m(kgf·cm)
Contactor	Main circuit	M16	2～325mm²	2-16 ～ 325-16	35～45 (350～450)
	Control circuit	M4	φ1～2 0.5～5.5mm²	1.25-4 ～ 2-4	1.0～1.5 (10～15)

Magnetic contactor (open type) PAK-800J

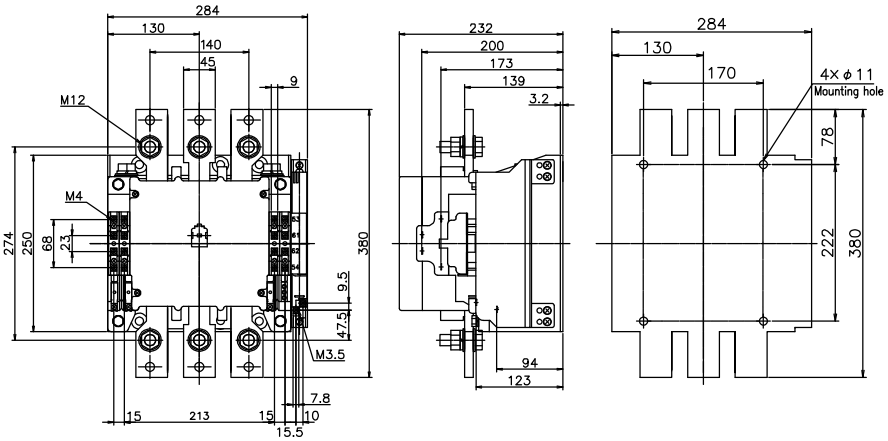

Contact configuration

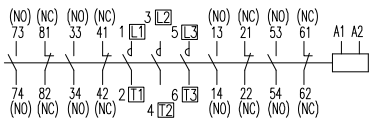

Weight 25kg

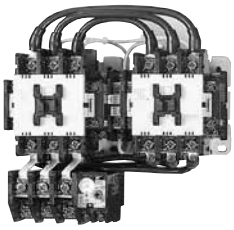
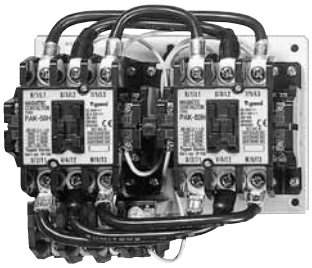
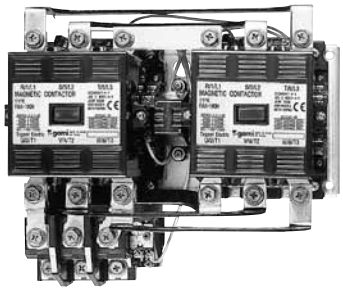

Features

●Reversing standard magnetic contactors & starters

Two standard magnetic contactors are mounted together with a high-reliable mechanical interlock (RSK-11J is an integrated type) . The RSK-12J to 50J interlock units (ML-E type)is provided with both mechanical interlock and electrical interlock contacts (1NCx2).

●Reversing magnetic starters with phase-failure protection thermal overload relays

Reversing magnetic starters with phase-failure protection thermal overload relays are reversing magnetic starters combined with an phase-failure protection thermal overload relay containing a differential amplifying mechanism. In addition to motor start/stop and protection from overload and locking, they also protect motors from phase-failure protection accidents.
The same as standard reversing magnetic starters, this magnetic starter with phase-failure protection thermal overload relay is easy-to-handle and economical.

●Reversing magnetic starters with 3-heaters thermal overload relays

It protects motor from burnout due to overload and phase-failure.

Ratings, performance and specifications

Item	Item Page
●Rated capacity and operational current	9, 10
●Application for standard motors	14
●Characteristics and performance	15
●Auxiliary contact ratings	10
●Operating coil ratings	11
●Conforming wire size and tightening torque	27
●Thermal overload relays	73

Model explanation

●Reversing standard magnetic contactors & starters

RSK — 20 JT C

Type
RSK ···Reversing model

Model	
J	H
11 300	50 270
12 400	65
20	80
21	95
26	100
35	125
50	150
	220

J	H	Specifications
J	H	Magnetic Contactor (without enclosure)
JT	HT	Magnetic Starter (without enclosure)
JM	HM	Magnetic Starter (with enclosure)
JB	HB	Magnetic Contactor (with enclosure)

Career mark
Only magnetic starter. However except for 50J, 95H, 270H, 300J, 400J models.

●Reversing magnetic starters with phase-failure protection thermal overload relays

RSK — 20 JGT C

Type
RSK ···Reversing model

Model	
J	H
11 300	50 270
12 400	65
20	80
21	95
26	100
35	125
50	150
	220

J	H	Specifications
JGT	HGT	Magnetic Starter (without enclosure)
JGM	HGM	Magnetic Starter (with enclosure)

Career mark
Except for 50J, 95H, 270H, 300J, 400J models.

●Reversing magnetic starters with 3-heaters thermal overload relays

RSK — 20 JT — 3 C

Type
RSK ···Reversing model

Model	
J	H
11	50
12	65
20	80
21	95
26	100
35	125
50	150
	220
	270

J	H	Specifications
JT	HT	Magnetic starter (without enclosure)
JM	HM	Magnetic starter (with enclosure)

Career mark
Except for 50J, 95H, 270H models.

11J

RSK-11JTC

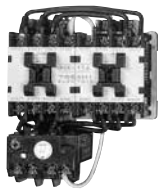

Ratings

Frame			11J
Rated capacity	AC-3 (kW)	240V	3.7
		440V	4.5
		550V	4.5
	AC-1 (A) (500,000 ops)	240V	20
		440V	20
		550V	20

Conforming wire size and tightening torque

		Screw size	Conforming wire size	Applicable terminal connector	Tightening torque N·m(kgf·cm)
Contactor	Main circuit	M3.5	φ1～1.6 0.5～2mm²	1.25－3.5 ～ 2－3.5	0.8～1.2 (8～12)
	Control circuit				
Thermal overload relay	Main circuit	M4	φ1～2 0.5～3.5mm²	1.25－4 ～ 5.5－4	1.2～1.8 (12～18)
	Control circuit	M3.5	φ1～1.6 0.5～2mm²	1.25－3.5 ～ 2－3.5	0.8～1.2 (8～12)

Magnetic contactor (open type) RSK-11J

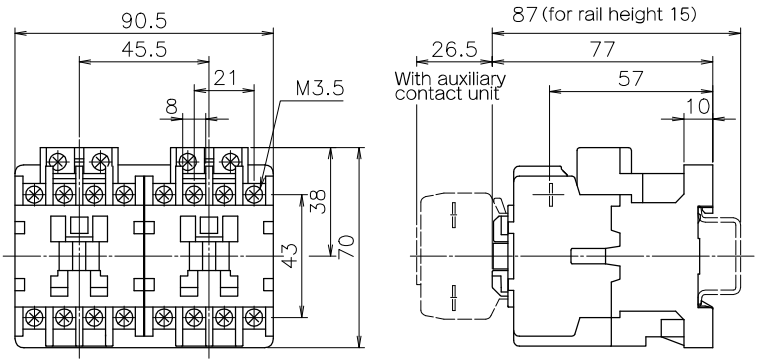

Contact configuration

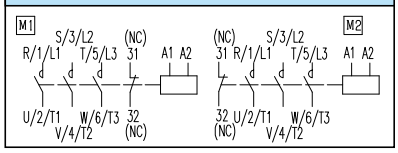

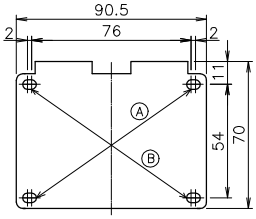

Ⓐ76～80×54 (Recommended mounting hole) (compatible with RSK-6H,11H)

Ⓑ76～80×54

Weight 0.6kg

Magnetic starter (open type) RSK-11JTC · 11JT-3C · 11JGTC

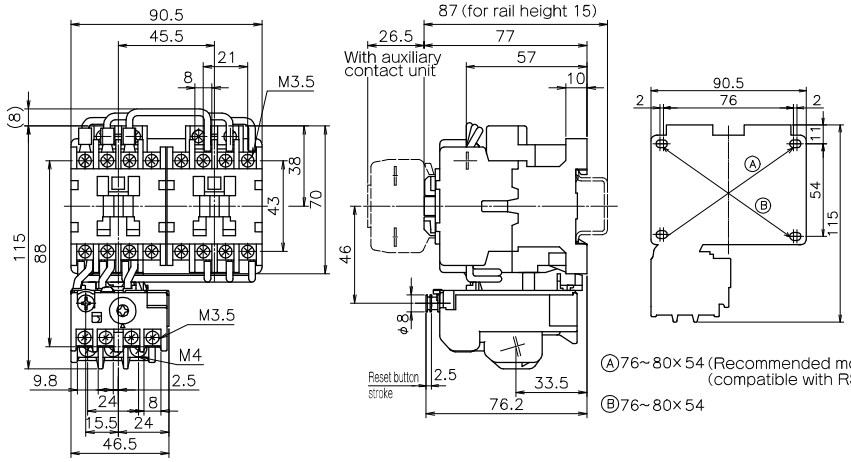

Ⓐ76～80×54 (Recommended mounting point) (compatible with RSK-6H,11H)

Ⓑ76～80×54

Connection diagram

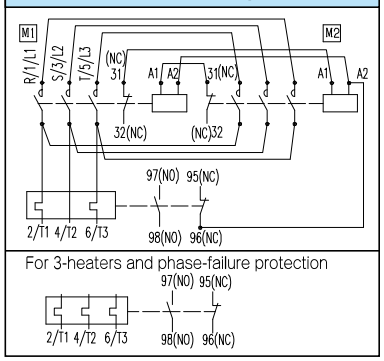

Weight 0.72kg

Magnetic starter · contactor (enclosed type) RSK-11JMC(JB) · 11JM-3C · 11JGMC

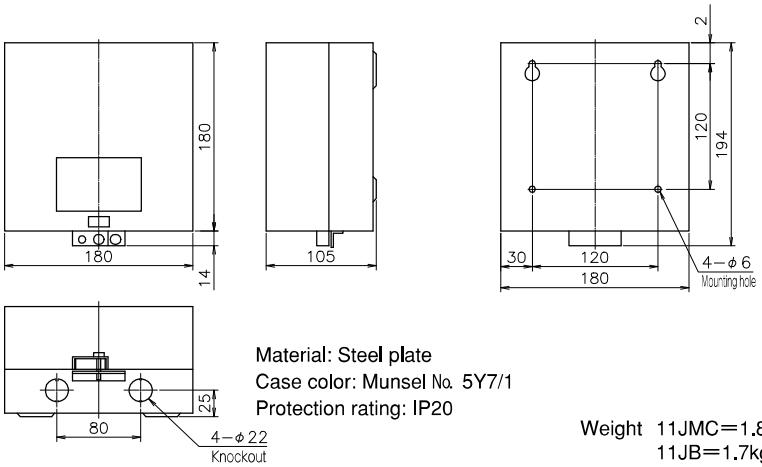

Material: Steel plate
Case color: Munsel No. 5Y7/1
Protection rating: IP20

Weight 11JMC=1.82kg
11JB=1.7kg

※Operation with an outside push button is not possible

Connection diagram

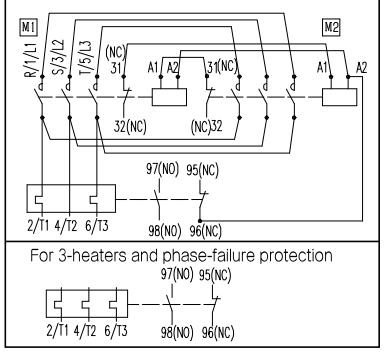

Above diagram is for magnetic starter.

12J

RSK-12JTC

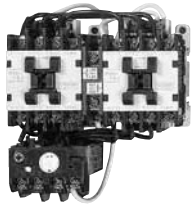

Ratings

Frame			12J
Rated capacity	AC-3 (kW)	240V	4
		440V	5.5
		550V	5.5
	AC-1 (A) (500,000 ops)	240V	26
		440V	26
		550V	26

Conforming wire size and tightening torque

		Screw size	Conforming wire size	Applicable terminal connector	Tightening torque N·m(kgf·cm)
Contactor	Main circuit	M3.5	φ1～1.6 0.5～2mm²	1.25－3.5 ～ 2－3.5	0.8～1.2 (8～12)
	Control circuit				
Thermal overload relay	Main circuit	M4	φ1～2 0.5～3.5mm²	1.25－4 ～ 5.5－4	1.2～1.8 (12～18)
	Control circuit	M3.5	φ1～1.6 0.5～2mm²	1.25－3.5 ～ 2－3.5	0.8～1.2 (8～12)

Magnetic contactor (open type) RSK-12J

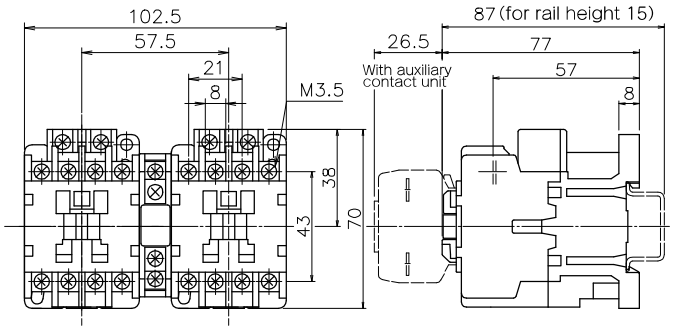

Contact configuration

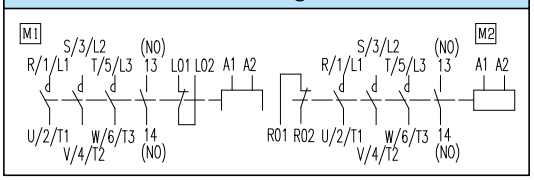

note. LO1,LO2,RO1,RO2 are contacts for exclusive use of electrical interlock.

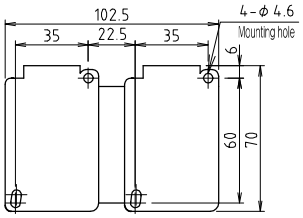

Weight 0.63kg

Magnetic starter (open type) RSK-12JTC · 12JT-3C · 12JGTC

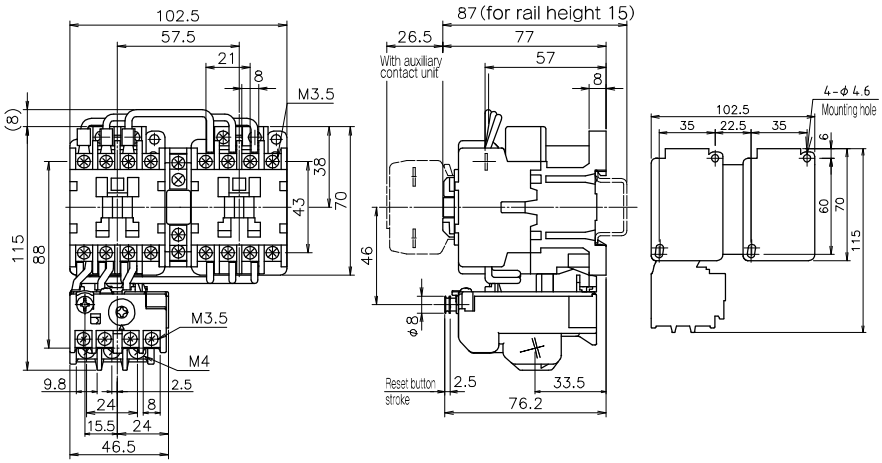

Connection diagram

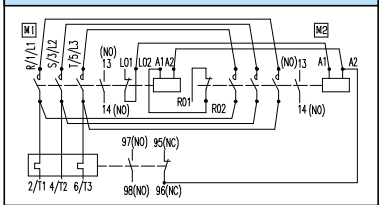

For 3-heaters and phase-failure protection

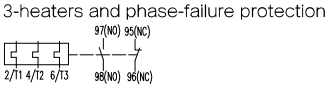

note. LO1,LO2,RO1,RO2 are contacts for exclusive use of electrical interlock.

Weight 0.75kg

Magnetic starter · contactor (enclosed type) RSK-12JMC(JB) · 12JM-3C · 12JGMC

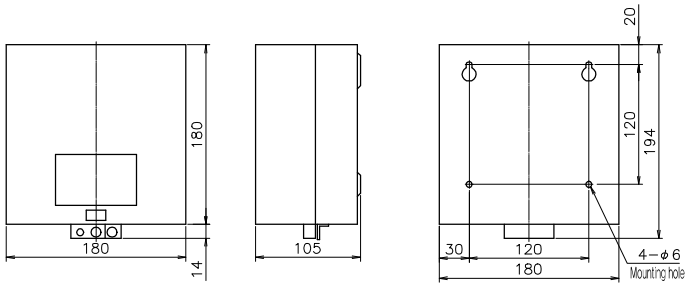

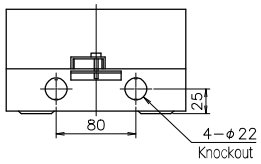

Material: Steel plate
Case color: Munsel No. 5Y7/1
Protection rating: IP20

Weight 12JMC=1.85kg
12JB=1.73kg

Connection diagram

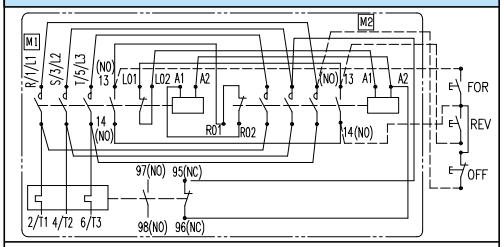

For 3-heaters and phase-failure protection

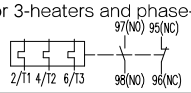

note. LO1,LO2,RO1,RO2 are contacts for exclusive use of electrical interlock.

Dashed lines are not connected.
Above diagram is for magnetic starter.

2

20J

RSK-20JTC

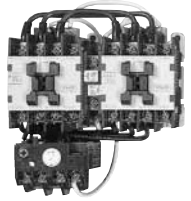

Ratings

Frame			20J
Rated capacity	AC-3 (kW)	240V	7.5
		440V	11
		550V	11
	AC-1 (A) (500,000 ops)	240V	32
		440V	32
		550V	32

Conforming wire size and tightening torque

		Screw size	Conforming wire size	Applicable terminal connector	Tightening torque N·m(kgf·cm)
Contactor	Main cir. Aux cir.	M4	φ1~2 0.5~3.5mm²	1.25-4 3.5~4	1.2~1.8 (12~18)
	Control circuit	M3.5	φ1~1.6 0.5~2mm²	1.25-3.5 2-3.5	0.8~1.2 (8~12)
Thermal overload relay	Main circuit	M4	φ1~2 0.5~3.5mm²	1.25-4 3.5~4	1.2~1.8 (12~18)
	Control circuit	M3.5	φ1~1.6 0.5~2mm²	1.25-3.5 2-3.5	0.8~1.2 (8~12)

Magnetic contactor (open type) RSK-20J

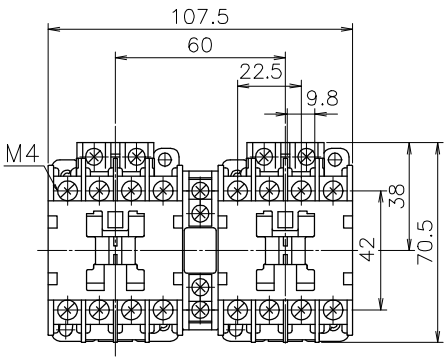

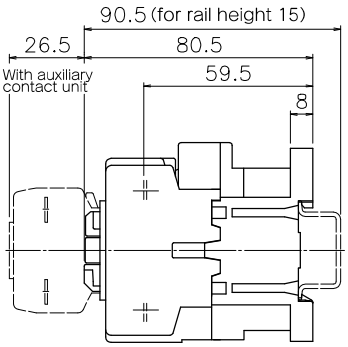

Contact configuration

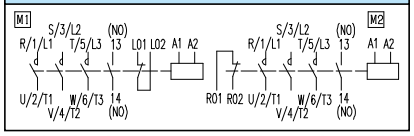

note. LO1,LO2,RO1,RO2 are contacts for exclusive use of electrical interlock.

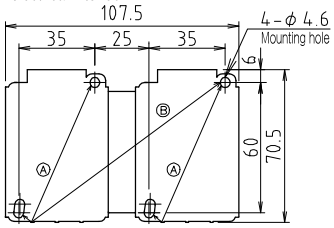

Ⓐ (35×60)×2 (Recommended mounting point)
Ⓑ 95×60 (compatible with RSK-12H,18H)

Weight 0.68kg

Magnetic starter (open type) RSK-20JTC · 20JT-3C · 20JGTC

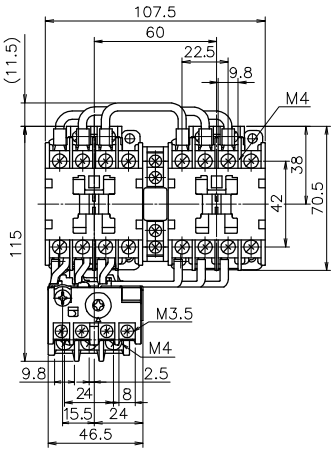

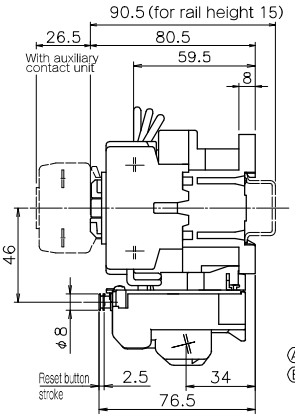

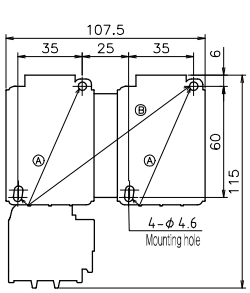

Ⓐ (35×60)×2 (Recommended mounting point)
Ⓑ 95×60 (compatible with RSK-12H,18H)

Connection diagram

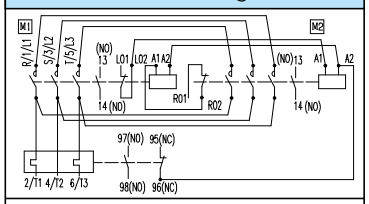

For 3-heaters and phase-failure protection

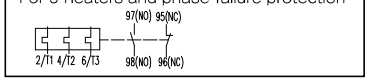

note. LO1,LO2,RO1,RO2 are contacts for exclusive use of electrical interlock.

Weight 0.79kg

Magnetic starter · contactor (enclosed type) RSK-20JMC(JB) · 20JM-3C · 20JGMC

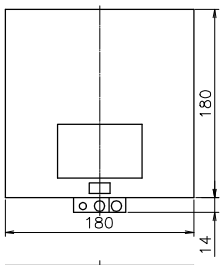

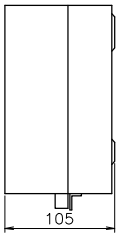

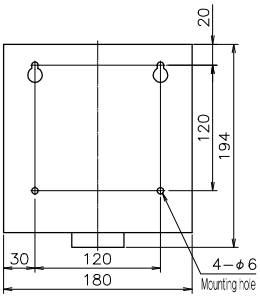

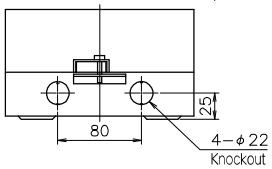

Material: Steel plate
Case color: Munsel No. 5Y7/1
Protection rating: IP20

Weight 20JMC=1.89kg
20JB=1.78kg

Connection diagram

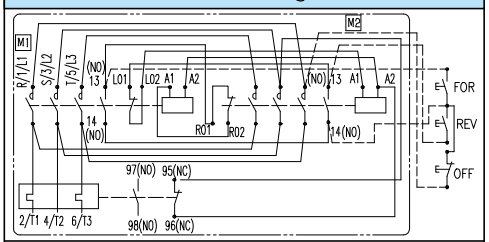

For 3-heaters and phase-failure protection

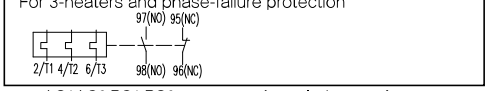

note. LO1,LO2,RO1,RO2 are contacts for exclusive use of electrical interlock.

Dashed lines are not connected.
Above diagram is for magnetic starter.

21J

RSK-21JTC

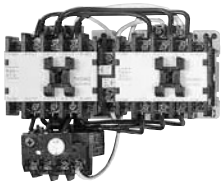

Ratings

Frame			21J
Rated capacity	AC-3 (kW)	240V	7.5
		440V	11
		550V	11
	AC-1 (A) (500,000ops)	240V	32
		440V	32
		550V	32

Conforming wire size and tightening torque

		Screw size	Conforming wire size	Applicable terminal connector	Tightening torque N·m(kgf·cm)
Contactor	Main circuit	M4	φ1～2 0.5～3.5mm²	1.25-4 ～ 3.5-4	1.2～1.8 (12～18)
	Control circuit	M3.5	φ1～1.6 0.5～2mm²	1.25-3.5 ～ 2-3.5	0.8～1.2 (8～12)
Thermal overload relay	Main circuit	M4	φ1～2 0.5～3.5mm²	1.25-4 ～ 3.5-4	1.2～1.8 (12～18)
	Control circuit	M3.5	φ1～1.6 0.5～2mm²	1.25-3.5 ～ 2-3.5	0.8～1.2 (8～12)

Magnetic contactor (open type) RSK-21J

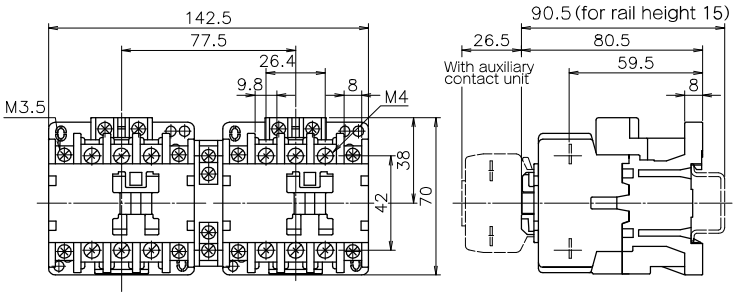

Contact configuration

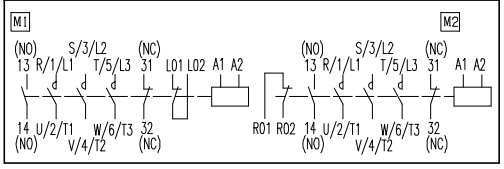

note. LO1,LO2,RO1,RO2 are contacts for exclusive use of electrical interlock.

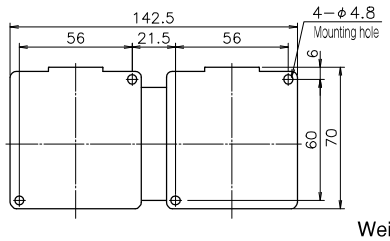

Weight 0.75kg

Magnetic starter (open type) RSK-21JTC · 21JT-3C · 21JGTC

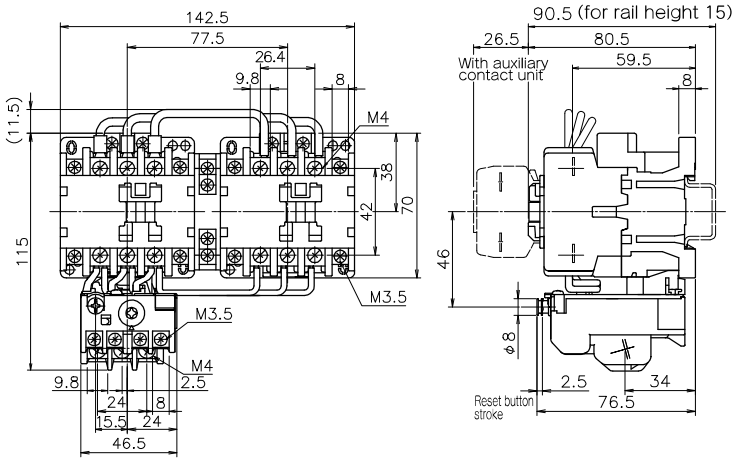

Connection diagram

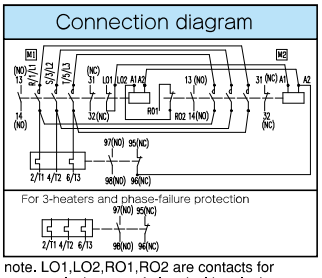

note. LO1,LO2,RO1,RO2 are contacts for exclusive use of electrical interlock.

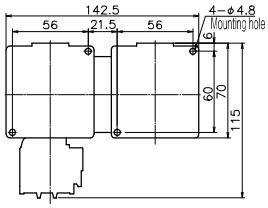

Weight 0.97kg

Magnetic starter · contactor (enclosed type) RSK-21JMC(JB) · 21JM-3C · 21JGMC

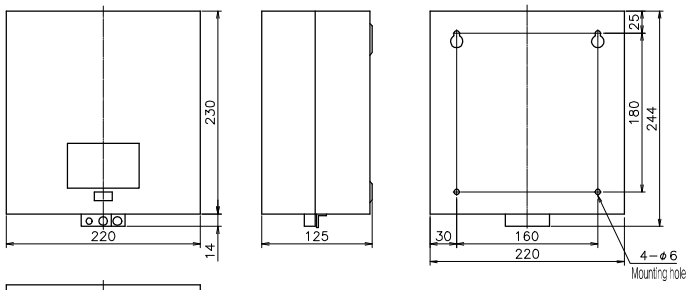

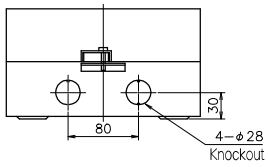

Material: Steel plate
Case color: Munsel No. 5Y7/1
Protection rating: IP20

Weight 21JMC=2.72kg
21JB=2.5kg

Connection diagram

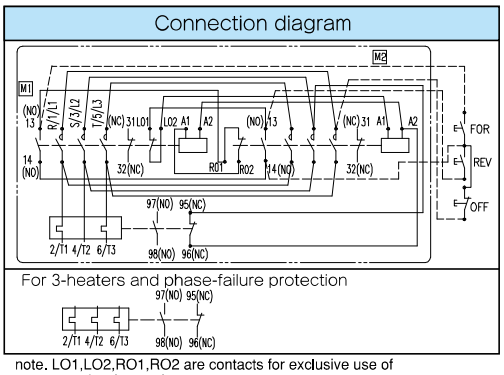

note. LO1,LO2,RO1,RO2 are contacts for exclusive use of electrical interlock.

Dashed lines are not connected.
Above diagram is for magnetic starter.

2

26J・35J・50J

RSK-26JTC·35JTC·50JT

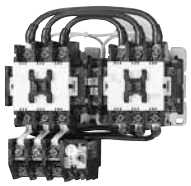

Ratings

Frame			26J	35J	50J
Rated capacity	AC-3 (kW)	240V	10	15	18.5
		440V	20	26	30
		550V	20	26	30
	AC-1 (A) (500,000 ops)	240V	50	60	65
		440V	50	60	65
		550V	50	60	65

Conforming wire size and tightening torque

		Screw size	Conforming wire size	Applicable terminal connector	Tightening torque N·m(kgf·cm)
Contactor	Main circuit	M5	φ1.6~3.2 1.25~14mm²	1.25-5 1.4-5	2.4~3.5 (24~36)
	Control circuit	M3.5	φ1~1.6 0.5~2mm²	1.25-3.5 2-3.5	0.8~1.2 (8~12)
Thermal overload relay	Main circuit	M5	φ1.6~3.2 1.25~14mm²	1.25-5 1.4-5	2.4~3.5 (24~36)
	Control circuit	M3.5	φ1~1.6 0.5~2mm²	1.25-3.5 2-3.5	0.8~1.2 (8~12)

Magnetic contactor (open type) RSK-26J・35J・50J

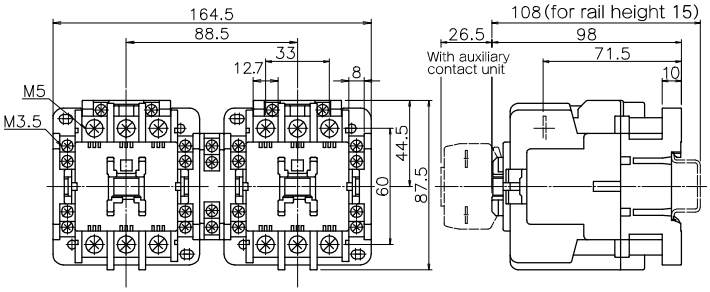

Contact configuration

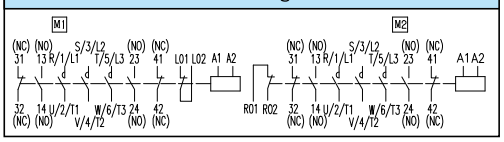

note. LO1,LO2,RO1,RO2 are contacts for exclusive use of electrical interlock.

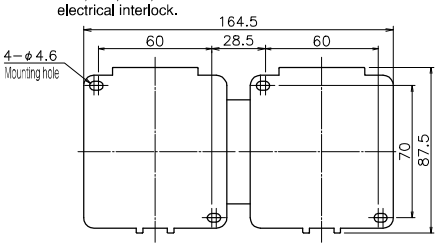

Weight 26J·35J·50J=1.4kg

Magnetic starter (open type) RSK-26JTC・35JTC・50JT・26JT-3C・35JT-3C・50JT-3・26JGTC・35JGTC・50JGT

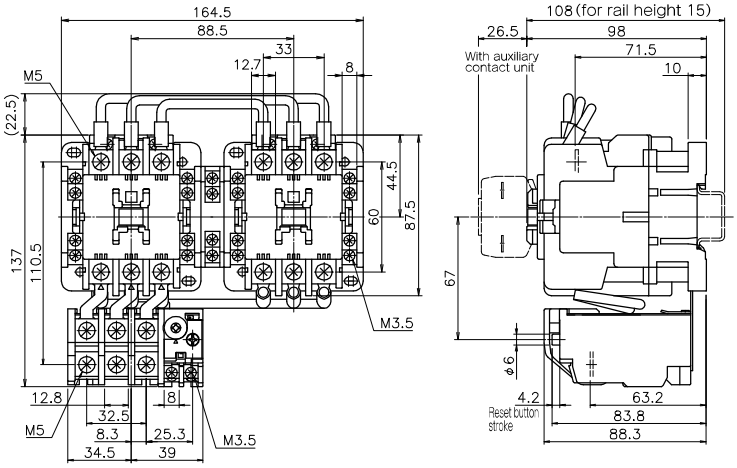

Connection diagram

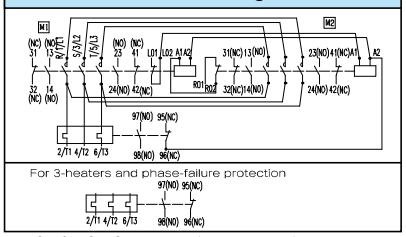

note. LO1,LO2,RO1,RO2 are contacts for exclusive use of electrical interlock.

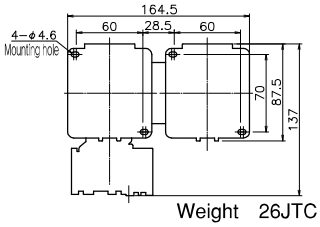

Weight 26JTC·35JTC·50JT=1.75kg

Magnetic starter・contactor (enclosed type) RSK-26JMC(JB)・35JMC(JB)・50JM(JB)・26JM-3C・35JM-3C・50JM-3・26JGMC・35JGMC・50JGM

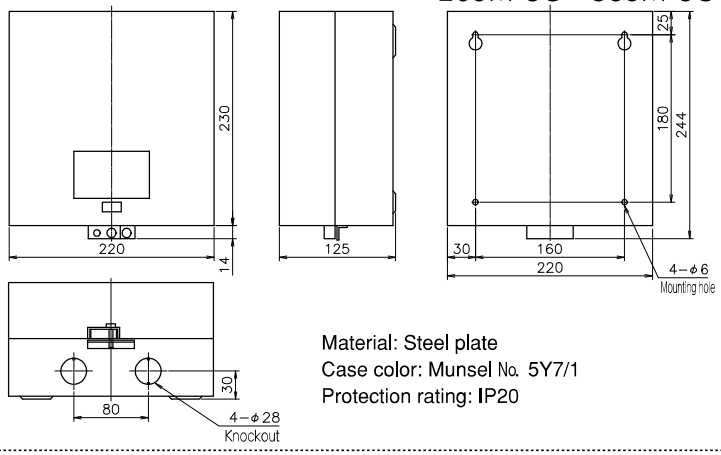

Material: Steel plate
Case color: Munsel No. 5Y7/1
Protection rating: IP20

Connection diagram

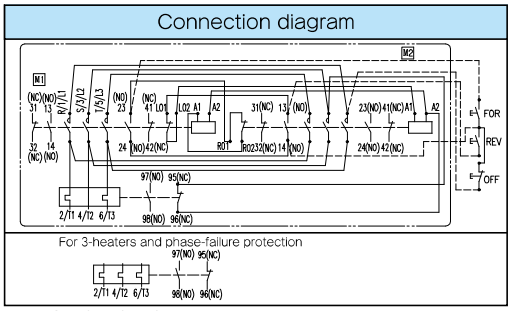

note. LO1,LO2,RO1,RO2 are contacts for exclusive use of electrical interlock.
Dashed lines are not connected.
Above diagram is for magnetic starter.

Weight 26JMC·35JMC·50JM=3.5kg
26JB·35JB·50JB=3.15kg

50H・65H

RSK-50HTC·65HTC

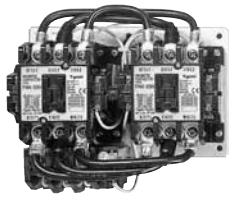

Ratings

Frame			50H	65H
Rated capacity	AC-3 (kW)	240V	18.5	22
		440V	30	37
		550V	30	37
	AC-1 (A) (500,000 ops)	240V	75	90
		440V	75	90
		550V	75	90

Conforming wire size and tightening torque

		Screw size	Conforming wire size	Applicable terminal connector	Tightening torque N·m(kgf·cm)
Contactor	Main circuit	M6	2～38mm² Using crimped terminals	2－6 ～ 38－6S	3.9～5.9 (40～60)
	Control circuit	M3.5	φ1～1.6 0.5～2mm²	1.25－3.5 ～ 2－3.5	0.8～1.2 (8～12)
Thermal overload relay	Main circuit	M6	2～38mm² Using crimped terminals	2－6 ～ 38－6S	3.9～5.9 (40～60)
	Control circuit	M3.5	φ1～1.6 0.5～2mm²	1.25－3.5 ～ 2－3.5	0.8～1.2 (8～12)

Magnetic contactor (open type) RSK-50H · 65H

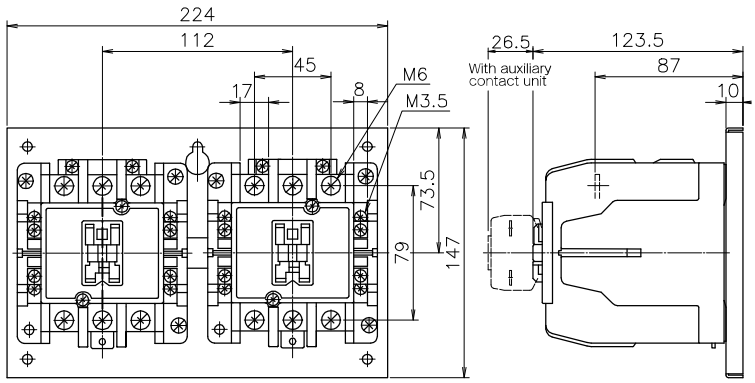

Contact configuration

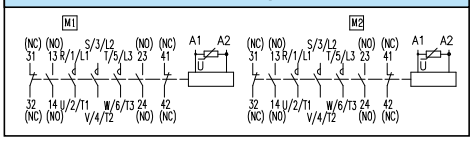

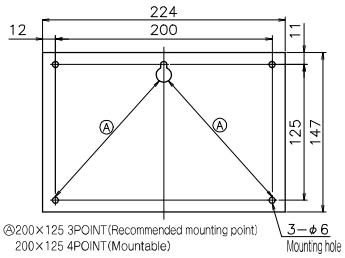

Weight 50H=3.22kg 65H=3.42kg

Magnetic starter (open type) RSK-50HTC · 65HTC · 50HT-3C · 65HT-3C · 50HGTC · 65HGTC

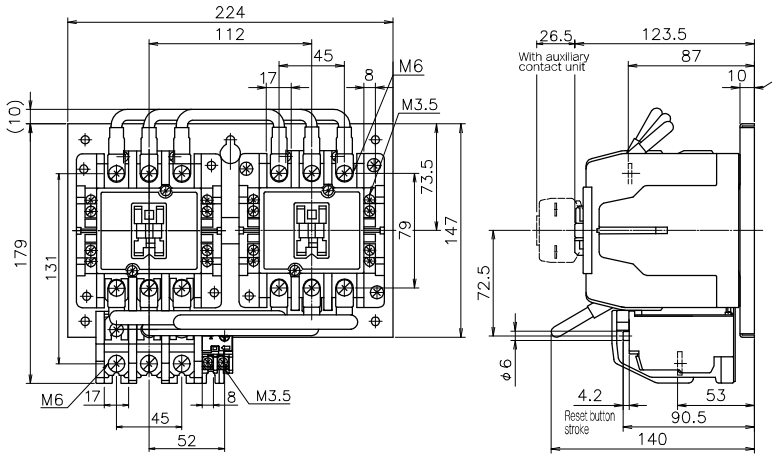

Connection diagram

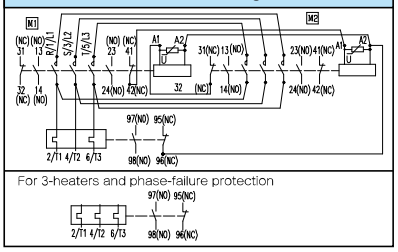

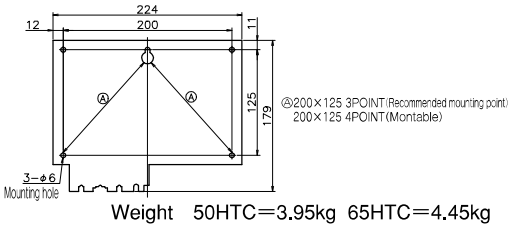

Weight 50HTC=3.95kg 65HTC=4.45kg

Magnetic starter · contactor (enclosed type) RSK-50HMC(HB) · 65HMC(HB) · 50HM-3C · 65HM-3C · 50HGMC · 65HGMC

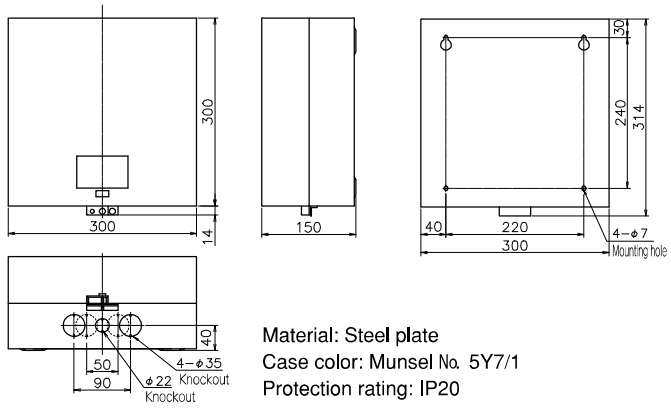

Material: Steel plate
Case color: Munsel No. 5Y7/1
Protection rating: IP20

Connection diagram

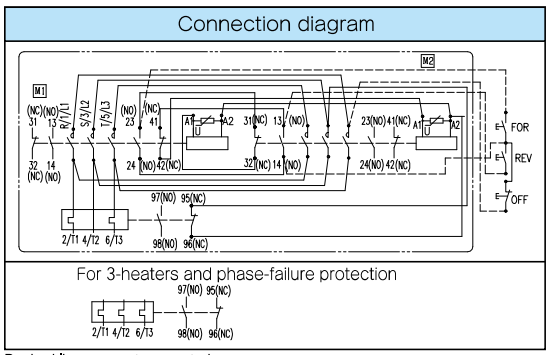

Dashed lines are not connected.
Above diagram is for magnetic starter.

Weight 50HMC=6.91kg·65HMC=7.41kg
50HB=6.18kg·65HB=6.38kg

2

80H・95H

RSK-80HTC・95HT

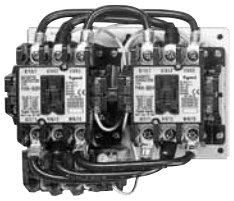

Ratings

Frame			80H	95H
Rated capacity	AC-3 (kW)	240V	25	27
		440V	45	55
		550V	45	55
	AC-1 (A) (500,000 ops)	240V	110	110
		440V	110	110
		550V	110	110

Conforming wire size and tightening torque

		Screw size	Conforming wire size	Applicable terminal connector	Tightening torque N·m(kgf·cm)
Contactor	Main circuit	M6	2～38mm² Using crimped terminals	2－6 ～ 38－6S	3.9～5.9 (40～60)
	Control circuit	M3.5	φ1～1.6 0.5～2mm²	1.25－3.5 ～ 2－3.5	0.8～1.2 (8～12)
Thermal overload relay	Main circuit	M6	2～38mm² Using crimped terminals	2－6 ～ 38－6S	3.9～5.9 (40～60)
	Control circuit	M3.5	φ1～1.6 0.5～2mm²	1.25－3.5 ～ 2－3.5	0.8～1.2 (8～12)

Magnetic contactor (open type) RSK-80H・95H

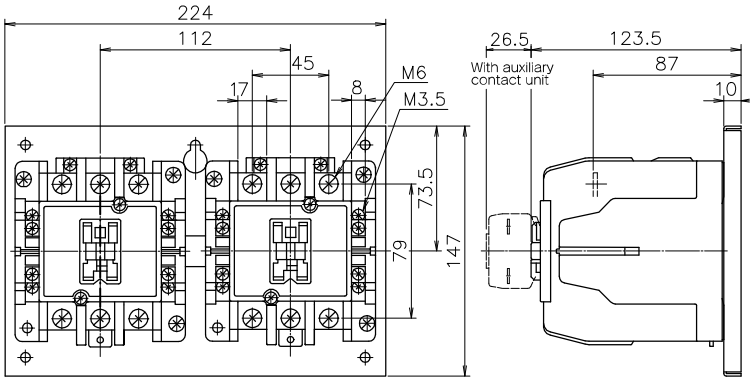

Contact configuration

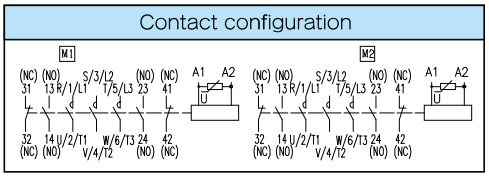

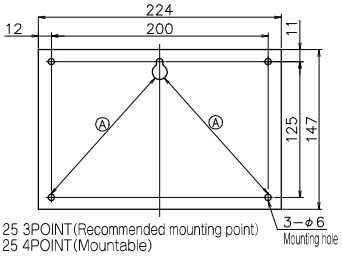

Weight 80H・95H＝3.42kg

Magnetic starter (open type) RSK-80HTC・95HT・80HT-3C・95HT-3・80HGTC・95HGT

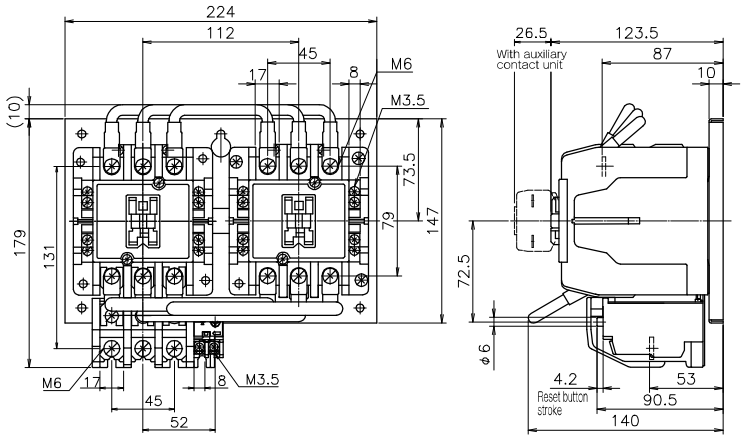

Connection diagram

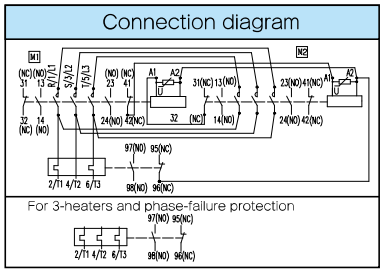

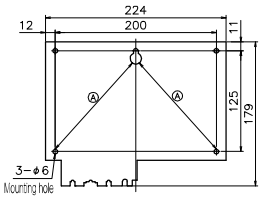

Ⓐ200×125 3POINT(Recommended mounting point)
200×125 4POINT(Mountable)

Weight 80HTC・95HT＝4.45kg

Magnetic starter・contactor (enclosed type) RSK-80HMC(HB)・95HM(HB)・80HM-3C・95HM-3・80HGMC・95HGM

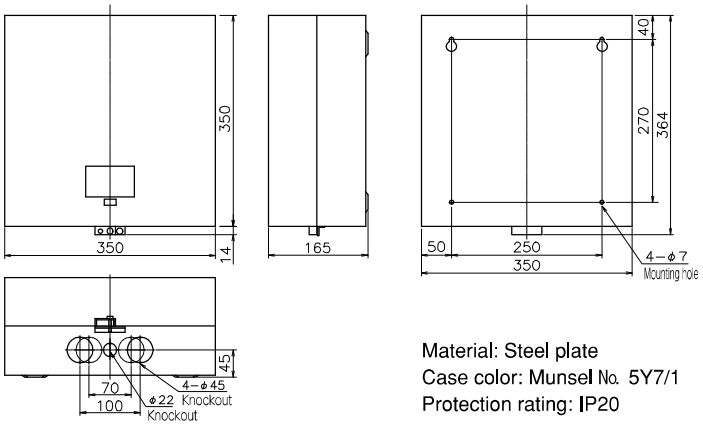

Material: Steel plate
Case color: Munsel No. 5Y7/1
Protection rating: IP20

Connection diagram

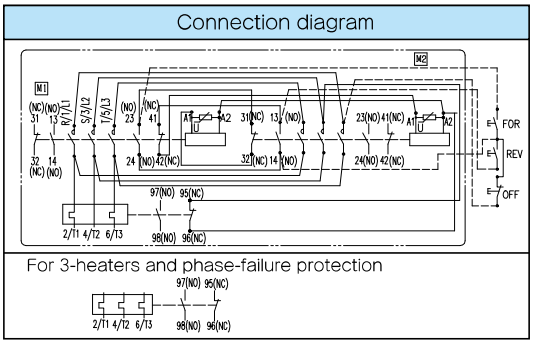

Dashed lines are not connected.
Above diagram is for magnetic starter.

Weight 80HMC・95HM＝8.4kg
80HB・95HB＝7.37kg

100H

RSK-100HTC

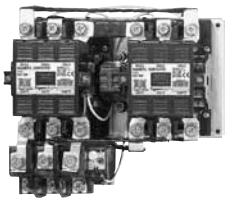

Ratings

Frame			100H
Rated capacity	AC-3 (kW)	240V	37
		440V	55
		550V	55
	AC-1 (A) (500,000 ops)	240V	150
		440V	150
		550V	150

Conforming wire size and tightening torque

		Screw size	Conforming wire size	Applicable terminal connector	Tightening torque N·m(kgf·cm)
Contactor	Main circuit	M8	2～80mm² Using crimped terminals	2～8 CB80－8	9.0～13.5 (92～138)
	Control circuit	M3.5	φ1～1.6 0.5～2mm²	1.25～3.5 2～3.5	0.8～1.2 (8～12)
Thermal overload relay	Main circuit	M8	2～80mm² Using crimped terminals	2～8 CB80－8	9.0～13.5 (92～138)
	Control circuit	M3.5	φ1～1.6 0.5～2mm²	1.25～3.5 2～3.5	0.8～1.2 (8～12)

Magnetic contactor (open type) RSK-100H

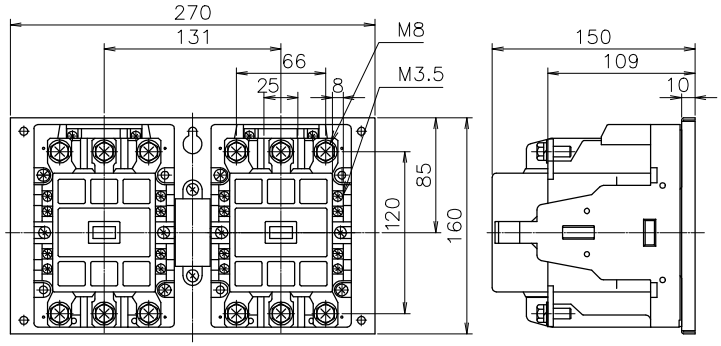

Contact configuration

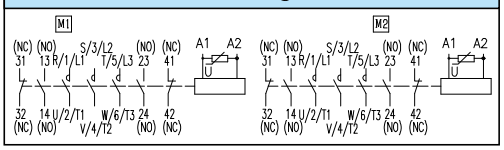

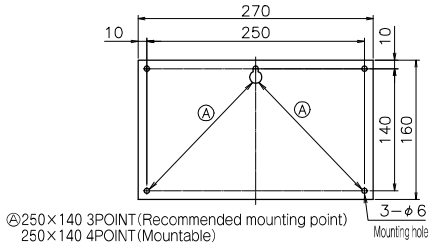

Ⓐ250×140 3POINT(Recommended mounting point)
250×140 4POINT(Mountable)

Weight 6.8kg

Magnetic starter (open type) RSK-100HTC · 100HT-3C · 100HGTC

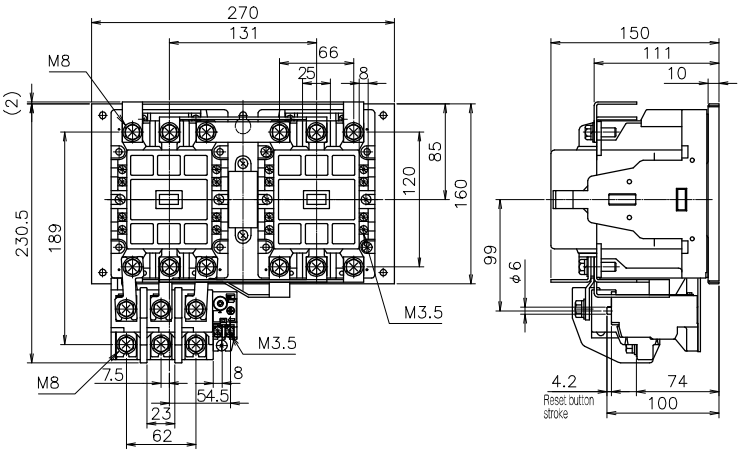

Connection diagram

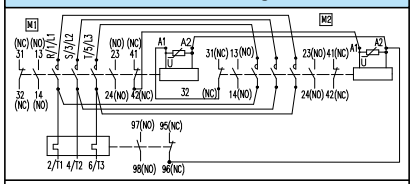

For 3-heaters and phase-failure protection

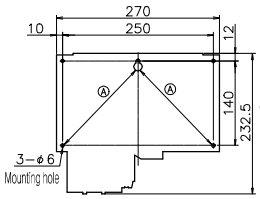

Ⓐ250×140 3POINT(Recommended mounting point)
250×140 4POINT(Mountable)

Weight 8.1kg

Magnetic starter · contactor (enclosed type) RSK-100HMC(HB) · 100HM-3C · 100HGMC

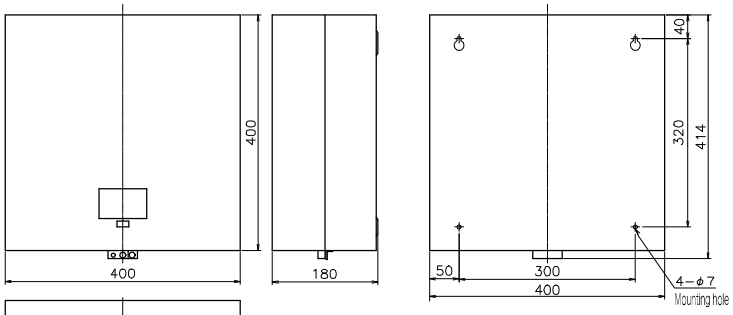

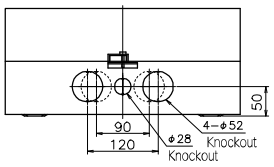

Material: Steel plate
Case color: Munsel No. 5Y7/1
Protection rating: IP20

Connection diagram

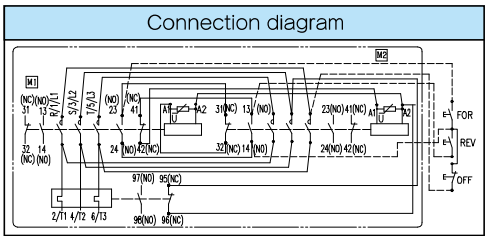

For 3-heaters and phase-failure protection

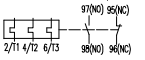

Dashed lines are not connected.
Above diagram is for magnetic starter.

Weight 100HMC=14.3kg
100HB=13.0kg

125H

RSK-125HTC

Ratings

Frame			125H
Rated capacity	AC-3 (kW)	240V	45
		440V	60
		550V	70
	AC-1 (A) (500,000 ops)	240V	170
		440V	170
		550V	170

Conforming wire size and tightening torque

		Screw size	Conforming wire size	Applicable terminal connector	Tightening torque N·m(kgf·cm)
Contactor	Main circuit	M8	2～80mm² Using crimped terminals	2-8 ～ CB80-8	9.0～13.5 (92～138)
	Control circuit	M3.5	φ1～1.6 0.5～2mm²	1.25-3.5 ～ 2-3.5	0.8～1.2 (8～12)
Thermal overload relay	Main circuit	M8	2～80mm² Using crimped terminalss	2-8 ～ CB80-8	9.0～13.5 (92～138)
	Control circuit	M3.5	φ1～1.6 0.5～2mm²	1.25-3.5 ～ 2-3.5	0.8～1.2 (8～12)

Magnetic contactor (open type) RSK-125H

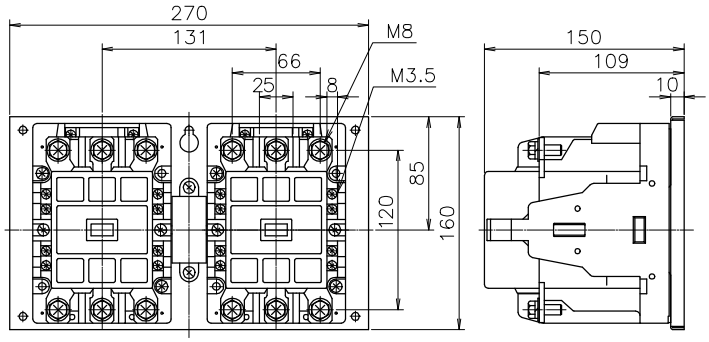

Contact configuration

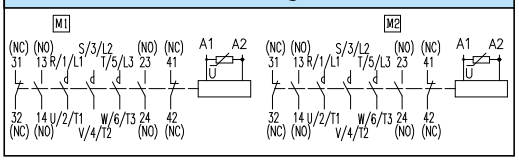

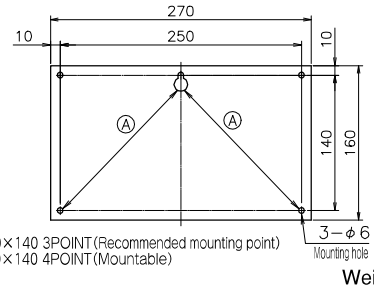

Ⓐ250×140 3POINT (Recommended mounting point)
250×140 4POINT (Mountable)

Weight 6.8kg

Magnetic starter (open type) RSK-125HTC · 125HT-3C · 125HGTC

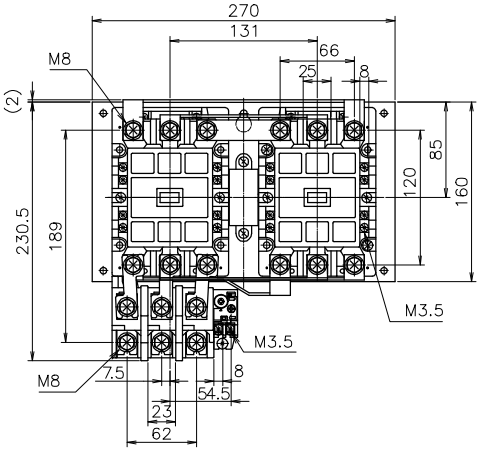

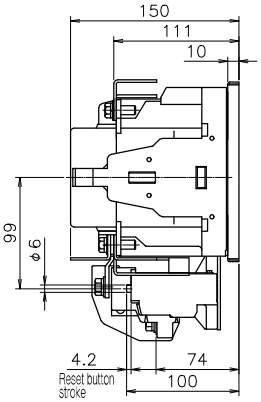

Connection diagram

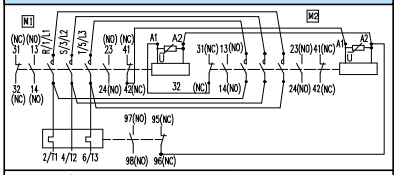

For 3-heaters and phase-failure protection

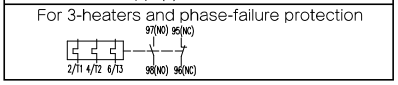

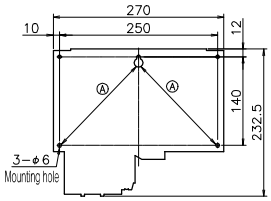

Ⓐ250×140 3POINT (Recommended mounting point)
250×140 4POINT (Mountable)

Weight 8.1kg

Magnetic starter · contactor (enclosed type) RSK-125HMC(HB) · 125HM-3C · 125HGMC

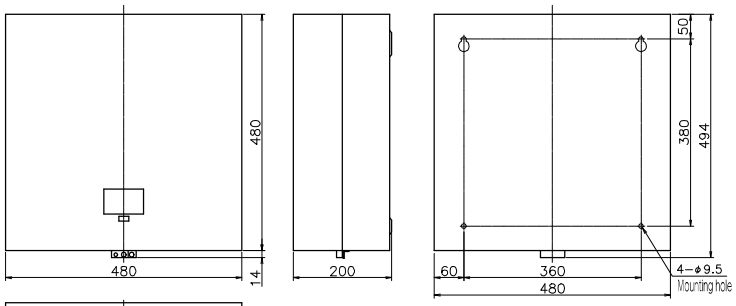

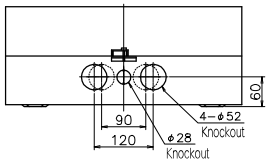

Material: Steel plate
Case color: Munsel No. 5Y7/1
Protection rating: IP20

Connection diagram

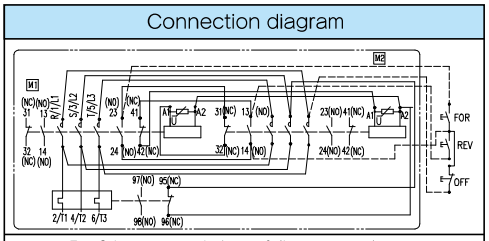

For 3-heaters and phase-failure protection

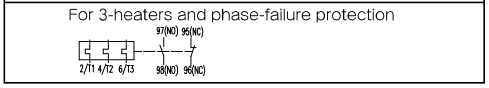

Dashed lines are not connected.
Above diagram is for magnetic starter.

Weight 125HMC=18.0kg
125HB=16.7kg

150H

RSK-150HTC

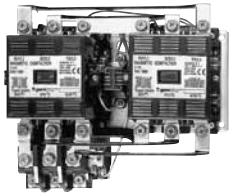

Ratings

Frame			150H
Rated capacity	AC-3 (kW)	240V	60
		440V	75
		550V	75
	AC-1(A) (500,000 ops)	240V	220
		440V	220
		550V	220

Conforming wire size and tightening torque

		Screw size	Conforming wire size	Applicable terminal connector	Tightening torque N·m(kgf·cm)
Contactor	Main circuit	M8	2～100mm² Using crimped erminals	2-8 ～ CB100-8	9.0～13.5 (92～138)
	Control circuit	M3.5	φ1～1.6 0.5～2mm²	1.25-3.5 ～ 2-3.5	0.8～1.2 (8～12)
Thermal overload relay	Main circuit	M8	2～100mm² Using crimped terminals	2-8 ～ CB100-8	9.0～13.5 (92～138)
	Control circuit	M3.5	φ1～1.6 0.5～2mm²	1.25-3.5 ～ 2-3.5	0.8～1.2 (8～12)

Magnetic contactor (open type) RSK-150H

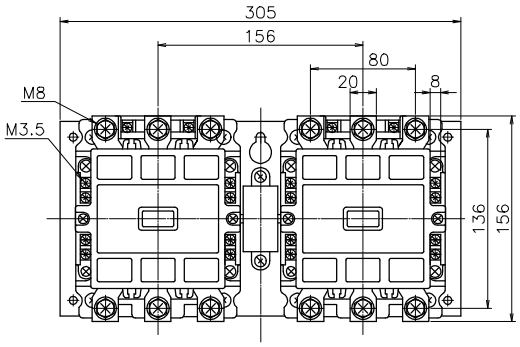

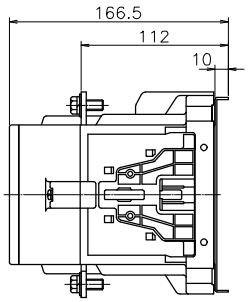

Contact configuration

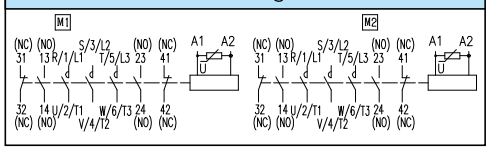

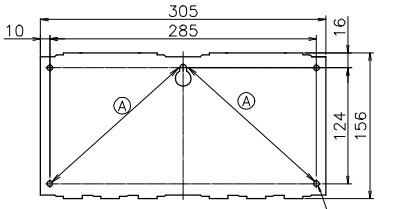

Ⓐ285×124 3POINT(Recommended mounting point)
285×124 4POINT(Mountable)

3−φ7 Mounting hole

Weight 8.68kg

Magnetic starter (open type) RSK-150HTC · 150HT-3C · 150HGTC

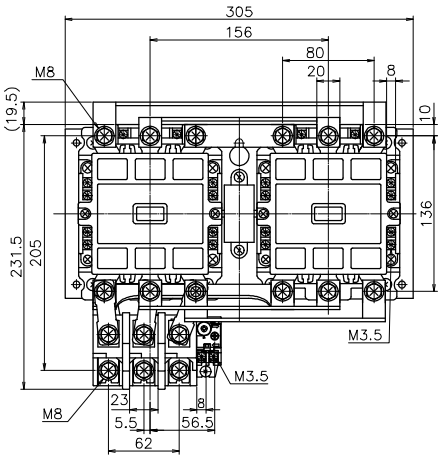

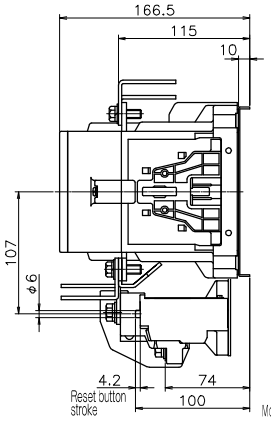

Connection diagram

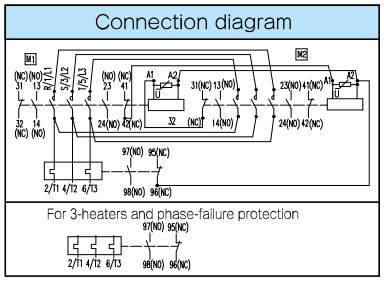

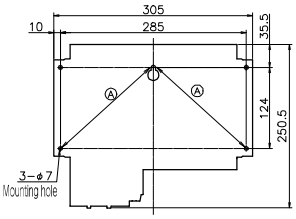

Ⓐ285×124 3POINT(Recommended mounting point)
285×124 4POINT(Mountable)

Weight 9.75kg

Magnetic starter · contactor (enclosed type) RSK-150HMC(HB) · 150HM-3C · 150HGMC

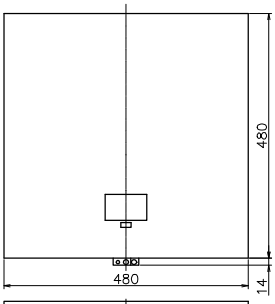

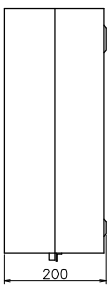

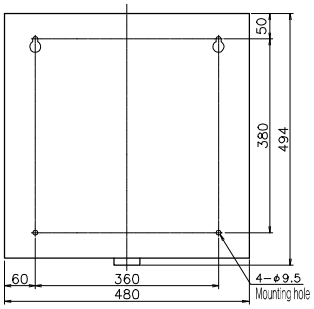

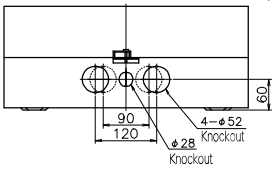

Material: Steel plate
Case color: Munsell No. 5Y7/1
Protection rating: IP20

Connection diagram

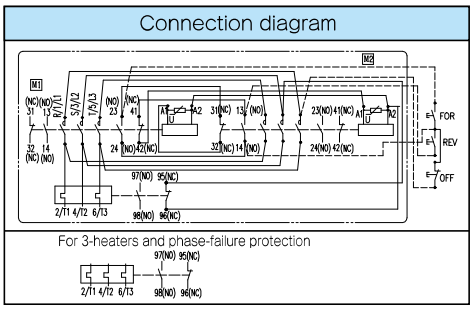

Dashed lines are not connected.
Above diagram is for magnetic starter.

Weight 150HMC=19.8kg
150HB=18.7kg

2

220H・270H

RSK-220HTC・270HT

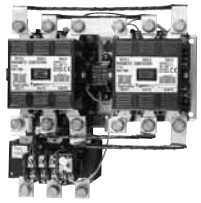

Ratings

Frame			220H	270H
Rated capacity	AC-3 (kW)	240V	80	90
		440V	90	132
		550V	90	132
	AC-1 (A) (500,000 ops)	240V	275	310
		440V	275	310
		550V	275	310

Conforming wire size and tightening torque

		Screw size	Conforming wire size	Applicable terminal connector	Tightening torque N·m(kgf·cm)
Contactor	Main circuit	M10	2~150mm² Using crimped terminals	2-10 ~ CB150-10	18.1~27 (185~275)
	Control circuit	M3.5	φ1~1.6 0.5~2mm²	1.25-3.5 ~ 2-3.5	0.8~1.2 (8~12)
Thermal overload relay	Main circuit	M10	2~150mm² Using crimped terminals	2-10 ~ CB150-10	18.1~27 (185~275)
	Control circuit	M3.5	φ1~1.6 0.5~2mm²	1.25-3.5 ~ 2-3.5	0.8~1.2 (8~12)

Magnetic contactor (open type) RSK-220H・270H

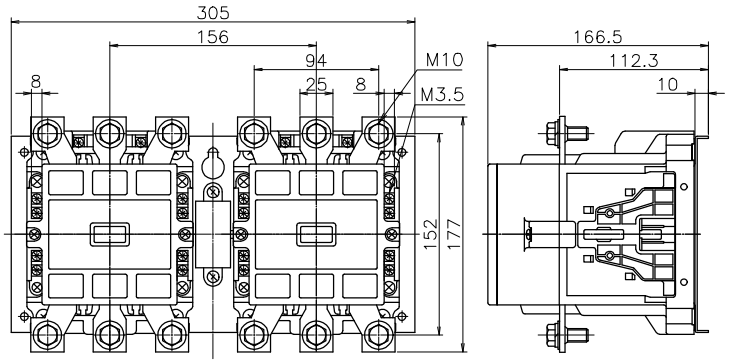

Contact configuration

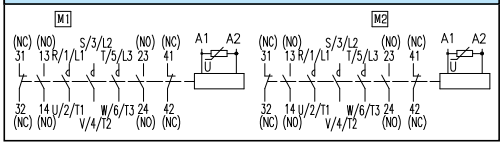

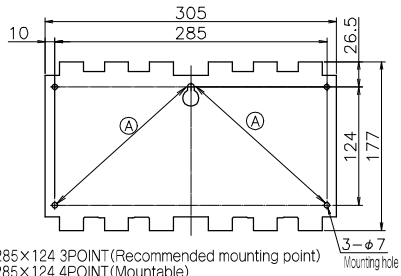

Ⓐ285×124 3POINT(Recommended mounting point)
285×124 4POINT(Mountable)

Weight 220H・270H=9.9kg

Magnetic starter (open type) RSK-220HTC・270HT・220HT-3C・270HT-3・220HGTC・270HGT

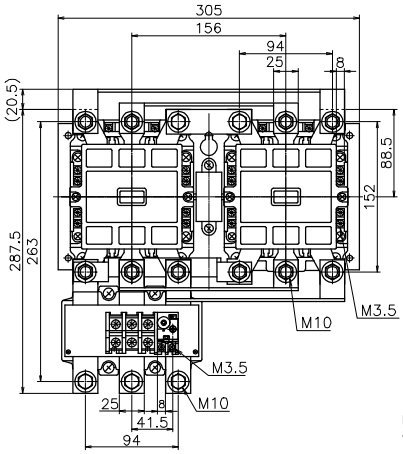

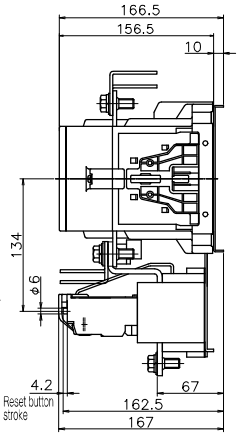

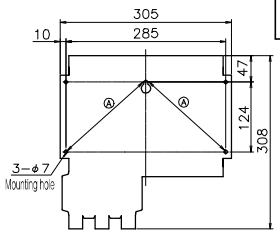

Connection diagram

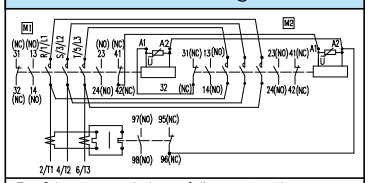

For 3-heaters and phase-failure protection

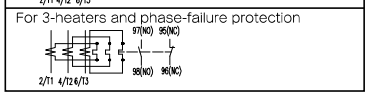

Ⓐ285×124 3POINT(Recommended mounting point)
285×124 4POINT(Mountable)

Weight 220HTC・270HT=12.4kg

Magnetic starter・contactor (enclosed type) RSK-220HMC(HB)・270HM(HB)・220HM-3C・270HM-3C・220HGMC・270HGM

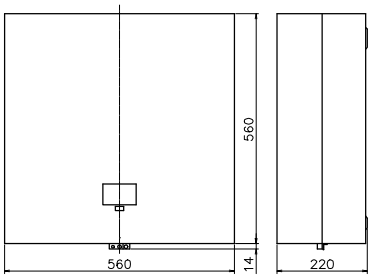

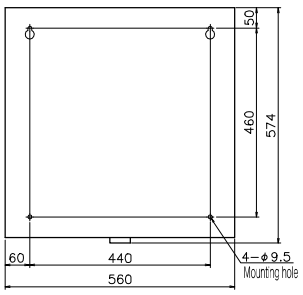

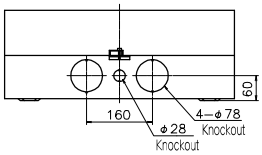

Material: Steel plate
Case color: Munsell No. 5Y7/1
Protection rating: IP20

Weight 220HMC・270HM=22.4kg
220HB・270HB=19.9kg

Connection diagram

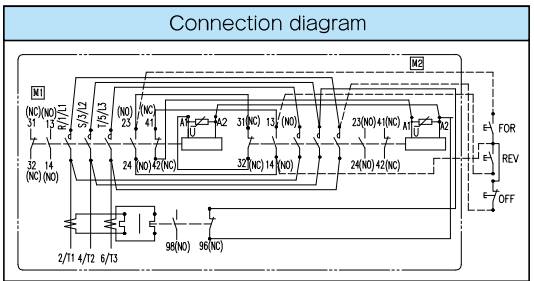

For 3-heaters and phase-failure protection

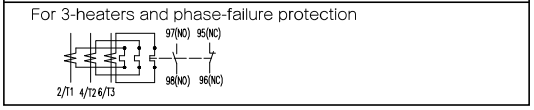

Dashed lines are not connected.
Above diagram is for magnetic starter.

300J・400J

RSK-300JT・400JT

No image

Ratings

Frame			300J	400J
Rated capacity	AC-3 (kW)	220V	90	115
		440V	150	200
		550V	160	200
	AC-1(A) (500,000 ops)	220V	350	420
		440V	350	420
		550V	—	—

Conforming wire size and tightening torque

		Screw size	Conforming wire size	Applicable terminal connector	Tightening torque N·m(kgf·cm)
Contactor	Main circuit	M12	2～200㎟	2-12 ～ 200-12	35～45 (350～450)
	Control circuit	M3.5	φ1～1.6 0.5～2㎟	1.25-3.5 ～ 2-3.5	0.8～1.0 (8～10)
Thermal overload relay	Main circuit	M10	2～200㎟	2-12 ～ 200-12	35～45 (350～450)
	Control circuit	M3.5	φ1～1.6 0.5～2㎟	1.25-3.5 ～ 2-3.5	0.8～1.0 (8～10)

Magnetic contactor (open type) RSK-300J・400J

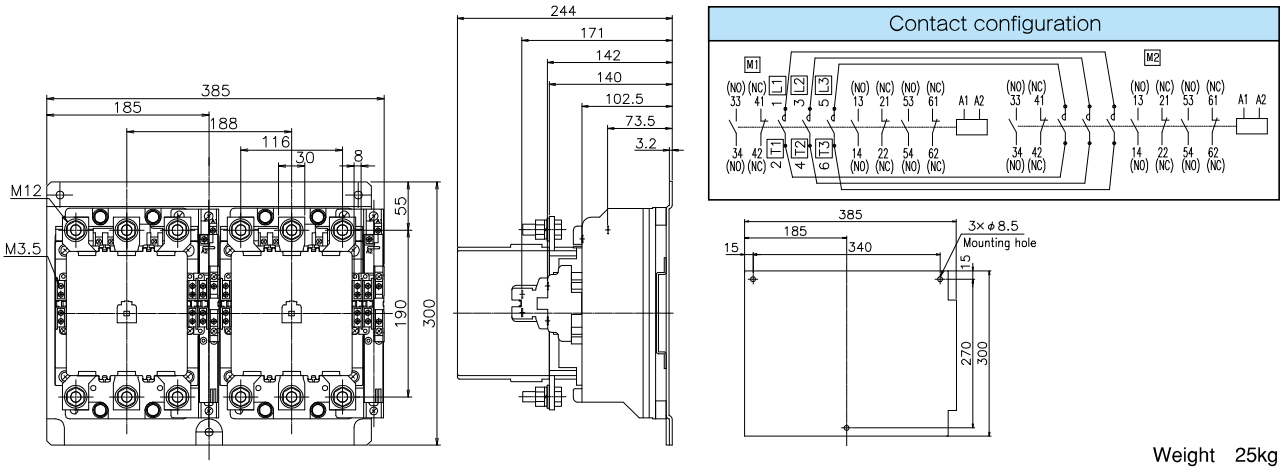

Weight 25kg

Magnetic starter (open type) RSK-300JT・400JT・300JGT・400JGT

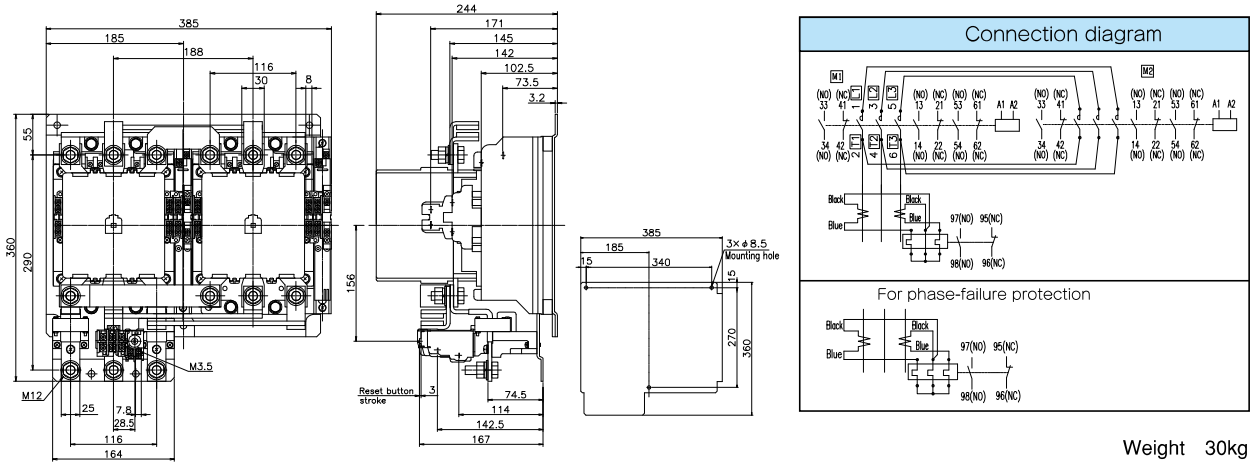

Weight 30kg

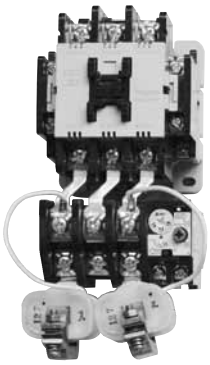

Features

Motors used in high-inertia blowers, fans, centrifuges and similar machinery have long starting times, and standard thermal overload relays will often trip unnecessarily. The slow-trip thermal overload relay is highly suitable for overload protection of these high-inertia motors.

Model explanation

PAK — 21 JT 20 — SL2 C

Type
PAK ···Non-reversing model

Model			
J		H	
11	35	50	125
12	50	65	150
20		80	
21		95	
26		100	

J	H	Specifications
JT	HT	Magnetic starter (without enclosure)
JGT	HGT	Magnetic starter (without enclosure)

Auxiliary contact configuration
PAK-11J～20J
Blank·····1NO
31·····1NC
PAK-21J
Blank·····1NO1NC
20·····2NO
02·····2NC
PAK-26J～150H
Blank·····2NO2NC

Career mark
Except for 50J, 95H models.

Ratings, performance and specifications

Item	Page
●Rated capacity and operational current	9
●Characteristics and performance	15
●Auxiliary contact ratings	10
●Operating coil ratings	11
●Conforming wire size and tightening torque	27

Outline dimensions

The maximum dimensions and mounting methods are given below.

Model	Dimensions (mm)					Mounting pitch (mm)			Weight (kg)	
	W①	W②	H①	H②	D	a	b	Hole	①	②
PAK-11JT-SL2C PAK-12JT-SL2C	(119)		(141)	(160)	77	35	60	2-φ4.6	0.56	0.63
PAK-20JT-SL2C	(119)		(141)	(160)	80.5	35	60	2-φ4.6	0.58	0.65
PAK-21JT-SL2C	(119)		(141)	(160)	80.5	56	60	2-φ4.6	0.63	0.7
PAK-26JT-SL2C PAK-35JT-SL2C PAK-50JT-SL2	(82)		(172)		(114)	60~65	70	2-φ4.6	1.07	1.14
PAK-50HT-SL2C	107.5	(111)	(202)		113.5	90	85	2-φ5.8	1.85	1.93
PAK-65HT-SL2C PAK-80HT-SL2C PAK-95HT-SL2	107.5	(111)	(202)		113.5	90	85	2-φ5.8	2.05	2.13
PAK-100HT-SL2C PAK-125HT-SL2C	(116)	(122)	(265)		140	90	85	2-φ5.8	3.85	3.93
PAK-150HT-SL2C	125		(271)		156.5	100	124	2-φ7	4.76	4.84

Notes. ①Weight for standard model is indicated.
②Weight for phase-failure protection model is indicated.
Dimensions in parentheses indicates for reference dimensions.

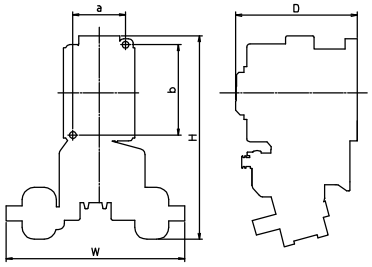

PAK−11JT~21JT−SL2C

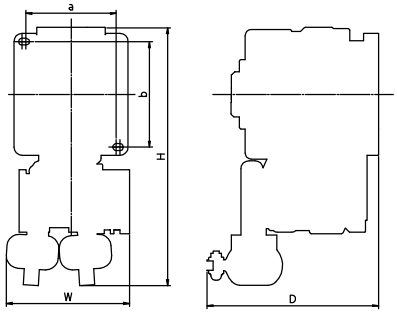

PAK−26JT,35JT−SL2C
PAK−50JT−SL2

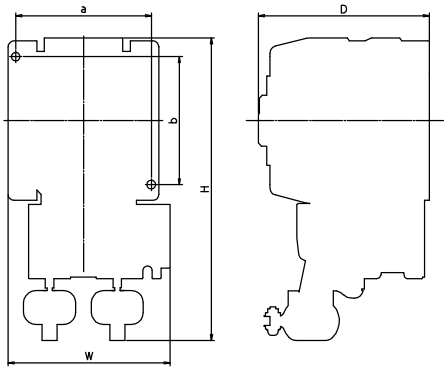

PAK−50HT~80HT−SL2C
PAK−95HT−SL2

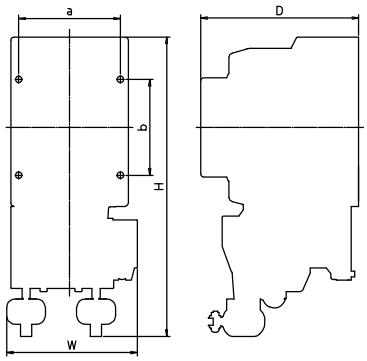

PAK−100HT,125HT−SL2C

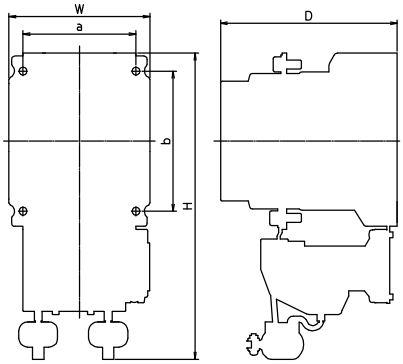

PAK−150HT−SL2C

Connection diagram

PAK−11JT~20JT−SL2C
PAK−11JGT~20JGT−SL2C

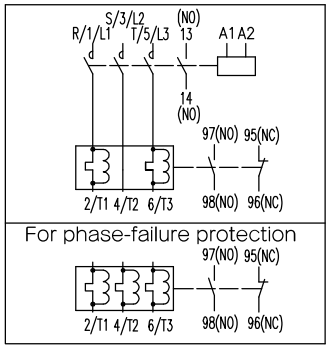

PAK−21JT−SL2C
PAK−21JGT−SL2C

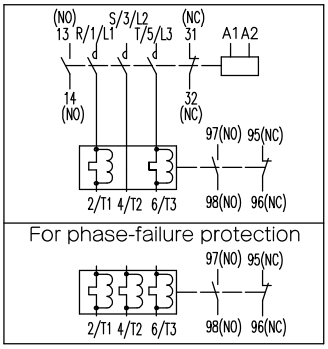

PAK−26JT~50JT−SL2(C)
PAK−26JGT~50JGT−SL2(C)

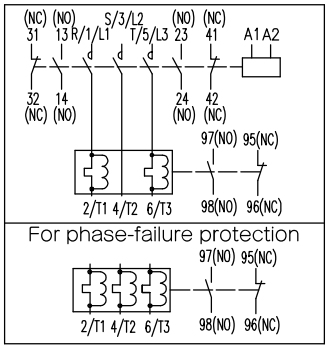

PAK−50HT~150HT−SL2C
PAK−50HGT~150HGT−SL2C

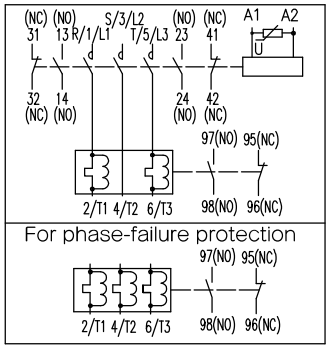

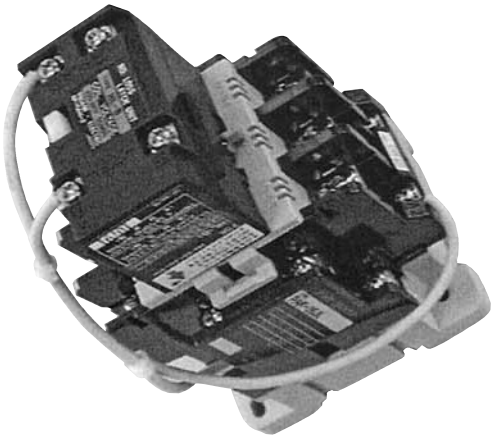

Features

- Contacts do not open at the time of blackout or voltage drop.
- Integrating reliable latching mechanism to magnetic contactors, which makes excitation happenes only on closing and opening.
  For another time, contactors will be maintained by mechanical mechanism.
- Magnetic contactors will not open even through blackout, momentary blackout or voltage drop.
- Instand excitation mechanism make contactors to save power consumption and to operate silently.
- Reversing type mechanical latch magnetic contactors will be suitable for change-over use of normal power supply and standby power supply such as private power generator, because an electrical and mechanism interlocking circuit is provided.
- Sequence can be checked easily by manual closing/opening.
- Built-in self-demagnetization contact provided with these contactors.

Model explanation

PAK — 21 JL

Type
PAK ···Non-reversing model
RSK ···Reversing model

Model	
J	H
21	80
35	150
	220

Selection table

Frame			21JL	35JL	80HL	150HL	220HL
Model type	Non-reversing magnetic contactor		PAK-21JL	PAK-35JL	PAK-80HL	PAK-150HL	PAK-220HL
	Reversing magnetic contactor		RSK-21JL	RSK-35JL	RSK-80HL	RSK-150HL	RSK-220HL
Main circuit ratings	AC-3:3-phase squirrel-cage induction motor	200-220V	5.5kW/26A	11kW/50A	25kW/100A	50kW/200A	80kW/300A
		380-440V	11kW/25A	22kW/45A	45kW/90A	80kW/150A	105kW/210A
	AC-1: Resistive load	200-220V	32A	60A	110A	200A	300A
		380-440V	32A	60A	110A	200A	260A
	Rated thermal current(A)		32A	60A	110A	200A	300A
Auxiliary circuit ratings	AC-15: coil load	100-110V	10A	10A	10A	10A	10A
		200-220V	6A	6A	6A	6A	6A
		380-440V	3A	3A	3A	3A	3A
	Rated thermal current(A)		10A	10A	10A	10A	10A
Auxiliary contact configuration	Non-reversing magnetic contactor		1NO	1NO2NC	1NO2NC	1NO2NC	1NO2NC
	Reversing magnetic contactor		1NO×2	1NO2NC×2	1NO1NC×2	1NO1NC×2	1NO1NC×2
Performance	Mechanical life(×10⁶ ops)		0.25	0.25	0.25	0.25	0.25
	Electrical life(×10⁶ ops)		0.25	0.25	0.25	0.25	0.25
	Switching frq(ops/hour)		600	600	600	600	600
	IEC60947-4-1		AC-3	AC-3	AC-3	AC-3	AC-3
Operating current(A) (AC200V)		closing	0.33	0.53	1.21	7.28	7.28
		opening	0.84	0.84	0.84	2.13	2.13
Operating voltage (V)		closing(less or equal)	150	150	150	160	160
		opening(less or equal)	160	160	160	160	160
Operating time (ms)		closing	8~30	8~30	8~30	16~35	16~35
		opening	8~25	8~25	8~25	10~30	10~30
Closing & breaking current(A)			10 times of an AC-3-class rated operating current				
Coil ratings		AC24V	24V 50／60Hz				
		AC48V	48V 50／60Hz				
		AC100V	100-110V 50／60Hz				
		AC200V	200-220V 50／60Hz				
		AC240V	220-240V 50／60Hz				
		DC100V	DC100-120V				
		DC200V	DC200-240V				

Dimensions

PAK-21JL

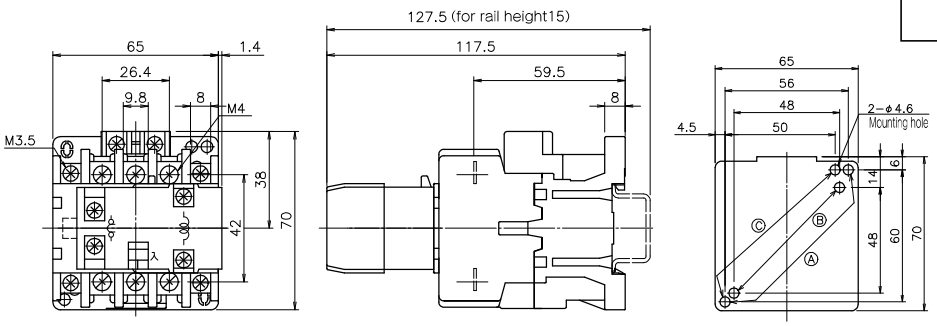

Ⓐ 56× 60 (Recommended mounting point)
Ⓑ 48× 48
Ⓒ 50× 60

Connection diagram

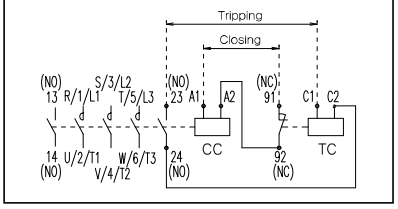

CC:Closing coil
TC:Tripping coil

Note. Operating coil is short time rated, please be sure to connect demagnetize contact point serially.

Weight 0.46kg

PAK-35JL

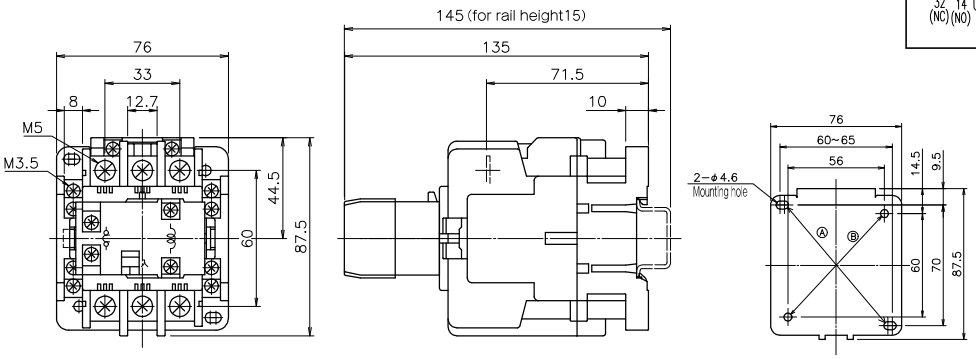

Ⓐ 60~ 65× 70 (Recommended mounting point)
Ⓑ 56× 60

Connection diagram

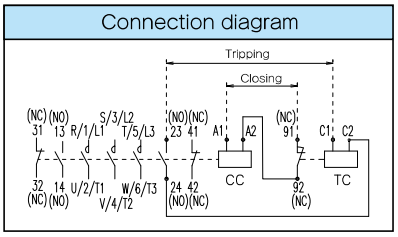

CC:Closing coil
TC:Tripping coil

Note. Operating coil is short time rated, please be sure to connect demagnetize contact point serially.

Weight 0.78kg

PAK-80HL

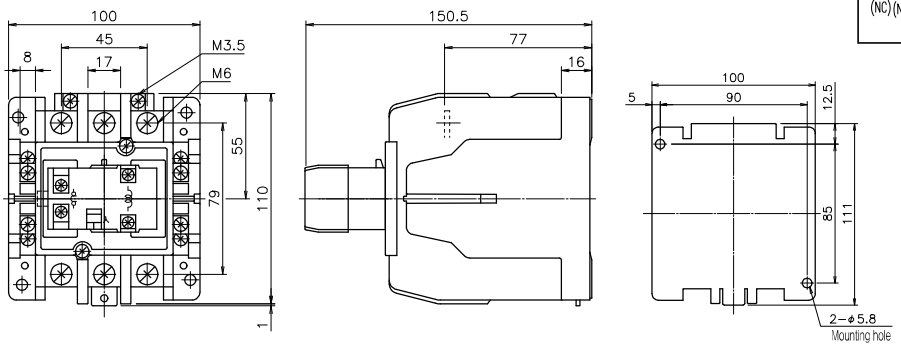

Connection diagram

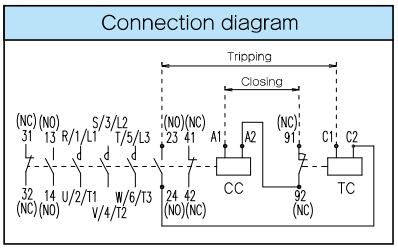

CC:Closing coil
TC:Tripping coil

Note. Operating coil is short time rated, please be sure to connect demagnetize contact point serially.

Weight 1.6kg

PAK-150HL

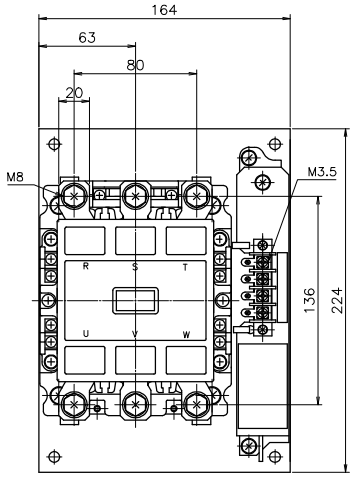

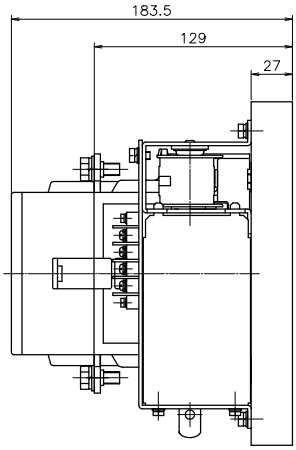

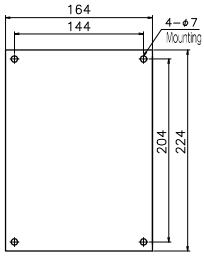

Connection diagram

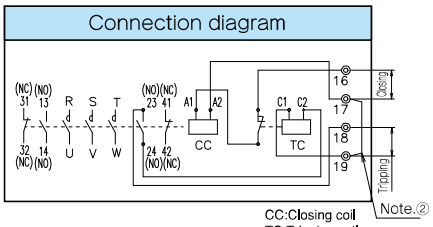

CC:Closing coil
TC:Tripping coil

Note. ①Operating coil is short time rated, please be sure to connect demagnetize contact point serially.
②If power supply for closing and tripping is provided separately, please open the shorted line of 17-19 terminals.

Weight 6.8kg

PAK-220HL

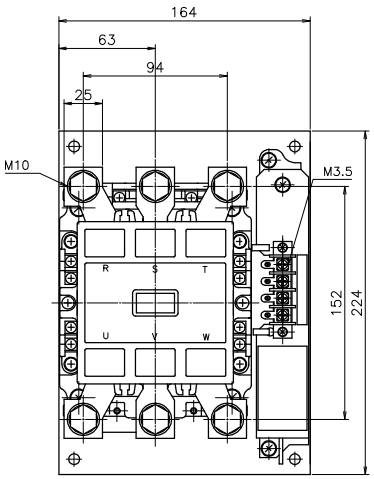

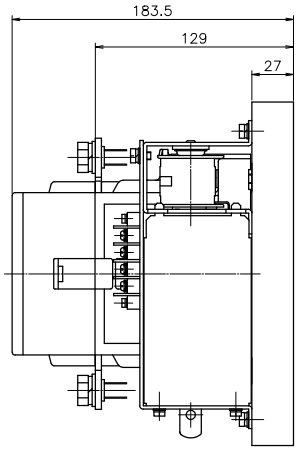

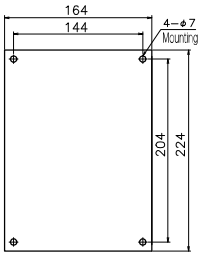

Connection diagram

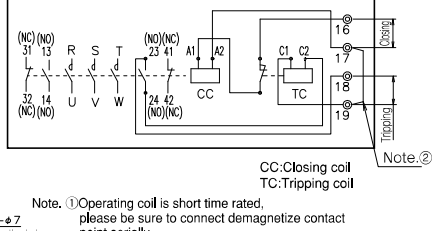

CC:Closing coil
TC:Tripping coil

Note. ①Operating coil is short time rated, please be sure to connect demagnetize contact point serially.
②If power supply for closing and tripping is provided separately, please open the shorted line of 17-19 terminals.

Weight 7.3kg

RSK-21JL

Connection diagram

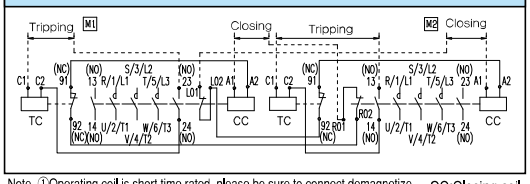

Note. ①Operating coil is short time rated, please be sure to connect demagnetize contact point serially.
②LO1,LO2,RO1,RO2 are contacts for exclusive use of electrical interlock.

CC:Closing coil
TC:Tripping coil

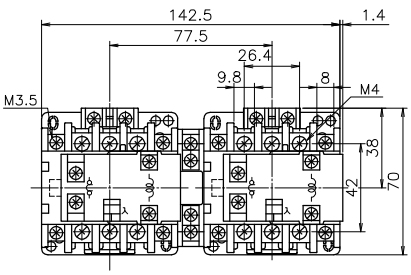

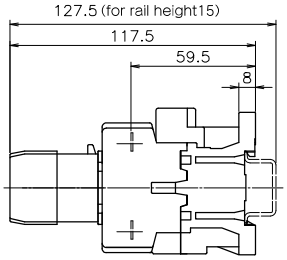

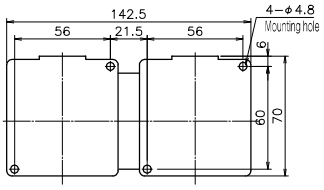

Weight 0.95kg

RSK-35JL

Connection diagram

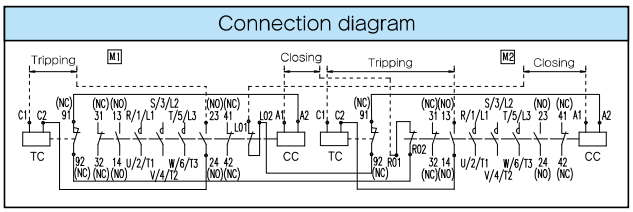

Note. ①Operating coil is short time rated, please be sure to connect demagnetize contact point serially.
②LO1,LO2,RO1,RO2 are contacts for exclusive use of electrical interlock.

CC:Closing coil
TC:Tripping coil

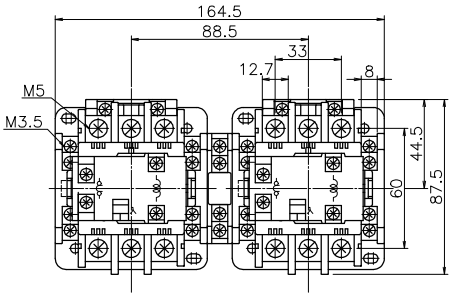

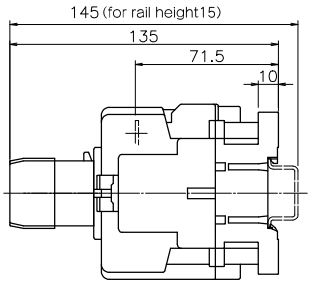

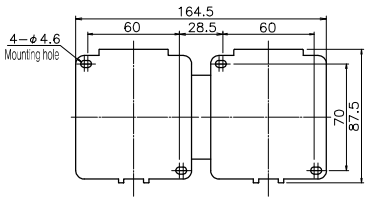

Weight 1.6kg

RSK-80HL

Connection diagram

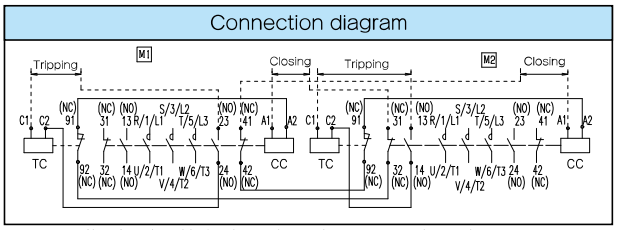

Note. Operating coil is short time rated, please be sure to connect demagnetize contact point serially.

CC:Closing coil
TC:Tripping coil

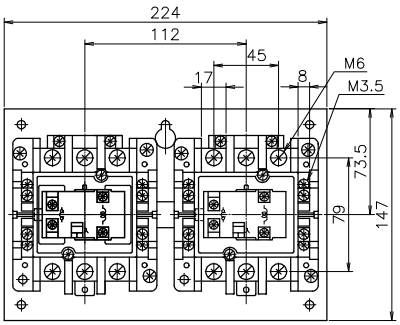

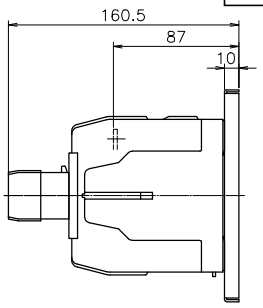

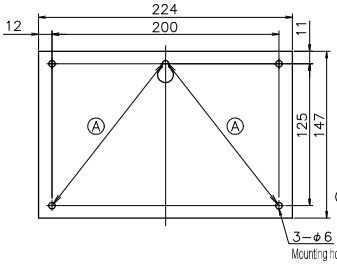

Ⓐ 200×125 3point(Recommended maunting point)
200×125 4point(Mountable)

Weight 3.62kg

RSK-150HL

Connection diagram

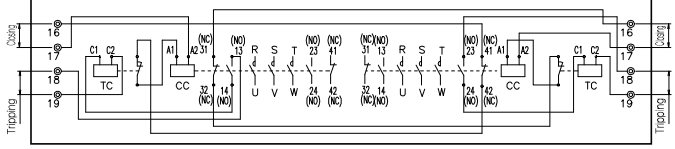

CC:Closing coil
TC:Tripping coil

Note. Operating coil is short time rated, please be sure to connect demagnetize contact point serially.

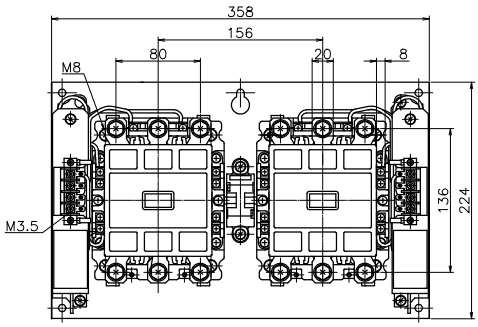

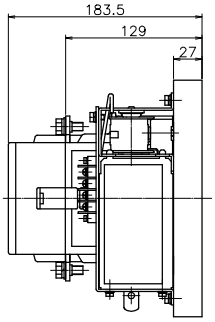

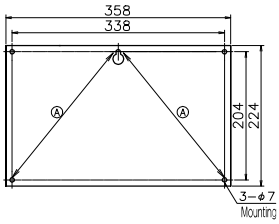

Ⓐ 338×204 3point (Recommended mounting hole)
338×204 4point (Mountable)

Weight 13.5kg

RSK-220HL

Connection diagram

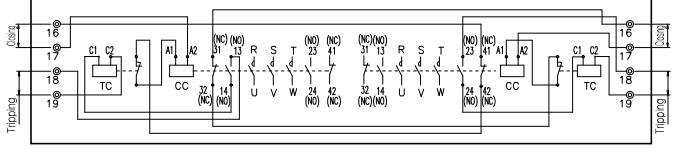

CC:Closing coil
TC:Tripping coil

Note. Operating coil is short time rated, please be sure to connect demagnetize contact point serially.

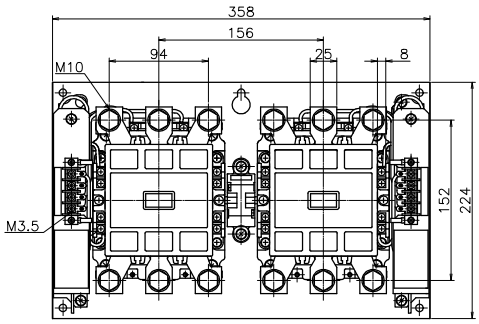

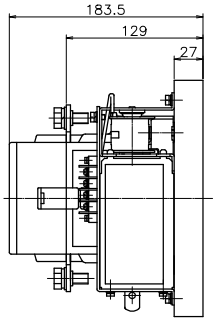

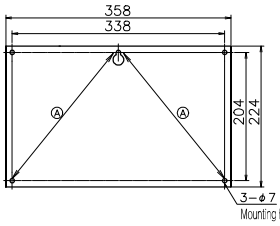

Ⓐ 338×204 3point (Recommended mounting point)
338×204 4point (Mountable)

Weight 14kg

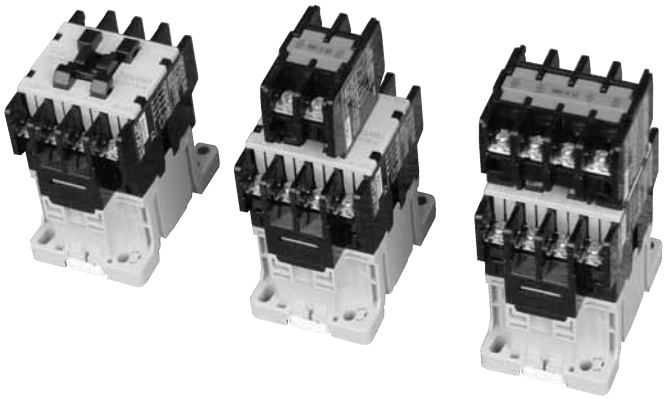

Features

The twin-contact design improves contact reliability.

Model explanation

PAK — 8 JS 44

- PAK: Type
- 8: Frame
- JS: Specifications
  - JS……Standard magnetic relay
- 44: Contact configuration

40…4NO	33…3NO3NC
31…3NO1NC	80…8NO
22…2NO2NC	71…7NO1NC
60…6NO	62…6NO2NC
51…5NO1NC	53…5NO3NC
42…4NO2NC	44…4NO4NC

※An auxiliary contact unit is added for more than four contacts (see page 84 for auxiliary contact units).

Performance and specifications

Item	Page
●Operating magnet characteristics	12
●Operating coil ratings	11

Selection table

Appearance			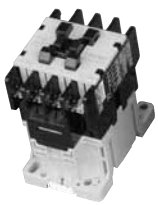		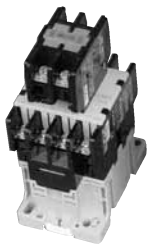	
Model			PAK-8JS			
Number of contacts			4		6	8
Contact configuration			4NO · 3NO1NC · 2NO2NC		6NO · 5NO1NC · 4NO2NC · 3NO3NC	8NO · 7NO1NC · 6NO2NC 5NO3NC · 4NO4NC
Rated thermal current(A)			10			
AC	AC Performance（IEC 60947-5-1）		AC-15	AC-15	AC-12	AC-12
	Electrical life（×10^6 ops）		1	0.5	1	0.5
	Mechanical life（×10^6 ops）		5			
	Rated operational current（A）	100-110V	6	10	6	10
		200-240V	4	6	5	6
		380-440V	2	3	4	5
		500-550V	2	3	3	4
DC	DC Performance（IEC 60947-5-1）		DC-13	DC-13	DC-12	DC-12
	Electrical life（×10^6 ops）		1	0.5	1	0.5
	Mechanical life（×10^6 ops）		5			
	Rated operational current（A）	24 V	7	10	10	10
		48 V	1.4	2	10	10
		100-110 V	0.7	1	7	10
		200-220 V	0.18	0.25	0.8	1.2
Minimum operating voltage/current			24V 10mA			
DIN rail mounting			○			

Notes① AC-15: AC Magnetic load control
AC-12: Resistive load control
DC-13: DC Magnetic load control
DC-12: Resistive load control

Dimensions and specifications

PAK-8JS (4P)

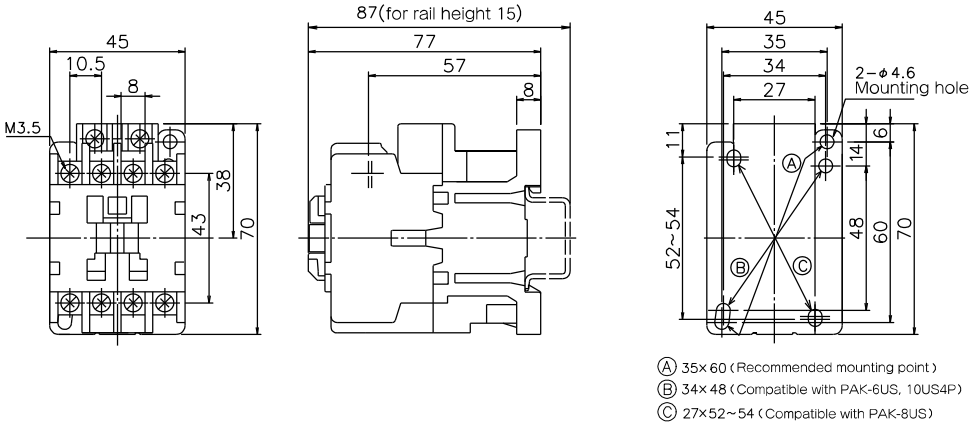

Ⓐ 35×60 (Recommended mounting point)
Ⓑ 34×48 (Compatible with PAK-6US, 10US4P)
Ⓒ 27×52~54 (Compatible with PAK-8US)

Conforming wire and tightening torque	
Item	Specifications
Screw size	M3.5
Applicable wire	φ1~1.6 0.5~2mm²
Applicable round crimp-type terminals	1.25-3.5 2-3.5
Tightening torque N·m(Kgf·cm)	0.8~1.2 (8~12)

Weight 0.3kg

PAK-8JS (6P)

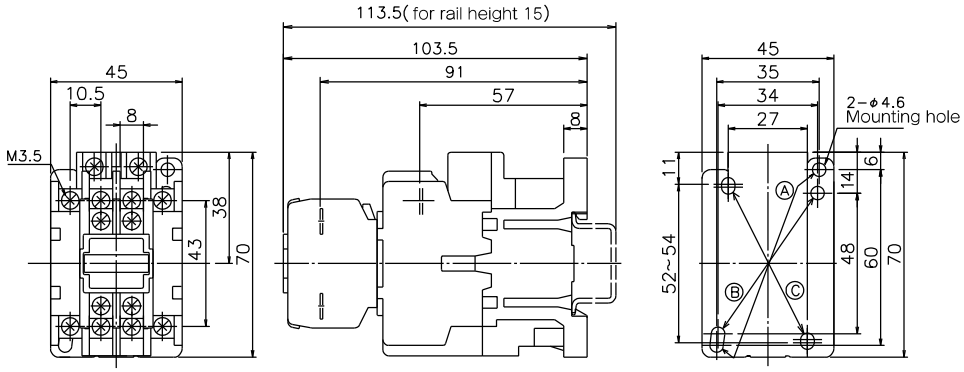

Ⓐ 35×60 (Recommended mounting point)
Ⓑ 34×48 (Compatible with PAK-6US, 10US4P)
Ⓒ 27×52~54 (Compatible with PAK-8US)

Conforming wire and tightening torque	
Item	Specifications
Screw size	M3.5
Applicable wire	φ1~1.6 0.5~2mm²
Applicable round crimp-type terminals	1.25-3.5 2-3.5
Tightening torque N·m(Kgf·cm)	0.8~1.2 (8~12)

Weight 0.325kg

PAK-8JS (8P)

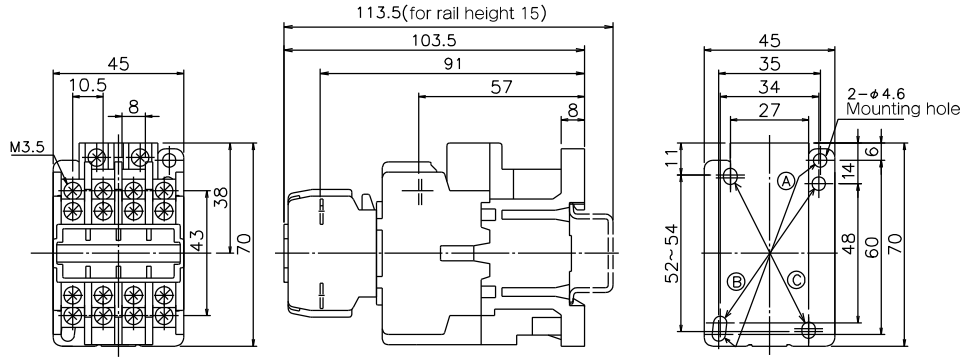

Ⓐ 35×60 (Recommended mounting point)
Ⓑ 34×48 (Compatible with PAK-6US, 10US4P)
Ⓒ 27×52~54 (Compatible with PAK-8US)

Conforming wire and tightening torque	
Item	Specifications
Screw size	M3.5
Applicable wire	φ1~1.6 0.5~2mm²
Applicable round crimp-type terminals	1.25-3.5 2-3.5
Tightening torque N·m(Kgf·cm)	0.8~1.2 (8~12)

Weight 0.345kg

Contact configuration diagrams

Model	Contact configuration
PAK-8JS40	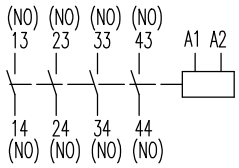
PAK-8JS31	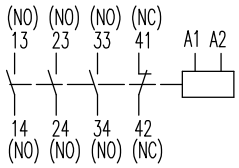
PAK-8JS22	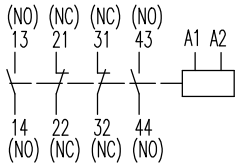

Model	Contact configuration
PAK-8JS60	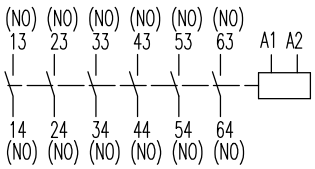
PAK-8JS51	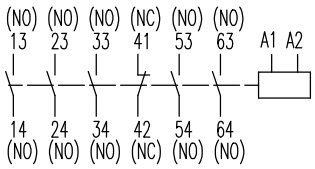
PAK-8JS42	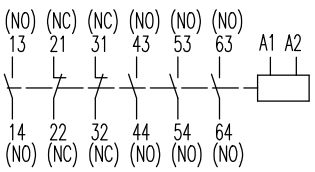
PAK-8JS33	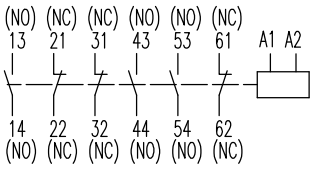

Model	Contact configuration
PAK-8JS80	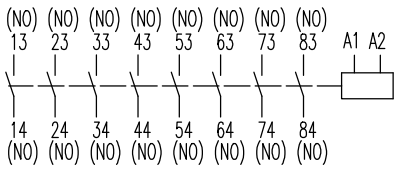
PAK-8JS71	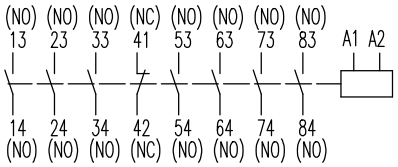
PAK-8JS62	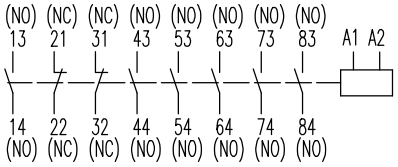
PAK-8JS53	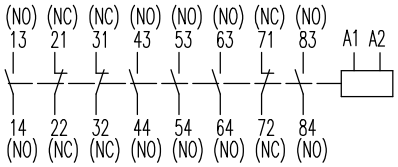
PAK-8JS44	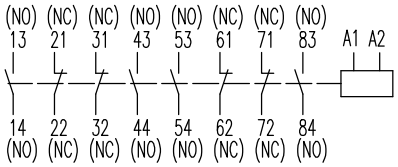

4 poles contactors

Features

- 4 poles type.
- Small size.
- High breaking capacity.

Performance and specifications

Terminal	Contactors	AC-3 440V		AC-1 440V	Aux. Contact		Poles
		kW	HP	A	NO	NC	
DIN & tab	PAK- 6JC-S659	4	5.5	15	–	–	4
	PAK-11J-S659	4.5	6	20	–	–	
	PAK-12J-S659	5.5	7.5	26	–	–	
	PAK-20J-S659	11	15	32	–	–	

Dimensions

PAK-6JC-S659

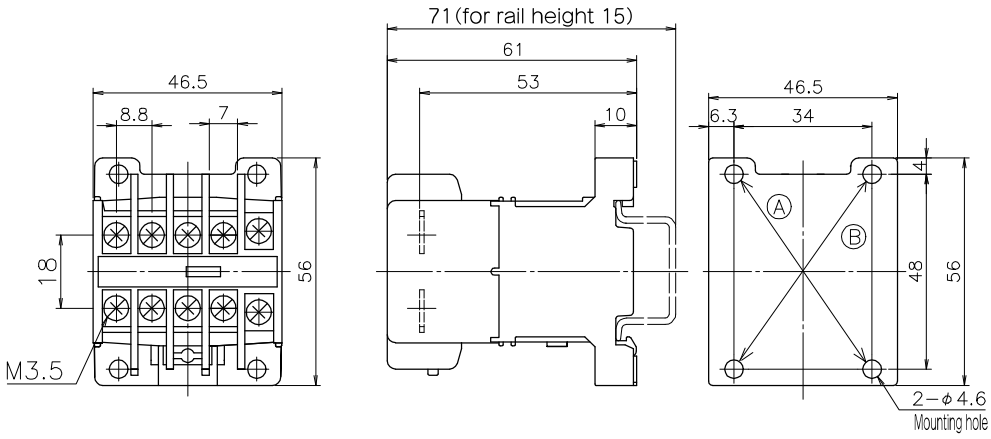

Contact configuration

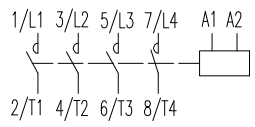

Ⓐ 34×48 (Recommended mounting hole)
Ⓑ 34×48 (Compatible with PAK-6H)

Weight 6JC=0.17kg

PAK-11J · 12J-S659

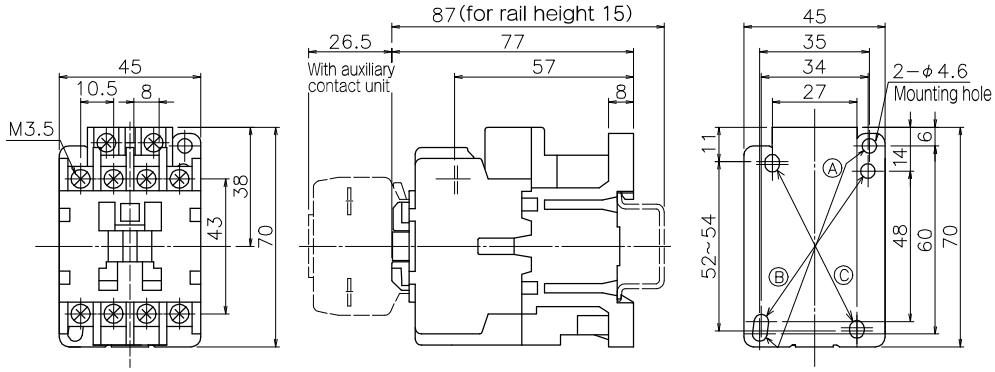

Contact configuration

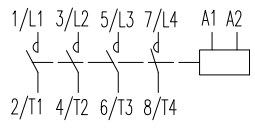

Ⓐ 35×60 (Recommended mounting hole)
Ⓑ 34×48 (compatible with PAK-6H,11H,11HK)
Ⓒ 27×52~54

Weight 11J・12J=0.3kg

PAK-20J-S659

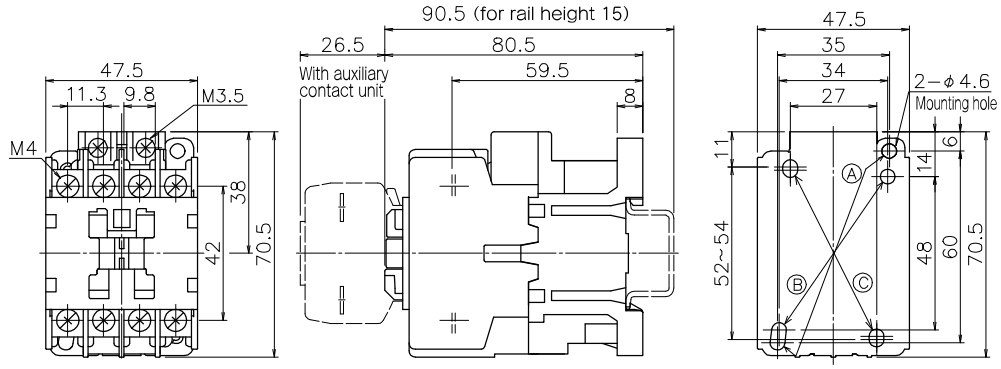

Contact configuration

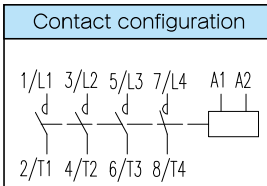

Ⓐ 35×60 (Recommended mounting hole)
Ⓑ 34×48
Ⓒ 27×52~54

Weight 20J=0.32kg

3

Types	standard model	TJ-18JA	TJ-18	TJ-18N	TJ-35		TJ-50	
	phase-failure protection model	GTJ-18JA	GTJ-18	GTJ-18N	GTJ-35		GTJ-50	
	3-heaters protection model	TJ-18JA-3	TJ-18-3	TJ-18N-3	TJ-35-3		TJ-50-3	
Appearance					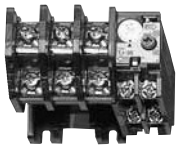		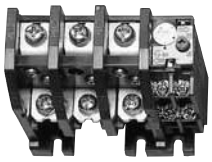	
Combination of magnetic contactors		PAK-6JC CLK-15JC ①	PAK-11J PAK-12J PAK-20J PAK-21J CLK-25J3 CLK-20J CLK-26J	(Individual use)	PAK-26J PAK-35J PAK-50J	CLK-35J3 CLK-35J CLK-50J CLK-65J	PAK-50H PAK-65H PAK-80H PAK-95H	CLK-65H CLK-80H CLK-100H
Poles		3		3	3		3	
Heater elements	standard model	2		2	2		2	
	phase-failure protection model	3		3	3		3	
	3-heaters protection model	3		3	3		3	
Individual use		—		Possible	Possible		Possible	
Rated current (A)	Standard model Phase-failure protection model (3-point set current scale)	0.2 — 0.25 — 0.3 0.24 — 0.3 — 0.36 0.28 — 0.35 — 0.42 0.4 — 0.5 — 0.6 0.56 — 0.7 — 0.84 0.64 — 0.8 — 0.96 0.8 — 1 — 1.2 1 — 1.2 — 1.4 1.2 — 1.4 — 1.6 1.4 — 1.8 — 2.2 1.8 — 2.3 — 2.8 2.4 — 3 — 3.6 2.9 — 3.6 — 4.3 3.7 — 4.6 — 5.5		4 — 5 — 6 5.4 — 6.7 — 8 6 — 7.5 — 9 7.4 — 9.2 — 11 8.8 — 11 — 13 11 — 13 — 15 12 — 15 — 18 15 — 18 — 20 18 — 22 — 26 22 — 26	0.2 — 0.25 — 0.3 0.24 — 0.3 — 0.36 0.28 — 0.35 — 0.42 0.4 — 0.5 — 0.6 0.56 — 0.7 — 0.84 0.64 — 0.8 — 0.96 0.8 — 1 — 1.2 1 — 1.2 — 1.4 1.2 — 1.4 — 1.6 1.4 — 1.8 — 2.2 1.8 — 2.3 — 2.8 2.4 — 3 — 3.6 2.9 — 3.6 — 4.3 3.7 — 4.6 — 5.5 4 — 5 — 6		5.4 — 6.7 — 8 6 — 7.5 — 9 7.4 — 9.2 — 11 8.8 — 11 — 13 11 — 13 — 15 12 — 15 — 18 15 — 18 — 20 18 — 22 — 26 21 — 26 — 31 24 — 30 — 36 28 — 34 — 42 34 — 42 — 48 40 — 48 — 52 46 — 56 — 65	12 — 15 — 18 18 — 22 — 26 21 — 26 — 31 24 — 30 — 36 28 — 34 — 42 34 — 42 — 48 40 — 48 — 58 46 — 56 — 64 56 — 68 — 80 68 — 80 — 94 76 — 90 — 100	
③	Fast-trip model range ④ (1-point set current fixed)	2.8～26			4～65		20～100	
Adjusting dial		Ampere scale			Ampere scale		Ampere scale	
Resetting method		Manual/automatic			Manual/automatic		Manual/automatic	
Ambient temperature compensation		Provided			Provided		Provided	
Manual check button		Provided			Provided		Provided	
Indication of operation		Provided			Provided		Provided	
Output Contact		1NO1NC			1NO1NC		1NO1NC	
Rated ope-current of output contacts (A) AC15	Contacts	1NO	1NC		1NO	1NC	1NO	1NC
	100-110V	2	3		4	4	4	4
	200-220V	1	2		2	3	2	3
	380-440V	0.5	1.5		1	1.5	1	1.5
	500-550V	0.4	0.7		0.8	1	0.8	1

Notes. ①For PAK-6JC,the accessories for connection are not necessary.
②However 3-heaters protection models for T-400 and T-600 are not manutactured.

TJ-125		TJ-220		TJ-400N		T-400		T-600	
GTJ-125		GTJ-220		GTJ-400N		GT-400		GT-600	
TJ-125-3		TJ-220-3		TJ-400N-3		—		—	
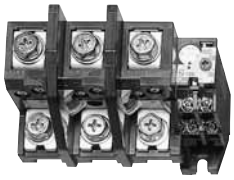						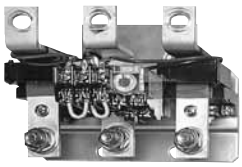		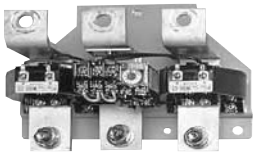	
PAK-100H CLK-125H PAK-125H CLK-150H PAK-150H CLK-200H		PAK-220H CLK-250H PAK-270H		(Individual use)		PAK-300J PAK-400J		PAK-600J	
3		3		3		3		3	
2		2		2		2		2	
3		3		3		3		3	
3		3		3		3		3	
Possible		—		Possible		—		—	
34 — 42 — 48 40 — 48 — 58 46 — 56 — 64 56 — 68 — 80 68 — 80 — 94 76 — 90 — 100 85 — 105 — 125 110 — 130 — 150 130 — 160 — 190 170 — 200 — 230		65 — 80 — 95 85 — 105 — 125 105 — 130 — 150 130 — 160 — 190 150 — 190 — 230 185 — 230 — 275 215 — 270 — 325 265 — 330 — 400		150 — 190 — 230 185 — 230 — 275 215 — 270 — 325 265 — 330 — 400 310 — 390 — 470 400 — 500 — 600		110 — 140 — 180⑤ 170 — 240 — 290 280 — 380 — 440		110 — 140 — 180⑤ 170 — 240 — 290 280 — 380 — 440 400 — 500 — 600	
						110 — 140 — 170⑤ 140 — 180 — 220 200 — 240 — 280 240 — 300 — 360 300 — 380 — 450		110 — 140 — 170⑤ 140 — 180 — 220 200 — 240 — 280 240 — 300 — 360 300 — 380 — 450 400 — 500 — 600	
60～150		—		—		—		—	
Ampere scale		Ampere scale		Ampere scale		Ampere scale		Ampere scale	
Manual/automatic		Manual/automatic		Manual/automatic		Manual/automatic		Manual/automatic	
Provided		Provided		Provided		Provided		Provided	
Provided		Provided		Provided		Provided		Provided	
Provided		Provided		Provided		Provided		Provided	
1NO1NC		1NO1NC		1NO1NC		1NO1NC		1NO1NC	
1NO	1NC	1NO	1NC	1NO	1NC	1NO	1NC	1NO	1NC
4	4	4	4	4	4	2(0.5) ⑥	3(1) ⑥	2(0.5) ⑥	3(1) ⑥
2	3	2	3	2	3	1(0.5) ⑥	2(1) ⑥	1(0.5) ⑥	2(1) ⑥
1	1.5	1	1.5	1	1.5	0.5(0.2) ⑥	1(0.3) ⑥	0.5(0.2) ⑥	1(0.3) ⑥
0.8	1	0.8	1	0.8	1	—	—	—	—

③The rated current of thermal overload relays for magnetic contactor must be selected within the rated operational current of magnetic contactors.
④Phase-failure protection models can produce more than 8A.
⑤For T-400 to T-600, upper column indicates for 2-heaters (standard) models and lower for phase-failure protection models.
⑥Value in parentheses indicates at auto-reset condition.
⑦Standard and phase-failure protection models are also available in slow-trip models.

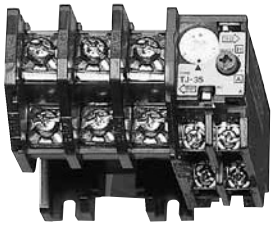
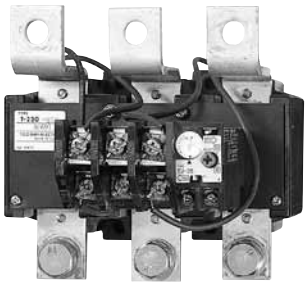

Features

- It protects motor from burnout due to overload and phase-failure.
- With operating indication.
  An output contact is electrically insulated contact of 1NO1NC.
- Automatic compensation for ambient temperature.
  Operating current will automatically adjusted throughout the ambient temperature range of -20 to +60℃.
- One-touch selection of manual or automatic reset.
  Just press the reset button then turn 90 degree for change over the resetting method.
- TJ-18N, TJ-35～TJ-125 and TJ-400N（GTJ-18N, GTJ-35～GTJ-125 and GTJ-400N） can be used independently.

Model explanation

TJ — 35 T26J — 3

Type

TJ …Standard type
GTJ …Phase-failure protaction type
※In the case of 400,600 frames, it becomes the following type.
T …Standard type
GT …Phase-failure protaction type

Frame

Standard type	Phase-failure protection type
18JA	18JA
18	18
18N	18N
35	35
50	50
125	125
220	220
400	400
400N	400N
600	600

Accessories

If required connecting parts for mounting to the contactor, specify the contact frame. However,it is not required for the combination with PAK-6JC.

【Ex】
Specify T26J for a combination with the PAK-26J. For a PAK-H model, the suffix will be H instead of J.

Accessory devices

Code	Standard type	Phase-failure protection type
Blank	2-heaters	—
3	3-heaters	—
SL2	Slow-trip	Slow-trip
F	Fast-trip	Fast-trip

Performance in balanced circuit

Standards	Standard type		Hot start	Cold start	Ambient temperature
	Non-action	Action			
IEC 60947-4-1 JIS C 8201-4-1	105%Ie Less than 2 hours	120%Ie Less than 2 hours	Trip class 10A 150%Ie 2min Less than	Trip class 10A 720%Ie 2～10s Less than	20℃
			Trip class 20 150%Ie 8min Less than	Trip class 20 720%Ie 6～20s Less than	

Performance in unbalanced circuit

Standards	Phase-failure protection device	Non-action	Action (Hot start)	Ambient temperature
IEC 60947-4-1 JIS C 8201-4-1	Without phase-failure protection device	3-phase : 100%Ie	2-phase : 132%Ie(Less than 2 hours) 1-phase : 0(Less than 2 hours)	20℃
	With phase-failure protection device	2-phase : 100%Ie 1-phase : 90%Ie	2-phase : 115%Ie(Less than 2 hours) 1-phase : 0(Less than 2 hours)	

Notes. ①Ie : Settling
②The value over 30s shell be max operating time by second.

Structure

1. Standard type

Internal structure of standard thermal overload relay(TJ-35)

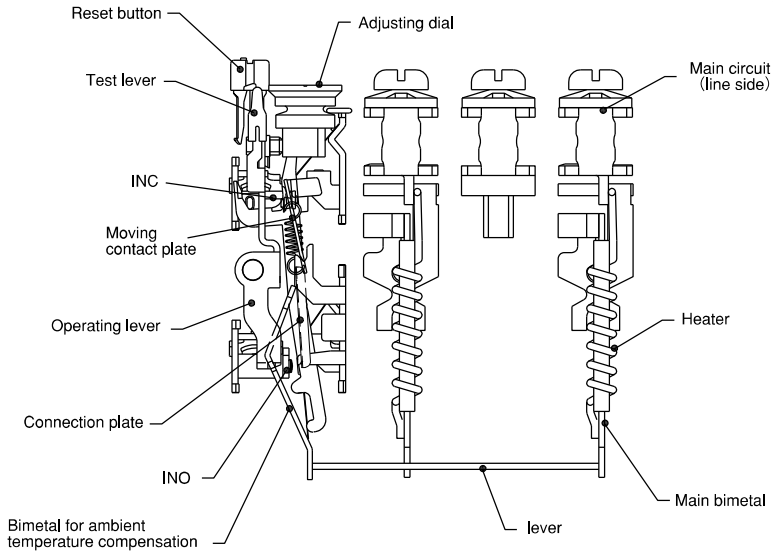

※All models have one-touch changeover mechanism of auto/manual reset. Refer to page 79 for details.

2. Phase-failure protection type

Phase-failure detection is made by using the difference of bend on main bimetals. The differential amplification mechanism, composed of the first,second, and differential motion lever which are very accurate, detects the difference in bend.

A. Rated load mechanism

Bimetals on three phases make "a" bend by load current. First, second and differential motion levers make "a" parallel movement to the left, but the contact does not open.

B. 3-phase overload mechanism

Due to over current, bimetals make more "b" bend than rated load mechanism, and the contact opens.

C. Phase-failure (T phase) mechanism

The bimental of T phase does not bend, but bimetals on R and S phases make "c" bend.

This "c" is amplified y/x times by differential motion lever and the contact is opened.

Thus at the open-phase condition, it operates at lower current than at 3-phase overload current.

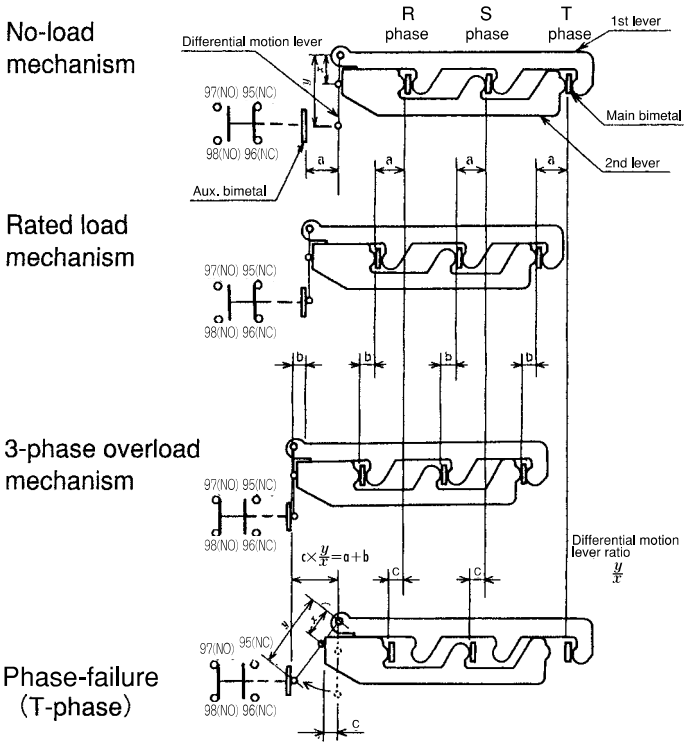

3

Selection guide

220V motor

Heating value (A)	Motor (kW)	Model																			
		TJ-18JA	TJ-18				TJ-35			TJ-50			TJ-125			TJ-220		T-400	T-600
		TJ-18JA-3	TJ-18-3				TJ-35-3			TJ-50-3			TJ-125-3			TJ-220-3			
		GTJ-18JA	GTJ-18				GTJ-35			GTJ-50			GTJ-125			GTJ-220		GT-400	GT-600
		General purpose contactor to be combined																			
		6JC	11J	12J	20J	21J	26J	35J	50J	50H	65H	80H	95H	100H	125H	150H	220H	270H	300J	400J	600J
0.7	0.1																				
1.2	0.2																				
2.3	0.4																				
3.6	0.75																				
5	1.1																				
6.7	1.5																				
9.2	2.2																				
11	2.5																				
11	2.7																				
15	3.7																				
18	4																				
18	4.5																				
22	5.5																				
26	7.5																				
35	10																				
42	11																				
56	15																				
65	18.5																				
70	20																				
80	22																				
90	25																				
105	27																				
105	30																				
130	37																				
130	40																				
160	45																				
180	55																				
200	60																				
240 (240)	75																				
275	80																				
310	90																				
380 (300)	90																				
380 (300)	110																				
400	115																				
500 (500)	132																				
500 (500)	150																				
600	160																				

Note. ①Load current will be different for 3-phase motors with other than four poles, and for non-standard motors. Selected the rated current appropriate for each motor in this case.
②If the same rated current is not available, select the closest current and use the adjusting dial to match it to the rated motor current.
③Rated current in parentheses indicates for GT-400 and GT-600 models.

440V motor

Heating value (A)	Motor (kW)	Model																			
		TJ-18JA	TJ-18				TJ-35			TJ-50			TJ-125			TJ-220		T-400	T-600
		TJ-18JA-3	TJ-18-3				TJ-35-3			TJ-50-3			TJ-125-3			TJ-220-3			
		GTJ-18JA	GTJ-18				GTJ-35			GTJ-50			GTJ-125			GTJ-220		GT-400	GT-600
		General purpose contactor to be combined																			
		6JC	11J	12J	20J	21J	26J	35J	50J	50H	65H	80H	95H	100H	125H	150H	220H	270H	300J	400J	600J
0.35	0.1																				
0.7	0.2																				
1.2	0.4																				
1.8	0.75																				
2.5	1.1																				
3	1.5																				
4.6	2.2																				
5.5	2.5																				
6	2.7																				
7.5	3.7																				
7.5	4																				
9.5	4.5																				
11	5.5																				
15	7.5																				
22	11																				
30	15																				
34	18.5																				
35	20																				
39	22																				
42	25																				
45	26																				
48	27																				
62	30																				
68	37																				
68	40																				
80	45																				
105	55																				
125	60																				
130	75																				
130	80																				
160	90																				
220	110																				
230	115																				
270	132																				
240 (300)	150																				
380 (300)	200																				
380 (380)	200																				
500 (500)	300																				

Note. ①Load current will be different for 3-phase motors with other than four poles, and for non-standard motors. Selected the rated current appropriate for each motor in this case.
②If the same rated current is not available, select the closest current and use the adjusting dial to match it to the rated motor current.
③Rated current in parentheses indicates for GT-400 and GT-600 models.

Auxiliary contact rating

●Conforming to IEC, JIS

Model	Rated thermal current 〔A〕	Rated voltage 〔V〕	Rated operational current 〔A〕				Minimum operational voltage/current
			AC-15		DC-13		
			1NO	1NC	1NO	1NC	
TJ-18 GTJ-18	5	24	4	4	2	2	DC12V, 10mA
		100～110	2	3	0.35	0.35	
		200～220	1	2	0.20	0.20	
		380～440	0.5	1.5	–	–	
		500～550	0.4	0.7	–	–	
TJ-35 125 GTJ-35～125	5	24	4	4	2	2	DC12V, 10mA
		100～110	2	3	0.35	0.35	
		200～220	1	2	0.20	0.20	
		380～440	0.5	1.5	–	–	
		500～550	0.8	1.0	–	–	

●Conforming to UL

Model	Rated thermal current 〔A〕	Rated voltage 〔V〕	Rated operational current 〔A〕				Minimum operational voltage/current
			AC-15		DC-13		
			1NO	1NC	1NO	1NC	
TJ-18-3UL TJ-18-UL	5	24	4	4	2	2	B600
		100～110	2	3	0.35	0.35	
		200～220	1	2	0.20	0.20	
		380～440	0.5	1.5	–	–	
		500～550	0.4	0.7	–	–	
TJ-35～GTJ-35 50-3UL～50-UL	5	24	4	4	2	2	B600
		100～110	2	3	0.35	0.35	
		200～220	1	2	0.20	0.20	
		380～440	0.5	1.5	–	–	
		500～550	0.8	1.0	–	–	

Handling of thermal overload relays

Do not touch the inside of the thermal overload relays.

If the motor stops because of the tripping operation of thermal overload relay, gently press down the reset button for resetting only after the cause is traced and removed.

(Factory setting is manual reset.)

In case of TJ-18～220, if auto resetting is desired, press the reset button down and turn it 90 degree clockwise.

In case of T-400 and T-600, press the reset button down and turn it 90 degree anticlockwise.

In an automatic control circuit in which a self-holding starter contactor is not used, the motor starts automatically by automatically resetting the thermal overload relay.

This may result in motor burnout if care is not taken.

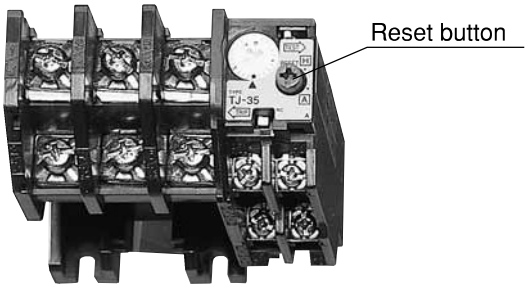

Operation characteristic curves

TJ−18JA
TJ−18
TJ−18N
TJ−18JA−3
TJ−18−3
TJ−18N−3
GTJ−18JA
GTJ−18
GTJ−18N

Trip class 10A

Cold start characteristics

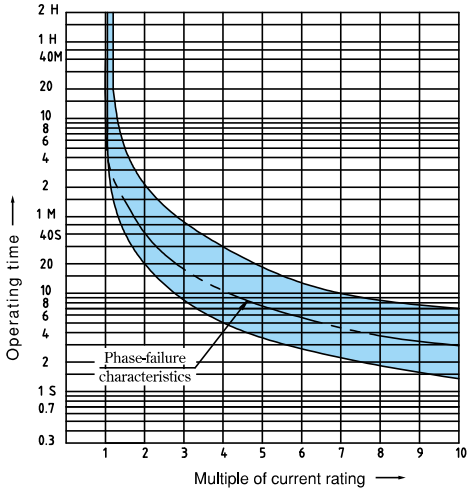

Hot start characteristics

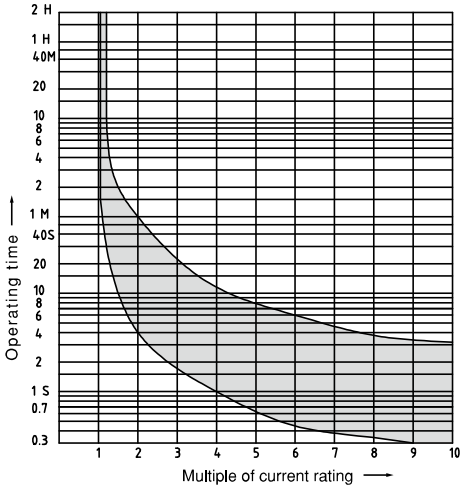

TJ−35
TJ−35−3
GJT−35

Less than 18A - Trip class 10A More than 22A - Trip class 20

Cold start characteristics

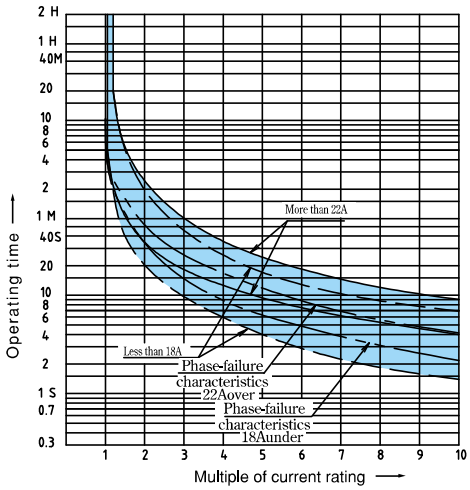

Hot start characteristics

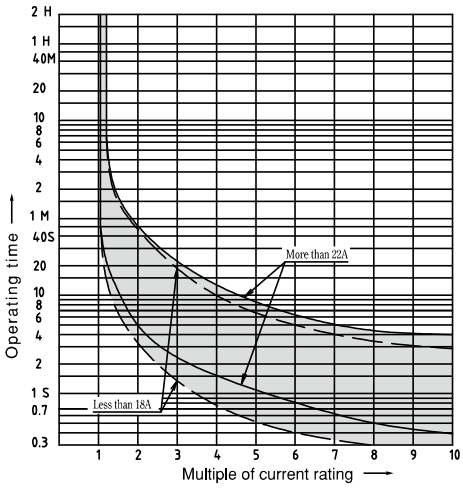

TJ−50
TJ−50−3
GTJ−50

Less than 18A - Trip class 10A More than 22A - Trip class 20

Cold start characteristics

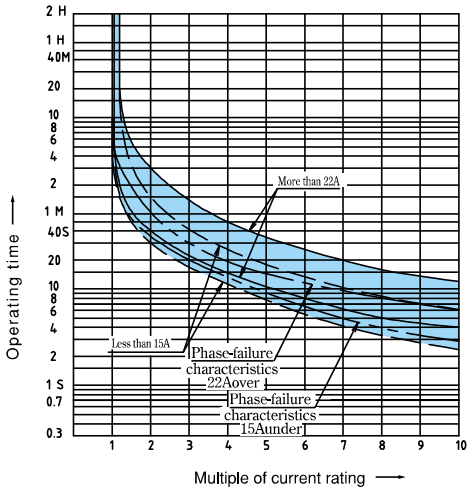

Hot start characteristics

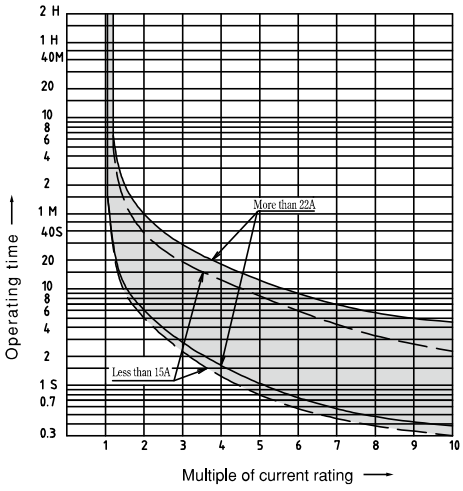

3

TJ−125
TJ−125−3
GTJ−125

Trip class-20

Cold start characteristics

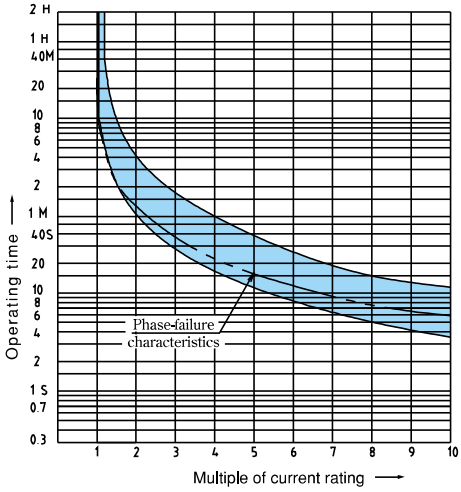

Hot start characteristics

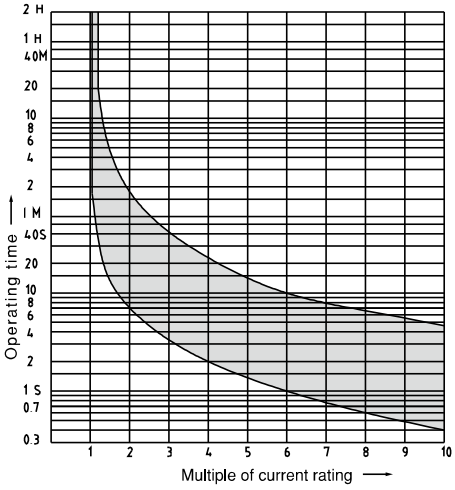

TJ−220
TJ−220−3
GTJ−220

Trip class-10A

Cold start characteristics

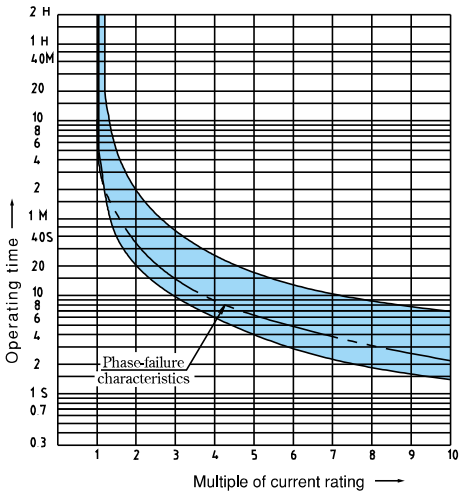

Hot start characteristics

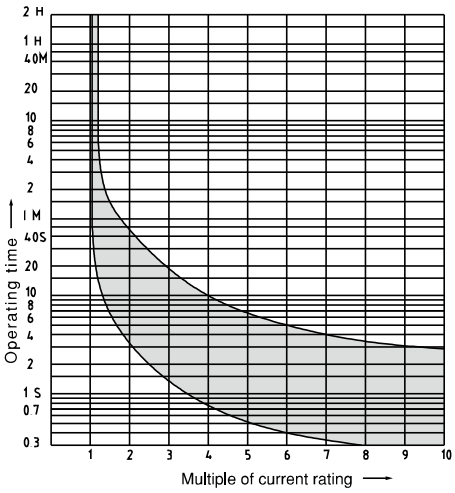

TJ−400N
TJ−400N−3
GTJ−400N

Trip class-10A

Cold start characteristics

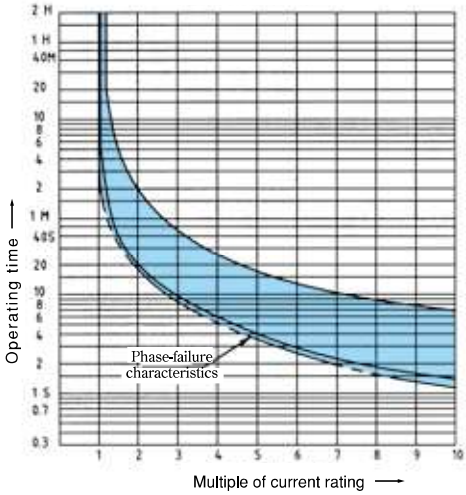

Hot start characteristics

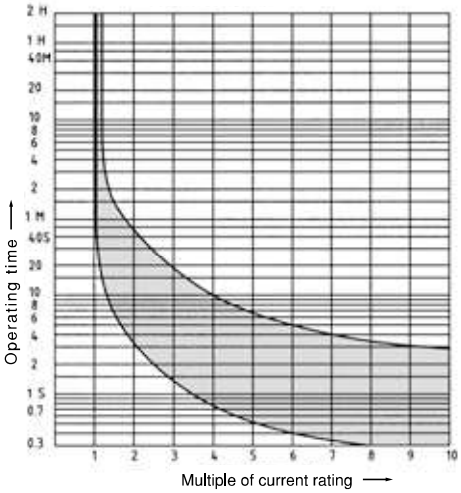

T−400
GT−400

Trip class-10A

Cold start characteristics

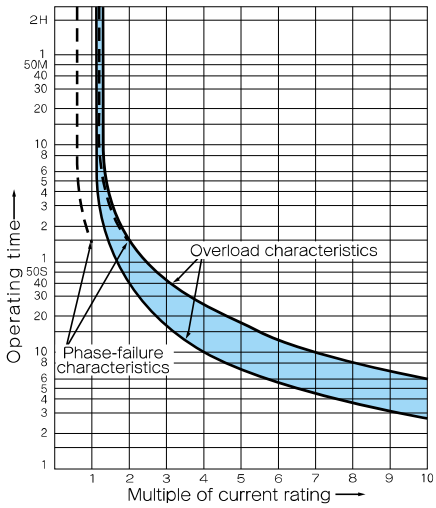

Hot start characteristics

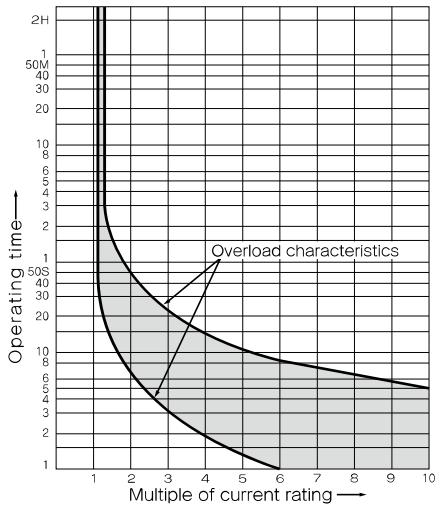

T−600
GT−600

Trip class-10A

Cold start characteristics

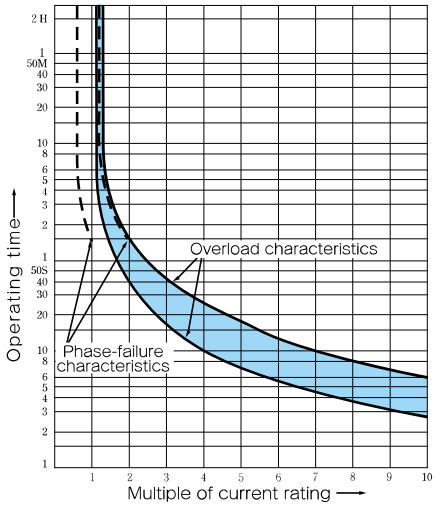

Hot start characteristics

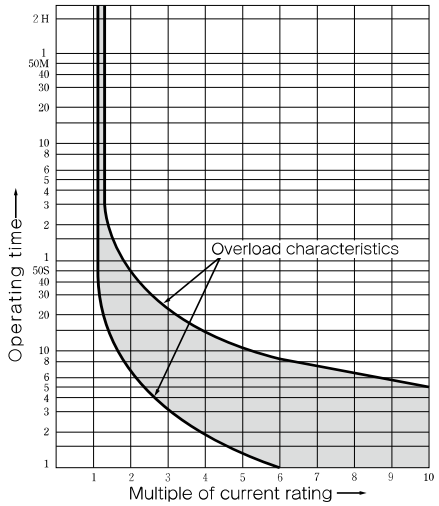

Ambient temperature compensation

Thermal overload relays are provided with an ambient temperature compensating mechanism. At temperature between -20℃ and +60℃, the operation is automatically compensated. The automatic compensating characteristics are showing the minimum operating current based on temperature of 20℃.

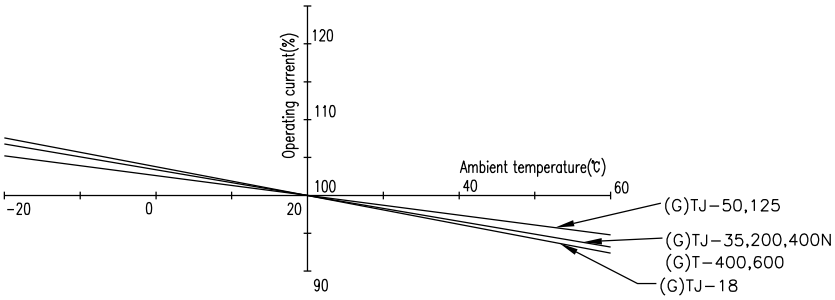

Fast-Trip models

Features

- It is best for protection of compressor motor, under water pump motor etc. from overload and locking.
- With operating indication.
  An output contact is electrically insulated contact of 1NO1NC.
- Automatic compensation for ambient temperature.
  Operating current will automatically adjusted throughout the ambient temperature range of -20 to +60℃.
- One-touch selection of manual or automatic reset.
  Just press the reset button then turn 90 degree for change over the resetting method.
- TJ-18N,TJ-35～TJ-125 and TJ-400N can be used independently.
- Factory-seted rated thermal current is fixed.

Operation characteristic curves

TJ−18JA−F~125−F
TJ−18JA−3F~125−3F

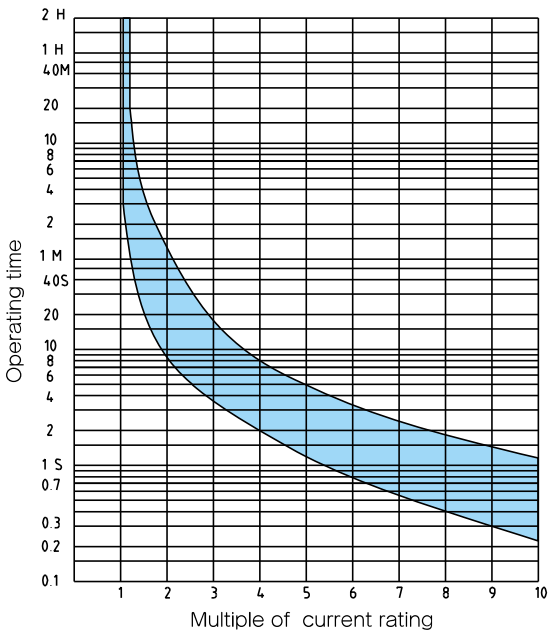

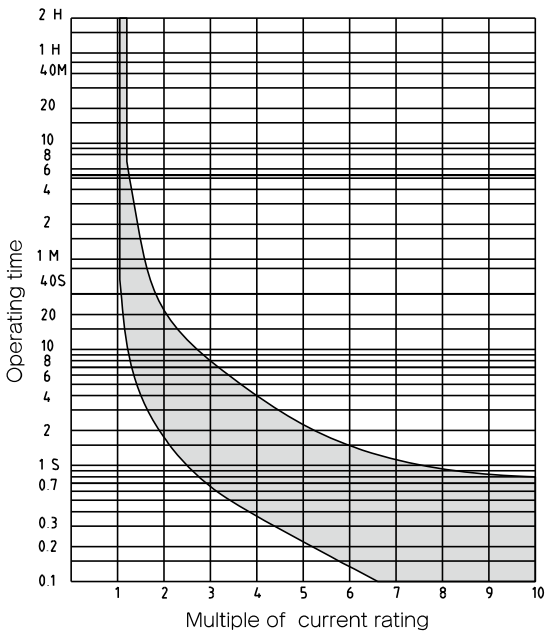

GTJ−18JA−F~125−F

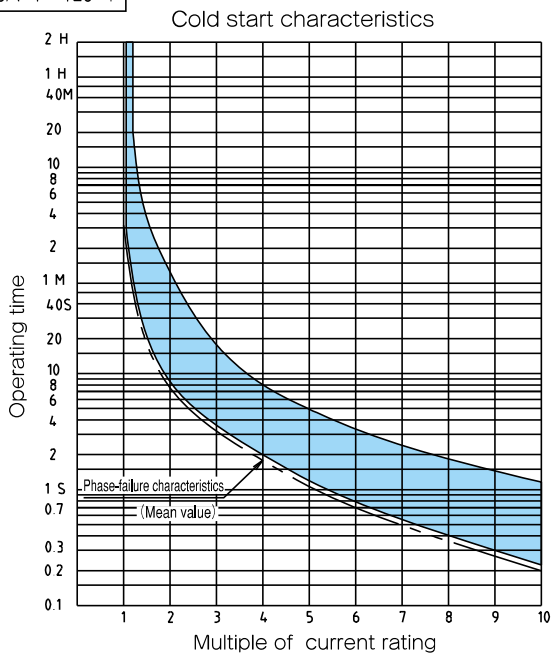

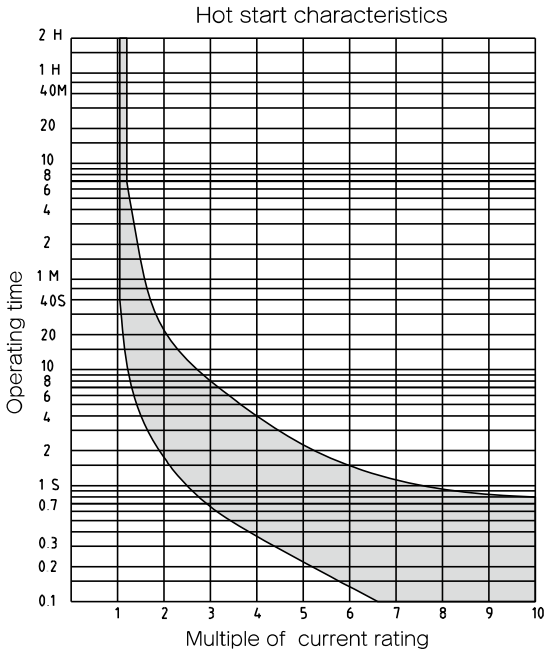

TJ−18JA	TJ−18JA−F
TJ−18	TJ−18−F
TJ−18JA−3	TJ−18JA−3F
TJ−18−3	TJ−18−3F
GTJ−18JA	GTJ−18JA−F
GTJ−18	GTJ−18−F

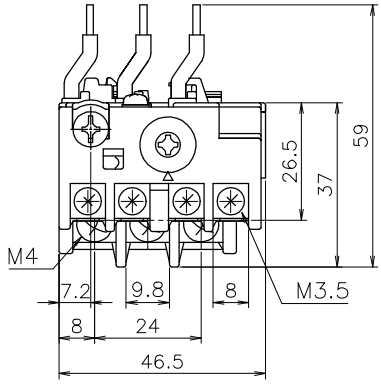

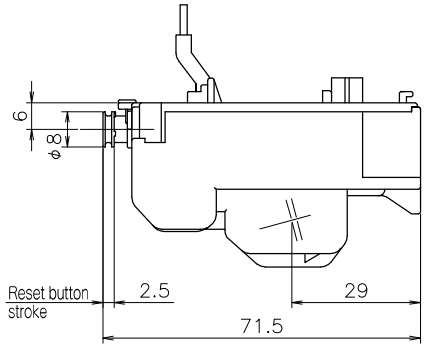

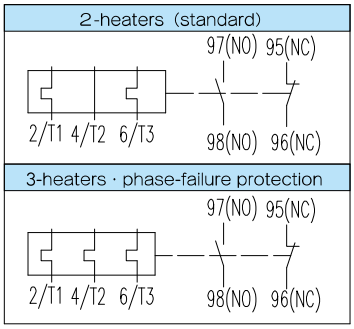

Weight 0.09kg

TJ−18N	TJ−18N−F
TJ−18N−3	TJ−18N−3F
GTJ−18N	GTJ−18N−F

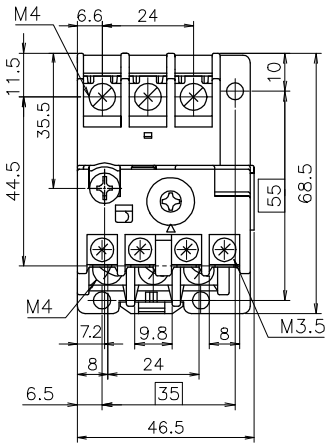

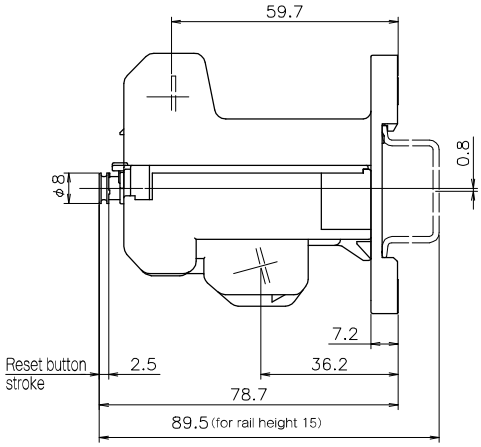

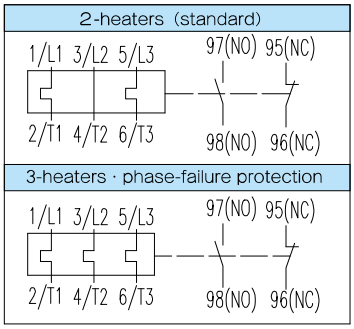

Weight 0.13kg

TJ−35	TJ−35−F
TJ−35−3	TJ−35−3F
GTJ−35	GTJ−35−F

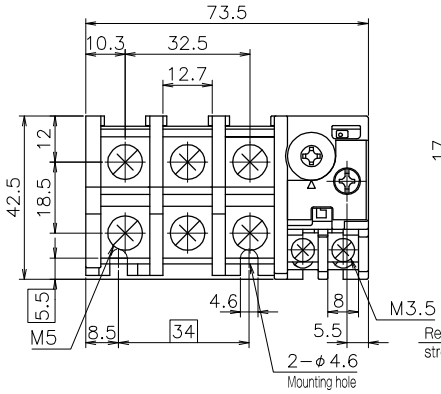

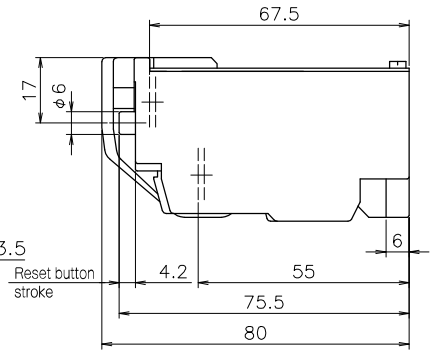

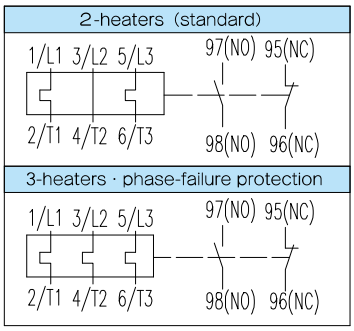

Weight 0.2kg

3

TJ−50 TJ−50−F
TJ−50−3 TJ−50−3F
GTJ−50 GTJ−50−F

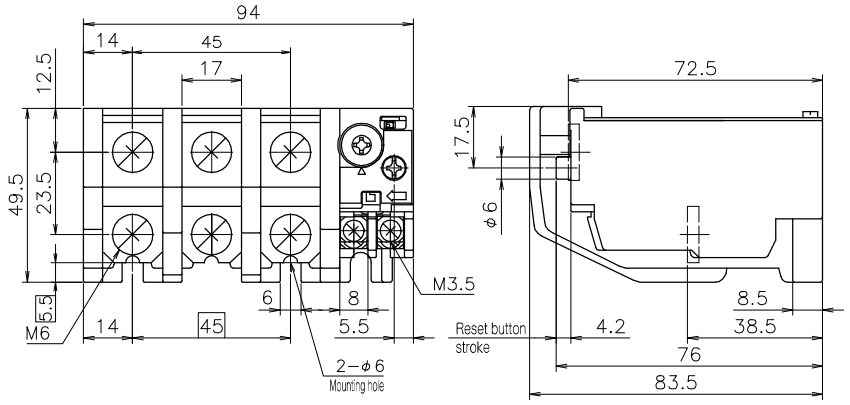

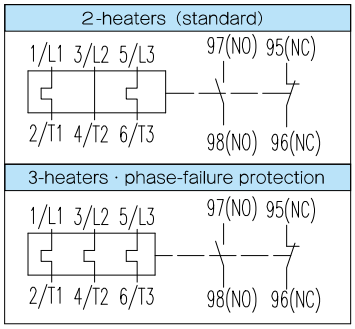

Weight 0.38kg

TJ−125 TJ−125−F
TJ−125−3 TJ−125−3F
GTJ−125 GTJ−125−F

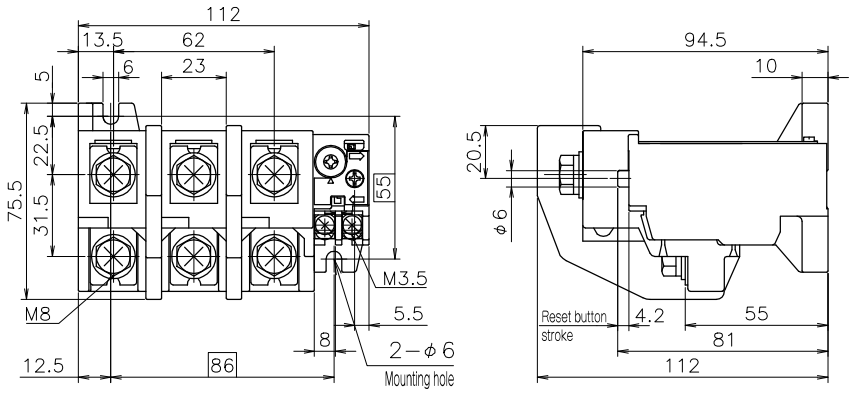

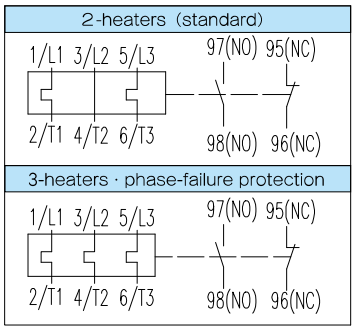

Weight 0.6kg

TJ−220
TJ−220−3
GTJ−220

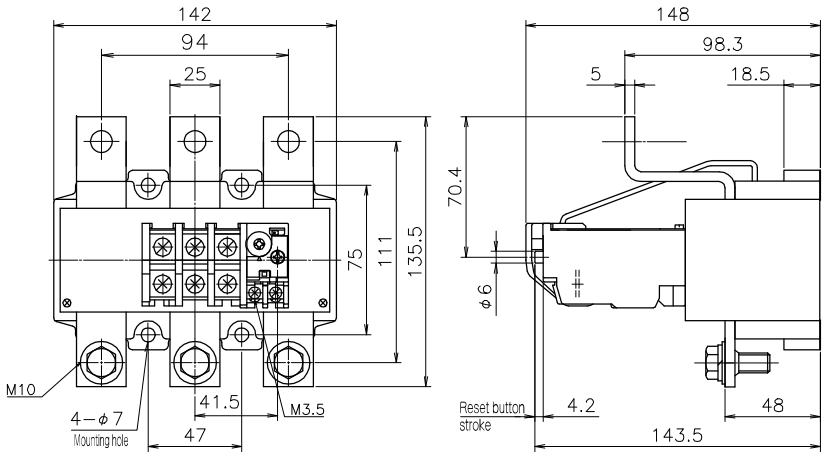

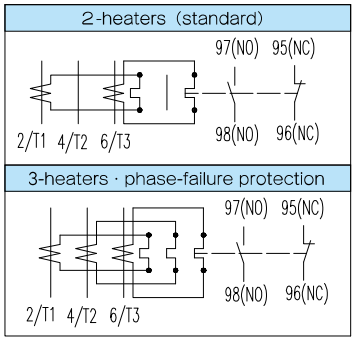

Weight 2.3kg

TJ−400N
TJ−400N−3
GTJ−400N

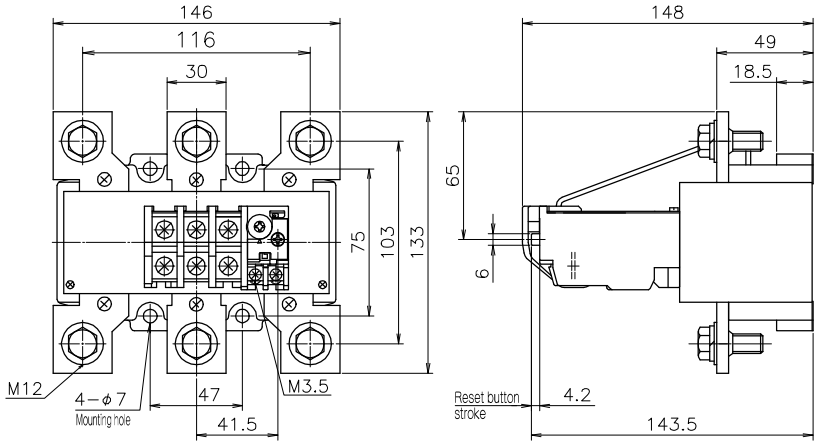

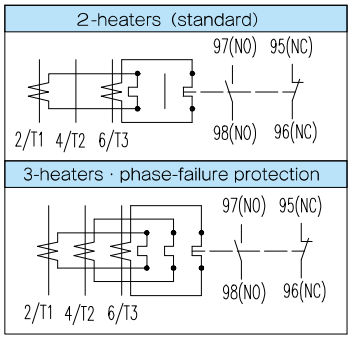

Weight 2.5kg

T−400
GT−400

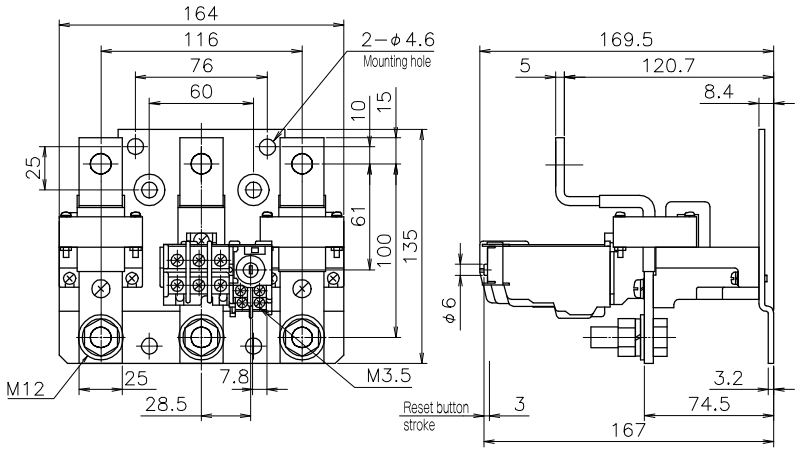

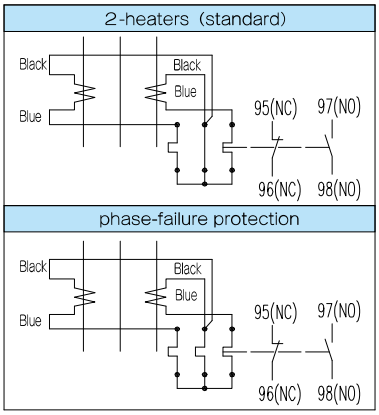

Weight 2.0kg

T−600
GT−600

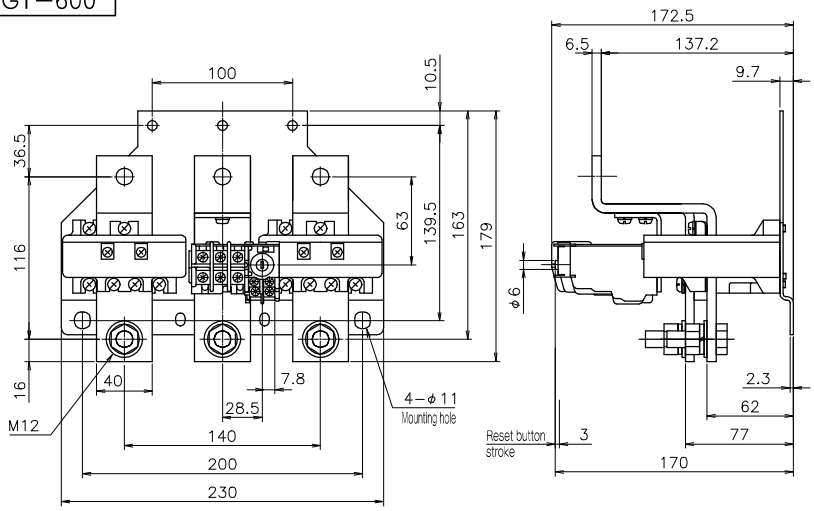

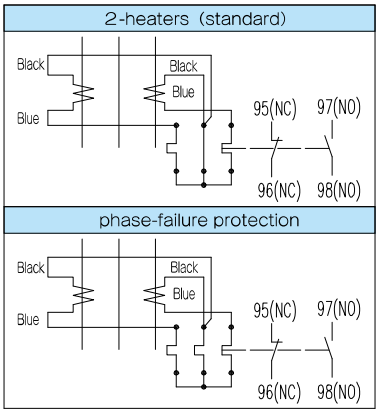

Weight 5.0kg

Ratings and specifications

Item \ Model			HAU-2	HAU-4	HAU-BL	HAU-BR
Used with			PAK-11J～95H		PAK-100H～270H	
Rated thermal current			10A			
Rated operational current	AC-15	AC100-110V	10A			
		AC200-220V	6A			
		AC380-440V	3A			
		AC500-550V	3A			
	DC-13	DC48V	2A			
		DC100-110V	1A			
		DC200-220V	0.25A			
Performance	Mechanical life		5 million operations.			
	Electrical life		1 million operations.			

Notes. ①Minimum operating voltage and current is 24V 10mA
②HAU-BL is mounted on left side of contactor, and HAU-BR on right side. Both must be mounted, respectivery, at the same time.

Auxiliary contacts can be added as needed.

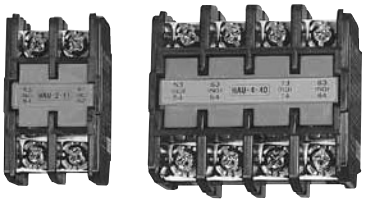

HAU-2 HAU-4

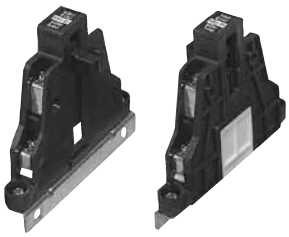

HAU-BL・BR

Dimensions

HAU-2（2P）

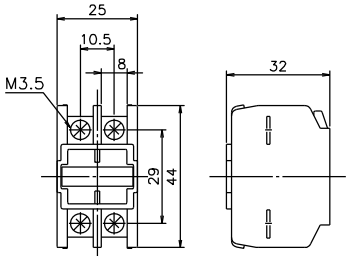

Weight 0.025kg

HAU-4（4P）

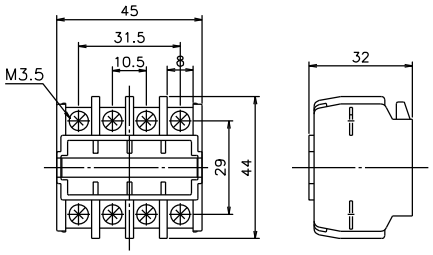

Weight 0.045kg

HAU-BL・HAU-BR

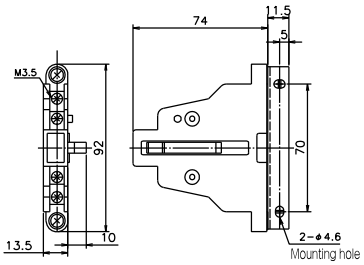

Weight 0.07kg

Contact configuration

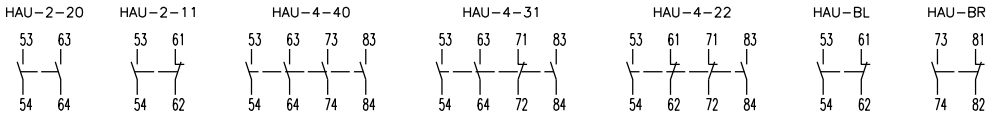

Unit mounting dimensions

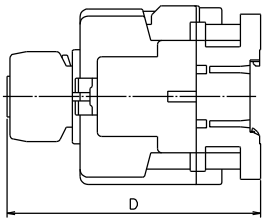

(in mm)

Model	PAK-11J	PAK-12J	PAK-20J	PAK-21J	PAK-26J	PAK-35J	PAK-50J	PAK-50H	PAK-65H	PAK-80H	PAK-95H
Dimension D	103.5		107		124.5			140.5			

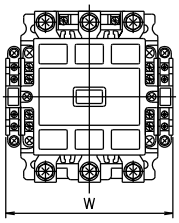

(in mm)

Model	PAK-100H	PAK-125H	PAK-150H	PAK-220H	PAK-270H
Dimensions W	131		152		

Note. HAU-BL and BR must be mounted on left and right, respectively, at the same time.

No-Loss latch units

Ratings and specifications

Item \ Model	HL-B
Used with	PAK-50～95H
Operating coil rating (TC coil) 5s rating	100-110V 50／60Hz 200-220V 50／60Hz

If PAK-J type is used as a mechanical-latching starter, Built-in type magnetic contactors PAK-JL type shall be provided.

Adding a no-loss latch unit makes it possible to use the contactor as a mechanical-latching type magnetic starter.

HL-B

Dimensions

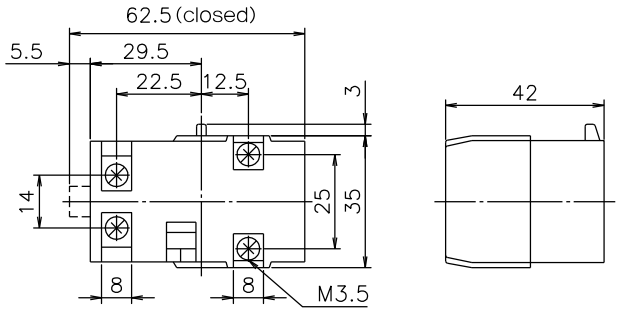

Weight 0.1kg

Unit mounting dimensions

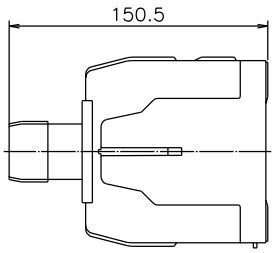

Connection diagram

The diagram shows the connection when the push button has been used. Please contact us for further infomation of automatic operation setting, Please use Togami's PBP-2M push button.

PAK-50H～95H

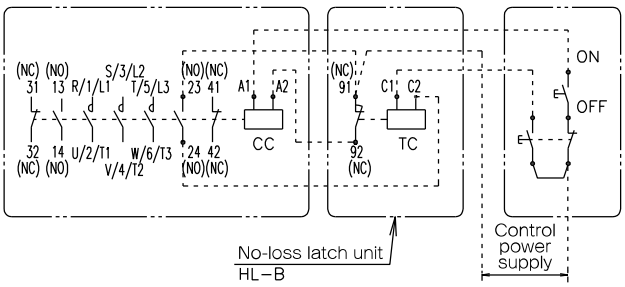

CC : Closing coil
TC : Tripping coil

PAK-50HTC～95HTC

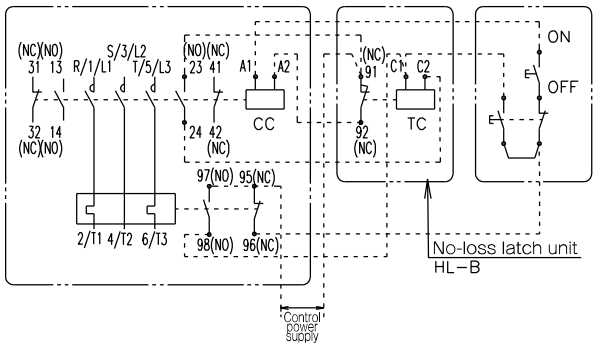

Prevents terminal exposure and enhances safety.
Therminal covers comforming to
DIN 57106/VDE 0106 Teil 100 standards for
protection against live parts.

PAK-6JTC with terminal covers.

4

Application

For		Type name	List of compornents	
			Protected area	Quantity
Magnetic contactor	PAK-6JC	C-21	Main, auxiliary and coil terminals	1
	PAK-11J PAK-12J	C-11	Main and auxiliary terminals	2(one each, power supply and load)
			Coil terminals	1
	PAK-20J	C-12	Main and auxiliary terminals	2(one each, power supply and load)
			Coil terminals	1
	PAK-21J	C-13	Main and auxiliary terminals	2(one each, power supply and load)
			Coil terminals	1
	PAK-26J PAK-35J PAK-50J	C-14	Main terminals	2(one each, power supply and load)
			Auxiliary terminals	2(one each, left and right)
			Coil terminals	1
Magnetic starter	PAK-6JTC PAK-6JGTC PAK-6JT-3C	C-21	Main, auxiliary and coil terminals	1
		TC-22	Main terminals	1
			Auxiliary terminals	1
	PAK-11,12JTC PAK-11,12JGTC PAK-11,12JT-3C	C-11	Main and auxiliary terminals	2(one each, power supply and load)
			Coil terminals	1
		TC-22	Main terminals	1
			Auxiliary terminals	1
	PAK-20JTC PAK-20JGTC PAK-20JT-3C	C-12	Main and auxiliary terminals	2(one each, power supply and load)
			Coil terminals	1
		TC-22	Main terminals	1
			Auxiliary terminals	1
	PAK-21JTC PAK-21JGTC PAK-21JT-3C	C-13	Main and auxiliary terminals	2(one each, power supply and load)
			Coil terminals	1
		TC-22	Main terminals	1
			Auxiliary terminals	1
	PAK-26,35,50JT(C) PAK-26,35,50JGT(C) PAK-26,35,50JT-3(C)	C-14	Main terminals	2(one each, power supply and load)
			Auxiliary terminals	2(one each, left and right)
			Coil terminals	1
		TC-25	Main terminals	1
			Auxiliary terminals	2

Notes. ①For magnetic starter, please order both the cover for magnetic contactor (C-type) and the cover for thermal overload relay(TC-type).
②Terminal cover is packed in each model type.

For		Type name	List of compornents	
			Protected area	Quantity
Reversing magnetic contactor	RSK-11J	C-10R	Main and auxiliary terminals	4(M1,M2 one each, power supply and load)
			Coil terminals	2(M1,M2 one each)
	RSK-12J	C-11R	Main and auxiliary terminals	4(M1,M2 one each, power supply and load)
			Coil terminals	2(M1,M2 one each)
			Mechanical interlock	1
	RSK-20J	C-12R	Main and auxiliary terminals	4(M1,M2 one each, power supply and load)
			Coil terminals	2(M1,M2 one each)
			Mechanical interlock	1
	RSK-21J	C-13R	Main and auxiliary terminals	4(M1,M2 one each, power supply and load)
			Coil terminals	2(M1,M2 one each)
			Mechanical interlock	1
	RSK-26J RSK-35J RSK-50J	C-14R	Main terminals	4(M1,M2 one each, power supply and load)
			Auxiliary terminals	4(M1,M2 one each, left and right)
			Coil terminals	2(M1,M2 one each)
			Mechanical interlock	1
Reversing magnetic starter	RSK-11JTC RSK-11JGTC RSK-11JT-3C	C-10R	Main and auxiliary terminals	4(M1,M2 one each, power supply and load)
			Coil terminals	2(M1,M2 one each)
		TC-22	Main terminals	1
			Auxiliary terminals	1
	RSK-12JTC RSK-12JGTC RSK-12JT-3C	C-11R	Main and auxiliary terminals	4(M1,M2 one each, power supply and load)
			Coil terminals	2(M1,M2 one each)
			Mechanical interlock	1
		TC-22	Main terminals	1
			Auxiliary terminals	1
	RSK-20JTC RSK-20JGTC RSK-20JT-3C	C-12R	Main and auxiliary terminals	4(M1,M2 one each, power supply and load)
			Coil terminals	2(M1,M2 one each)
			Mechanical interlock	1
		TC-22	Main terminals	1
			Auxiliary terminals	1
	RSK-21JTC RSK-21JGTC RSK-21JT-3C	C-13R	Main and auxiliary terminals	4(M1,M2 one each, power supply and load)
			Coil terminals	2(M1,M2 one each)
			Mechanical interlock	1
		TC-22	Main terminals	1
			Auxiliary terminals	1
	RSK-26,35,50JT(C) RSK-26,35,50JGT(C) RSK-26,35,50JT-3(C)	C-14R	Main terminals	4(M1,M2 one each, power supply and load)
			Auxiliary terminals	4(M1,M2 one each, left and right)
			Coil terminals	2(M1,M2 one each)
			Mechanical interlock	1
		TC-25	Main terminals	1
			Auxiliary terminals	2
Auxiliary contact unit	HAU-2	C-31	Terminals	1
	HAU-4	C-32	Terminals	1

Notes. ①For magnetic starter, please order both the cover for magnetic contactor (C-type) and the cover for thermal overload velay(TC-type).
②Terminal cover is packed in each model type.

For		Type name	List of compornents	
			Protected area	Quantity
Magnetic relay	PAK-8JS (4P)	C-11	Auxiliary terminals	2(one each, power supply and load)
			Coil terminals	1
	PAK-8JS (6P)	C-11	Main unit auxiliary terminals	2(one each, power supply and load)
			Main unit coil terminals	1
		C-31	HAU terminals	1
	PAK-8JS (8P)	C-11	Main unit auxiliary terminals	2(one each, power supply and load)
			Main unit coil terminals	1
		C-32	HAU terminals	1
Thermal overload relay	TJ-18JA TJ-18 GTJ-18JA GTJ-18 TJ-18JA-3 TJ-18-3	TC-22	Main terminal	1
			Auxiliary terminals	1
	TJ-18N GTJ-18N TJ-18N-3	TC-22N	Main terminal (Power supply side)	1
			〃 (Load side)	1
			Auxiliary terminals	1
	TJ-35 GTJ-35 GTJ-35-3	TC-25	Main terminal	1
			Auxiliary terminals	1

Notes. ①For magnetic starters, please order both the cover for magnetic contactor and the cover for thermal overload relay.
②For 6P and 8P magnetic relays, please order both magnetic relay and auxiliary contact unit HAU.
③Terminal cover is packed in each model.

The safety of the maintenance inspection is improved.

Color： Transparent

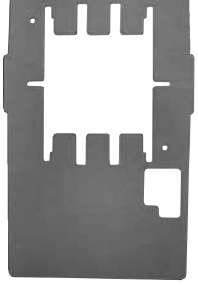

Application and dimensions

Non-reversing magnetic contactor（C-4 to -9）

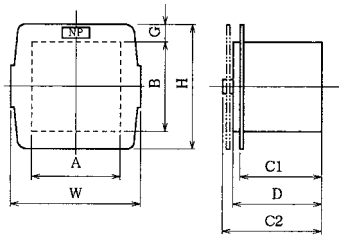

Non-reversing magnetic starter（TC-4 to -9）

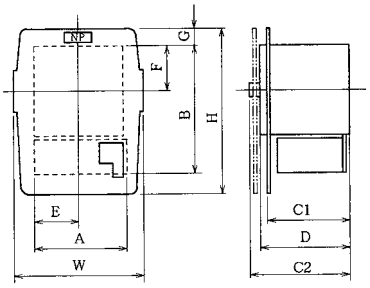

Reversing magnetic contactor（C-4R to -8R）

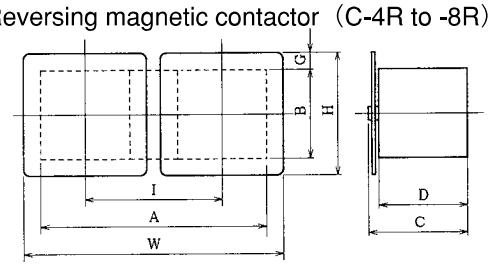

Reversing magnetic starter（TC-4R to -8R）

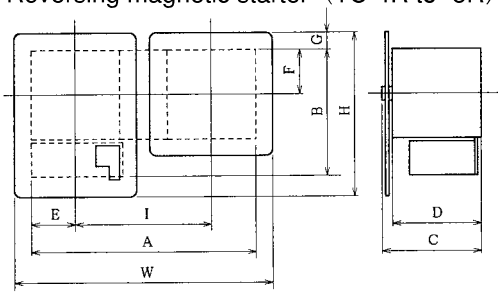

Model			Used with	Dimensions（mm）										
				Terminal cover		Reference dimensions								
				W	H	D	A	B	C1	C2	E	F	G	I
Magnetic contactor	Non reversing	C-4	PAK-50～95H	130	160	113.5	100	110	100	—	—	—	25	—
		C-5	PAK-100～125H	130	200	140	104	150	—	148	—	—	20	—
		C-6	PAK-150H	155	250	156.5	125	156	—	166	—	—	47	—
			PAK-220H					177					36.5	
		C-8	PAK-300～400J	171	330	200	187	240	—	205	81.5	120	45	—
		C-9	PAK-600J	310	460	232	284	316	—	235	130	158	72	—
			PAK-800J					380				190	40	
	Reversing	C-4R	RSK-50～95H	222	150	129	224	147	—	135	—	—	1.5	112
		C-5R	RSK-100～125H	261	200	150	270	160	—	158	—	—	15	131
		C-6R	RSK-150H	311	250	166.5	305	156	—	176	—	—	47	156
			RSK-220H					177					36.5	
		C-8R	RSK-300～400J	359	330	219	385	300	—	224	91	150	45	188
Magnetic starter	Non reversing	TC-4	PAK-50～95HT(C)	130	210	113.5	107.5	160	100	—	50	55	25	—
		TC-5A	PAK-100～125HTC	130	270	140	112	225.5	—	148	52	80	20	—
		TC-6A	PAK-150HTC	155	320	156.5	125	231.5	—	166	62.5	78	47	—
		TC-7A	PAK-220HTC		360	157	142	287.5	—		71	88.5	36.5	—
		TC-8	PAK-300～400JT	171	430	200	187	330	—	205	81.5	120	45	—
		TC-9	PAK-600JT	310	580	232	284	432	—	235	130	158	72	—
	Reversing	TC-4R	RSK-50～95HT(C)	222	205	129	224	188.5	—	135	50	83.5	—	112
		TC-5RA	RSK-100～125HTC	261	270	150	270	232.5	—	158	52	85	15	131
		TC-6RA	RSK-150HTC	311	320	166.5	305	250	—	176	62.5	97	28	156
		TC-7RA	RSK-220HTC		360	167		308			71	109	16	
		TC-8R	RSK-300～400JT	171	580	219	385	360	—	224	91	150	45	188

Feature

Surge voltage generated from a coil is suppressed for electronic circuit protection.

Easily attachable by fitting together with the coil terminal.

Since this unit utilize the space below coil, increasement of fitting space is small.
(PAK-8JS, PAK-11J, 12J, 20J, 21J, RSK-11J, 12J, 20J, 21J)

Resin cover for, high insulation and reliability.

Rating and specification

Model	Rated voltage	Specification		Supressed surge voltage
		Surge absorption element	Constant	
SA-22	AC/DC 100-250V	CR	C=0.22 μF R=120Ω	700V
SA-32				
SA-24	AC 380-440V	Varistor	Varistor voltage 910V	910V
SA-34				

※Supressed surge voltage shows the maximum value, but not the guaranted value.

Application

Model	Rated voltage (Application coil voltage)	Model
SA-22	AC/DC 100-250V	PAK-8JS, PAK-11J, 12J, 20J, 21J
SA-24	AC 380-440V	RSK-11J, 12J, 20J, 21J
SA-32	AC/DC 100-250V	PAK-26J, 35J, 50J
SA-34	AC 380-440V	RSK-26J, 35J, 50J

※PAK-50H～800H and RSK-50H～400H are built-in standard model.

Mounting method

◇SA-22,24

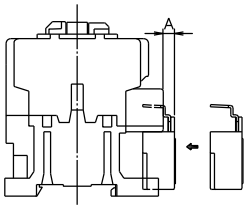

◇SA-32,34

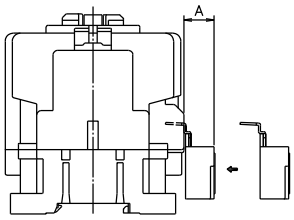

※Dimension of power supply side A, after mounted to the magnetic contactor.(Reference value)

(mm)

SA-22,24	SA-32,34
5	19

Dimensions

SA-22,24

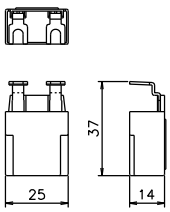

Weight 0.015kg

SA-32,34

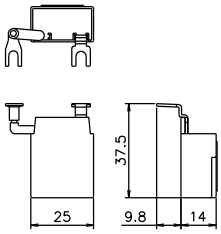

Weight 0.015kg

Din rail mounting adapters

Feature

Time required for assembling the boards is reduced remarkably by using DIN Rail Adapter.
One-toutch mounting to 35mm-width DIN Rail.

Material：Steel plate

Application

PAK-50H, 65H, 80H, 95H	Steel plate	D-5A

Mounting and removal

Push slightly to the arrow direction until you can hear a click

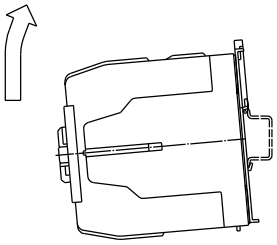

Insert driver tip into adapter's hole and wrench open slightly as illustrated.

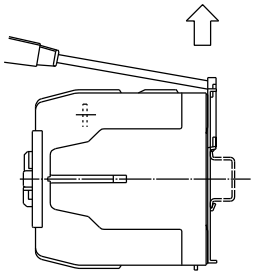

Dimensions

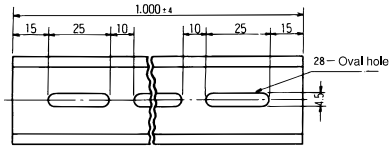

Note:The PFP-100N2 rails have six oval holes from each end, measuring $\phi 4.5 \times 25$mm.

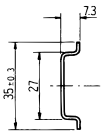

PFP-100
Material: Steel

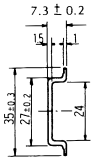

PFP-100N
Material: Aluminum

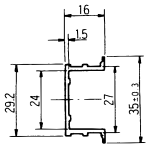

PFP-100N2
Material: Aluminum

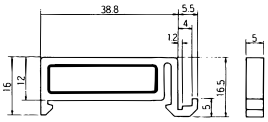

PFP-S(spacer)
Material: Resin

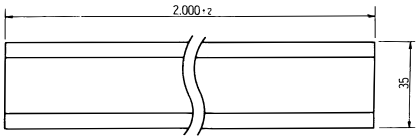

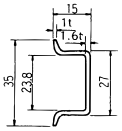

AMI-DE200
Material: Steel

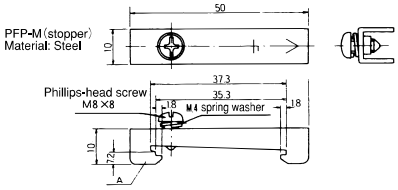

PFP-M(stopper)
Material: Steel

SPARE COIL

Coil for replacement.

Used with	Name
PAK-8JS, 11J～800J	SPARE COIL

MAIN CONTACT SPRING

For replacement from exhausted contacts.

Used with	Name
PAK-11J～800J	MAIN CONTACT SPRING

BASE FOR TJ-18N

Individual use adaper form thermal overload relay (TJ-18N)

Used with	Name
TJ-18, TJ-18-3, GTJ-18	BASE FOR TJ-18N

MECHANICAL INTERLOCK UNIT SET

For mechanical interlock.
2 blocks.

Used with	Name	Used with	Name
RSK-12J	ML-E-R12J	RSK-65H	ML-C-R65H
RSK-20J	ML-E-R20J	RSK-80H	ML-C-R80H
RSK-21J	ML-E-R21J	RSK-95H	ML-C-R95H
RSK-26J	ML-E-R26J	RSK-100H	ML-C-R100H
RSK-35J	ML-E-R35J	RSK-125H	ML-C-R125H
RSK-50J	ML-E-R50J	RSK-150H	ML-C-R150H
RSK-50H	ML-C-R50H	RSK-220H	ML-C-R220H

↑12J～15J=INTERLOCK+CONNECTING BASE
50H～95H=INTERLOCK+BASE PLATE
100H～220H=INTERLOCK+BASE PLATE+PEDESTAL

CONNECTING BAR KIT

For reversing contactors.

Used with	Name
RSK-12J (TC)	CONNECTING BAR KIT for RSK-12J (TC)
RSK-20J (TC)	CONNECTING BAR KIT for RSK-20J (TC)
RSK-21J (TC)	CONNECTING BAR KIT for RSK-21J (TC)
RSK-26J (TC), 35J (TC), 50J (T)	CONNECTING BAR KIT for RSK-26J (TC), 35J (TC), 50J (T)
RSK-50H (TC)	CONNECTING BAR KIT for RSK-50H (TC)
RSK-65H (TC), 80H (TC), 95H (T)	CONNECTING BAR KIT for RSK-65H (TC), 80H (TC), 95H (T)
RSK-100H (TC), 125H (TC)	CONNECTING BAR KIT for RSK-100H (TC), 125H (TC)
RSK-150H (TC)	CONNECTING BAR KIT for RSK-150H (TC)
RSK-220H (TC)	CONNECTING BAR KIT for RSK-220H (TC)

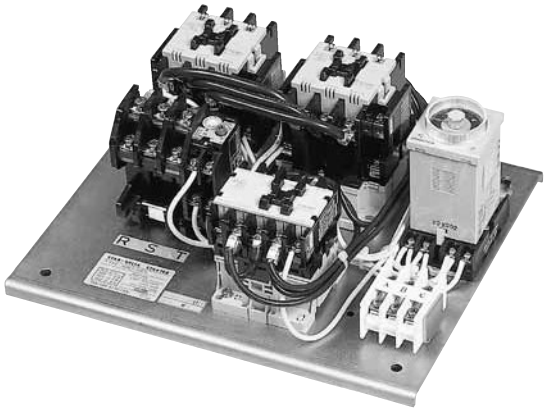

Model explanation

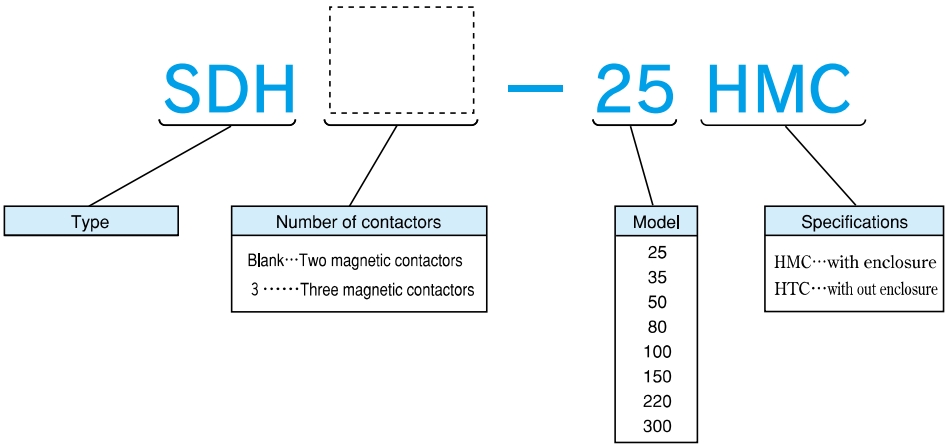

Starting current characteristics

In star-delta starters, the contactor recloses at the changeover from star operation to delta operation. At this time, a large transient current greater than the direct-online starting current of motor flows for a moment for 2-contactor type and 3-contactor type.

	SDH	SDH3
Magnetic contactor operation chart	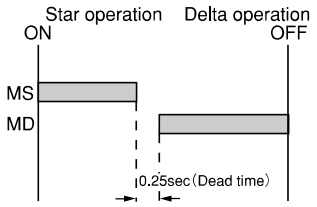	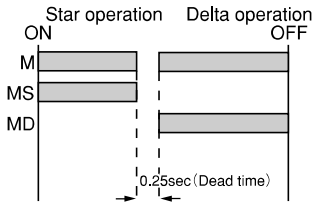
Starting current	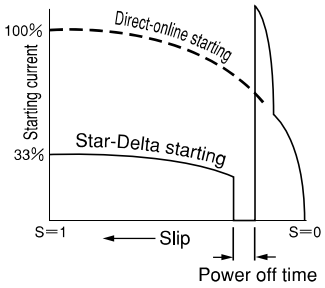	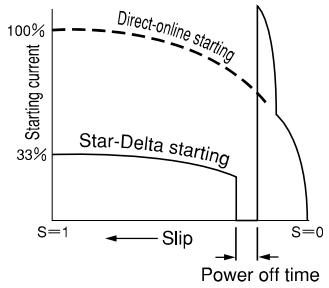
Starting torque	Starting torque is reduced to approximately 1/3 of the values for direct-online starting.	

Handling precautions

1. Always turn off the power before adjusting the timer, or erroneous operation may result.
2. Setting the change-over time of timer
   The change-over time can be adjusted with the knob on the front of the timer, between 5 and 60s to match motor starting time. The standard time in which the maximum starting current flows continuously is within 15s.
3. For 2-contactor type starters, the power to the motor remains on even when the motor is not operating. Depending on the operating environment, this may cause motor burnout or electrical shock. For this reason, the use of 3-contactor starters is recommended.
4. The number of operating cycles is three times/hour. If the successively starting is necessary in such as a test operation, it must be within 3 times. After this operations, leave at least one hour.

Ratings and specifications

＊SDH

Model		Rated capacity（kW）		Contactor used		Thermal overload relay	Timer used
Enclosed type	Open type	200—220V	380—440V	M D	M S	O C R	T M
SDH— 25HMC	SDH— 25HTC	5.5	5.5	PAK— 21J	PAK— 12J31	TJ—35	H3CR—G8EL
SDH— 35HMC	SDH— 35HTC	7.5	11	PAK— 26J	PAK— 21J	〃	〃
SDH— 50HMC	SDH— 50HTC	11	19	PAK— 35J	PAK— 26J	〃	〃
SDH— 80HMC	SDH— 80HTC	19	26	PAK— 50H	PAK— 35J	TJ—50	〃
SDH—100HMC	SDH—100HTC	26	37	PAK— 65H	PAK— 50H	〃	〃
SDH—150HMC	SDH—150HTC	40	55	PAK—100H	PAK— 65H	TJ—125	〃
SDH—220HMC	SDH—220HTC	55	90	PAK—150H	PAK—100H	〃	〃
SDH—300HMC	SDH—300HTC	75	150	PAK—220H	PAK—125H	TJ—35C+CT	〃

Notes. ①Refer to P14 for the contrast table of the motor capacity and the rated current of thermal overload relay.

＊SDH3（with power cut-off contactor）

Model		Rated capacity（kW）		Contactor used			Thermal overload relay	Timer used
Enclosed type	Open type	200—220V	380—440V	M	M D	M S	O C R	T M
SDH3— 25HMC	SDH3— 25HTC	5.5	5.5	PAK— 21J		PAK— 21J	TJ—35	H3CR—G8EL
SDH3— 35HMC	SDH3— 35HTC	7.5	11	PAK— 26J	PAK— 21J	〃	〃	〃
SDH3— 50HMC	SDH3— 50HTC	11	19	PAK— 35J		〃	〃	〃
SDH3— 80HMC	SDH3— 80HTC	19	26	PAK— 50H		PAK— 26J	TJ—50	〃
SDH3—100HMC	SDH3—100HTC	26	37	PAK— 65H		PAK— 35J	〃	〃
SDH3—150HMC	SDH3—150HTC	40	55	PAK—100H		PAK— 50H	TJ—125	〃
SDH3—220HMC	SDH3—220HTC	55	90	PAK—150H		PAK— 65H	〃	〃
SDH3—300HMC	SDH3—300HTC	75	150	PAK—220H		PAK—100H	TJ—35C+CT	〃

Notes. ①Refer to P14 for the contrast table of the motor capacity and the rated current of thermal overload relay.

Operation coil rating

Nominal coil voltage	Rated coil voltage
AC100V	100V 50Hz 100-110V 60Hz
AC200V	200V 50Hz 200-220V 60Hz

Notes. ①Nominal coil voltage is designed to simplify specification in ordering.
Please use nominal coil voltage when ordering.
②Please contact us for 400V coil.

Standard service conditions

Standard ambient temperature	40℃
Ambient temperature range	5℃～40℃
Relative humidity	45%～85%RH
Environment	No corrosive or explosive gas, no excessive vibration or shock
Mounting position	Mounted vertically
Altitude	2000m max

Capacity of the operation transformer

(Capacity must be greater than the values listed below.)

Type \ Model	SDH—	SDH3—
25	50VA	50VA
35	50VA	100VA
50	50VA	100VA
80	100VA	150VA
100	100VA	200VA
150	200VA	400VA
220	300VA	500VA
300	300VA	500VA

2-contactor type star-delta starter SDH-□

Dimensions and mounting method

①Enclosed type SDH-□HMC (in mm, Weight kg)

Model	W	H	D	A	B	C	E	F	F'	G	G'	I	J	K	L	Weight
SDH— 25HMC	300	300	150	220	240	14	40	45	45	55	55	100	28	28	7	8.5
SDH— 35HMC	〃	〃	〃	〃	〃	〃	〃	〃	〃	〃	〃	〃	〃	〃	〃	8.8
SDH— 50HMC	〃	〃	〃	〃	〃	〃	〃	〃	〃	〃	〃	〃	〃	35	〃	9.1
SDH— 80HMC	350	350	165	250	270	〃	45	〃	〃	70	70	120	〃	43	〃	10.3
SDH—100HMC	〃	〃	〃	〃	〃	〃	〃	〃	〃	〃	〃	〃	〃	〃	〃	11.0
SDH—150HMC	300	560	220	200	460	〃	60	20	60	80	60	90	〃	52	9.5	15.0
SDH—220HMC	457	640	226	350	540	15	104	35	80	115	90	150	〃	78	〃	22.6
SDH—300HMC	〃	〃	〃	〃	〃	〃	〃	〃	〃	〃	〃	〃	〃	〃	〃	26.5

②Open type SDH-□HTC (in mm, Weight kg)

Model	W	H	D	A	B	C	E	Weight
SDH— 25HTC	240	200	110	200	160	10	7	2.8
SDH— 35HTC	〃	〃	〃	〃	〃	〃	〃	3.1
SDH— 50HTC	〃	〃	〃	〃	〃	〃	〃	3.4
SDH— 80HTC	280	235	124	240	195	〃	〃	4.6
SDH—100HTC	〃	〃	〃	〃	〃	〃	〃	5.3
SDH—150HTC	240	360	150	200	320	〃	9.5	8.0
SDH—220HTC	350	400	172	310	360	15	〃	12.6
SDH—300HTC	〃	〃	〃	〃	〃	〃	〃	16.5

①Enclosed type

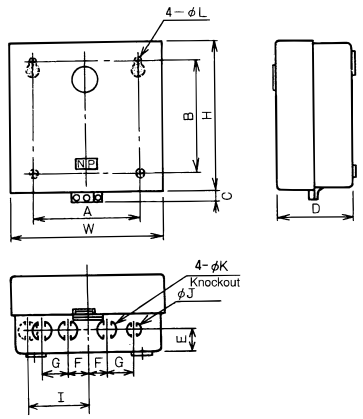

②Open type

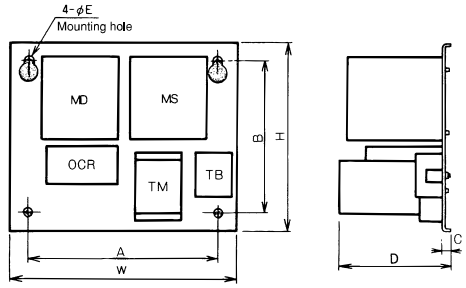

Connection diagram

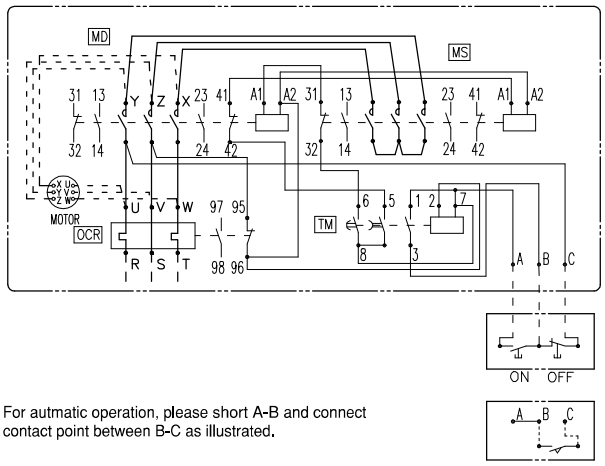

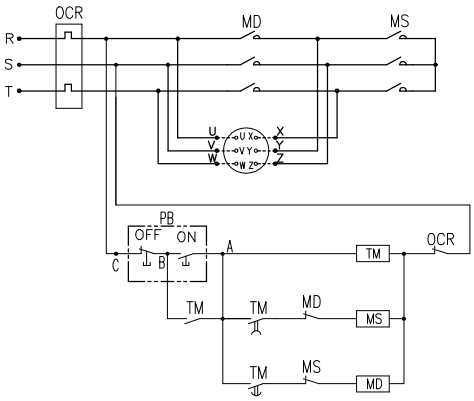

For autmatic operation, please short A-B and connect contact point between B-C as illustrated.

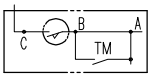

Notes. ①For 25HM and HT models, auxiliary contacts 23-24 and 41-42 of MD contactor and 13-14, 23-24 and 41-42 of MS contactor are not provided with.
②For 35HM and HT models, auxiliary contacts 23-24 and 41-42 of MS contactor are not provided with.

3-contactor type star-delta starter SDH3-□

Dimensions and mounting method

①Enclosed type SDH3-□HMC

(in mm, Weight kg)

Model	W	H	D	A	B	C	E	F	G	I	J	K	L	Weight
SDH3— 25HMC	300	300	150	220	240	14	40	45	55	100	28	28	7	9.1
SDH3— 35HMC	350	350	165	250	270	〃	45	〃	70	120	〃	〃	〃	9.9
SDH3— 50HMC	〃	〃	〃	〃	〃	〃	〃	〃	〃	〃	〃	35	〃	10.1
SDH3— 80HMC	400	400	180	300	320	〃	50	50	80	〃	〃	43	〃	16.1
SDH3—100HMC	〃	〃	〃	〃	〃	〃	〃	〃	〃	〃	〃	〃	〃	16.4
SDH3—150HMC	480	480	200	360	380	〃	55	55	100	150	〃	52	9.5	22.0
SDH3—220HMC	560	560	220	440	460	〃	60	70	120	190	〃	78	〃	27.1
SDH3—300HMC	〃	〃	〃	〃	〃	〃	〃	〃	〃	〃	〃	〃	〃	36.2

②Open type SDH3-□HTC

(in mm, Weight kg)

Model	W	H	D	A	B	C	E	Weight
SDH3— 25HTC	240	200	110	200	160	10	7	3.4
SDH3— 35HTC	280	235	〃	240	195	〃	〃	4.2
SDH3— 50HTC	〃	〃	〃	〃	〃	〃	〃	4.4
SDH3— 80HTC	320	280	124	280	240	〃	〃	6.7
SDH3—100HTC	〃	〃	〃	〃	〃	〃	〃	7.0
SDH3—150HTC	360	320	150	310	270	〃	9.5	12.0
SDH3—220HTC	450	410	172	400	360	15	〃	17.0
SDH3—300HTC	〃	〃	〃	〃	〃	〃	〃	26.1

①Enclosed type

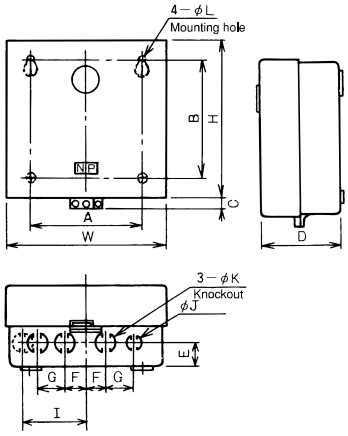

②Open type

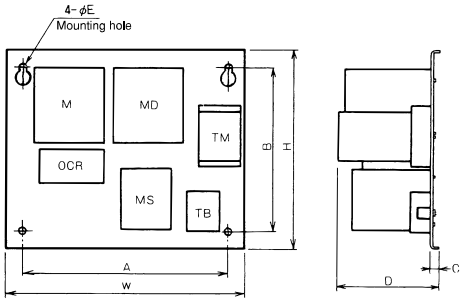

Connection diagram

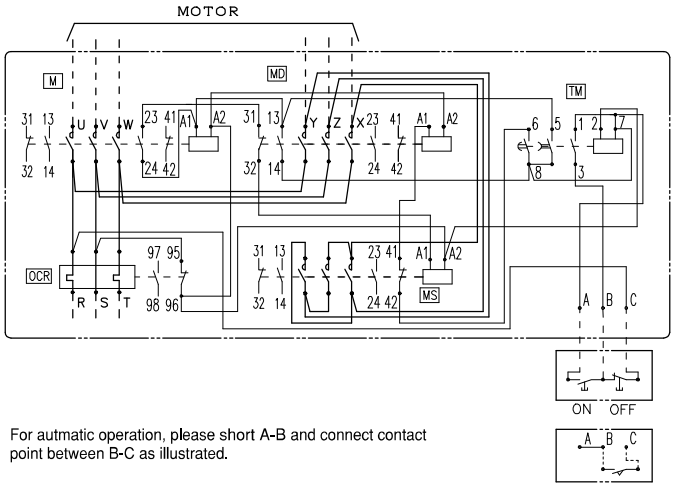

For autmatic operation, please short A-B and connect contact point between B-C as illustrated.

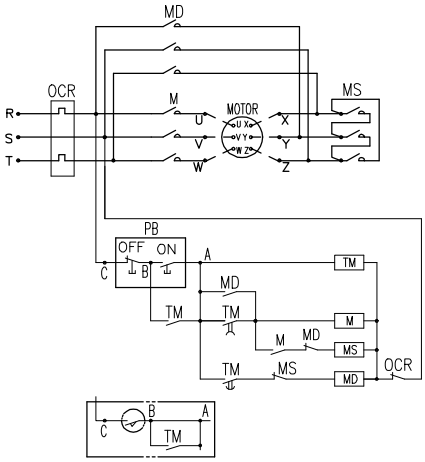

Notes. ①For 25HM and HT models, auxiliary contacts 23-24 and 41-42 are not provided with.
②For 35HM and HT models, auxiliary contacts 23-24 and 41-42 of MD and MS contactors are not provided with.
③For 50HM and HT models, auxiliary contacts 23-24 and 41-42 of MS contactor are not provided with.

Conforming wire size and terminal tightening torque

Power supply side terminals（R.S.T）Load side terminals（U.V.W, Y.Z.X）of SDH

Model		Screw size		Conforming wire		Applicable crimp-type terminal		Tightening torque N·m(kgf·cm)	
		Main circuit	Control circuit	Main circuit	Control circuit	Main circuit	Control circuit	Main circuit	Control circuit
SDH− 25	Power supply Load(UVW)	M5	M4	φ1.6～3.2 1.25～14㎟	φ1～2 0.5～3.5㎟	1.25−5～14−5	1.25−4 ～ 2−4	2.4～3.5（24～36）	1.2～1.8（12～18）
	Load(YZX)	M4		φ1～2 0.5～5.5㎟		1.25−4～5.5−4		1.2～1.8（12～18）	
SDH− 35	Power supply Load	M5		φ1.6～3.2 1.25～14㎟		1.25−5～14−5		2.4～3.5（24～36）	
SDH− 50	Power supply Load	M5		φ1.6～3.2 1.25～14㎟		1.25−5～14−5		2.4～3.5（24～36）	
SDH− 80	Power supply Load	M6		2～38㎟		2−6～38−6S ①		3.9～5.9（40～60）	
SDH−100	Power supply Load	M6		2～38㎟		2−6～38−6S ①		3.9～5.9（40～60）	
SDH−150	Power supply Load	M8		2～80㎟		2−8～CB80−8 ②		9.0～13.5（92～138）	
SDH−220	Power supply	M10		2～150㎟		2−10～150−10		18.1～27（185～275）	
	Load	M8		2～100㎟		2−8～CB100−8 ②		9.0～13.5（92～138）	
SDH−300	Power supply Load	M10		2～150㎟		2−10～150−10		18.1～27（185～275）	

5

Power supply side terminals（R.S.T）Load side terminals（U.V.W, Y.Z.X）of SDH3

Model		Screw size		Conforming wire		Applicable crimp-type terminal		Tightening torque N·m(kgf·cm)	
		Main circuit	Control circuit	Main circuit	Control circuit	Main circuit	Control circuit	Main circuit	Control circuit
SDH3− 25	Power supply	M5	M4	φ1.6～3.2 1.25～14㎟	φ1～2 0.5～3.5㎟	1.25−5～14−5	1.25−4 ～ 2−4	2.4～3.5（24～36）	1.2～1.8（12～18）
	Load	M4		φ1～2 0.5～5.5㎟		1.25−4～5.5−4		1.2～1.8（12～18）	
SDH3− 35	Power supply Load(UVW)	M5		φ1.6～3.2 1.25～14㎟		1.25−5～14−5		2.4～3.5（24～36）	
	Load(YZX)	M4		φ1～2 0.5～5.5㎟		1.25−4～5.5−4		1.2～1.8（12～18）	
SDH3− 50	Power supply Load	M5		φ1.6～3.2 1.25～14㎟		1.25−5～14−5		2.4～3.5（24～36）	
SDH3− 80	Power supply Load	M6		2～38㎟		2−6～38−6S ①		3.9～5.9（40～60）	
SDH3−100	Power supply Load	M6		2～38㎟		2−6～38−6S ①		3.9～5.9（40～60）	
SDH3−150	Power supply Load	M8		2～80㎟		2−8～CB80−8 ②		9.0～13.5（92～138）	
SDH3−220	Power supply	M10		2～150㎟		2−10～150−10		18.1～27（185～275）	
	Load	M8		2～100㎟		2−8～CB100−8 ②		9.0～13.5（92～138）	
SDH3−300	Power supply Load	M10		2～150㎟		2−10～150−10		18.1～27（185～275）	

① : Standard 38-6 crimp-type terminal lug is too wide, and not suitable for the terminal. Please use 38-6S (Nichifu Terminal Industries Co., Ltd.) or 38-S6 (Japan Solderless Terminal Mfg. Co., Ltd.).

② : Standard 80-8, 100-8 and crimp-type terminal lugs are too wide, and not suitable for the terminal. Please use CB-type terminal connectors for low-voltage switching devices (Nichifu Terminal Industries Co., Ltd.) or for molded case circuit breakers (Japan Solderless Terminal Mfg. Co., Ltd.)

MEMO

Series			J Serise												
Model type	Magnetic contactor		CLK-25JF2	CLK-15JFC	CLK-25J2	CLK-15JC	CLK-25J3	CLK-20J	CLK-26J	CLK-28J	CLK-35J3	CLK-35J	CLK-40J	CLK-50J	CLK-65J
	Magnetic Starter	With 2-heaters thermal overload relay	–			CLK-15JTC	CLK-25J3T	CLK-20JTC	CLK-26JTC	CLK-28JT	CLK-35J3T	CLK-35JTC	CLK-40JT	CLK-50JTC	CLK-65JT
		With phase-failure protection thermal overload relay	–			CLK-15JGTC	CLK-25J3GT	CLK-20JGTC	CLK-26JGTC	CLK-28JGT	CLK-35J3GT	CLK-35JGTC	CLK-40JGT	CLK-50JGTC	CLK-65JGT
		With 3-heaters thermal overload relay	–			CLK-15JT-3C	CLK-25J3T-3	CLK-20JT-3C	CLK-26JT-3C	CLK-28JT-3	CLK-35J3T-3	CLK-35JT-3C	CLK-40JT-3	CLK-50JT-3C	CLK-65JT-3
Rated insulation voltage			AC600V								AC630V	AC600V			
Rated operational voltage			AC440V								AC440V	AC440V			
Main contacts			2P	3P	2P	3P	3P	3P	3P	3P	3P	3P	3P	3P	3P
Auxiliary contacts			–	1NO (1NC)	–	1NO (1NC)	–	1NO1NC(2NO,2NC)			–	1NO1NC (2NO2NC)		2NO2NC	2NO2NC
Terminal specification			Tab	Tab	Screw	Screw	Screw	Screw	Screw	Screw	Screw	Screw	Screw	Screw	Screw
Main circuit	Rated thermal current		30A	24A	30A	20A	30A	26A	30A	30A	45A	45A	45A	60A	65A
	AC-3: 3-Phase Squirrel-cage motor	200-240V①	–	3kW/15A	–	3kW/15A	5.5kW/26A	4kW/20A	5.5kW/26A	7.5kW/28A	7.5kW/35A	7.5kW/35A	7.5kW/40A	11kW/50A	15kW/65A
		380-440V	–	4.5kW/10A	–	4.5kW/10A	7.5kW/18A	5.5kW/13A	7.5kW/18A	11kW/23A	11kW/26A	11kW/26A	15kW/32A	19kW/40A	30kW/65A
	AC-3: Single-phase motor	100-110V	1.2kW/25A	0.65kW/15A	1.5kW/30A	0.65kW/15A	1.2kW/26A	0.9kW/20A	1.2kW/26A	1.2kW/28A	1.6kW/35A	1.6kW/35A	40A	2.3kW/50A	–
		200-240V①	2.4kW/25A	1.3kW/15A	2.4kW/26A	1.3kW/15A	2.4kW/26A	1.8kW/20A	2.4kW/26A	3.3kW/28A	3.3kW/35A	3.3kW/35A	40A	4.7kW/50A	–
	AC-1: Resistance load	200-240V①	30	24	30	20	30	26	30	30	45	45	45	60	65
		380-440V	21	18	30	18	20	20	28	28	38	38	38	60	65
Auxiliary circuit	Rated thermal current		–	10A	–	10A	–	10A	10A	10A	–	10A	10A	10A	10A
	Rated operation current AC15	24V	–	–	–	–	–	–	–	10A	–	–	–	–	10A
		100-110V	–	10A	–	10A	–	10A	10A	10A	–	10A	10A	10A	10A
		200-240V①	–	6A	–	6A	–	5A	5A	5A	–	5A	5A	5A	6A
		380-440V	–	3A	–	3A	–	3A	3A	3A	–	3A	3A	3A	3A
	Min. operating reted		–	48V 100mA	–	48V 100mA	–	48V 100mA	48V 100mA	48V 100mA	–	48V 100mA	48V 100mA	48V 100mA	24V 100mA
Performance	IEC 60947-4-1		AC-3												
	Mechanical Life		100×10^4ops												
	Electrical Life		25×10^4ops												
	Switching frq.		600(ops/hour)												
Thermal overload relay ②	Standard trip model	Combination Type	–			TJ-18JA GTJ-18JA TJ-18JA-3	TJ-18 GTJ-18 TJ-18-3				TJ-35 GTJ-35 TJ-35-3				
		Rated current (A) (3-point set current scale)	–			0.28-**0.35**-0.42 0.4-**0.5**-0.6 0.56-**0.7**-0.84 0.64-**0.8**-0.96 0.8-**1**-1.2 1-**1.2**-1.4 1.2-**1.4**-1.6 1.4-**1.8**-2.2 1.8-**2.3**-2.8 2.4-**3**-3.6 2.9-**3.6**-4.3 3.7-**4.6**-5.5 4-**5**-6 5.4-**6.7**-8 6-**7.5**-9 7.4-**9.2**-11 8.8-**11**-13 11-**13**-15 12-**15**-18	0.28-**0.35**-0.42 0.4-**0.5**-0.6 0.56-**0.7**-0.84 0.64-**0.8**-0.96 0.8-**1**-1.2 1-**1.2**-1.4 1.2-**1.4**-1.6 1.4-**1.8**-2.2 1.8-**2.3**-2.8 2.4-**3**-3.6 2.9-**3.6**-4.3 3.7-**4.6**-5.5 4-**5**-6 5.4-**6.7**-8 6-**7.5**-9 7.4-**9.2**-11 8.8-**11**-13 11-**13**-15 12-**15**-18 15-**18**-20 18-**22**-26 22-**26**	0.28-**0.35**-0.42 0.4-**0.5**-0.6 0.56-**0.7**-0.84 0.64-**0.8**-0.96 0.8-**1**-1.2 1-**1.2**-1.4 1.2-**1.4**-1.6 1.4-**1.8**-2.2 1.8-**2.3**-2.8 2.4-**3**-3.6 2.9-**3.6**-4.3 3.7-**4.6**-5.5 4-**5**-6 5.4-**6.7**-8 6-**7.5**-9 7.4-**9.2**-11 8.8-**11**-13 11-**13**-15 12-**15**-18 15-**18**-20	0.28-**0.35**-0.42 0.4-**0.5**-0.6 0.56-**0.7**-0.84 0.64-**0.8**-0.96 0.8-**1**-1.2 1-**1.2**-1.4 1.2-**1.4**-1.6 1.4-**1.8**-2.2 1.8-**2.3**-2.8 2.4-**3**-3.6 2.9-**3.6**-4.3 3.7-**4.6**-5.5 4-**5**-6 5.4-**6.7**-8 6-**7.5**-9 7.4-**9.2**-11 8.8-**11**-13 11-**13**-15 12-**15**-18 15-**18**-20 18-**22**-26 22-**26**	7.4-**9.2**-11 8.8-**11**-13 11-**13**-15 12-**15**-18 15-**18**-20 18-**22**-26 21-**26**-31 24-**30**-36 28-**34**-42 34-**42**-48 40-**48**-52		7.4-**9.2**-11 8.8-**11**-13 11-**13**-15 12-**15**-18 15-**18**-20 18-**22**-26 21-**26**-31 24-**30**-36 28-**34**-42 34-**42**-48 40-**48**-52	7.4-**9.2**-11 8.8-**11**-13 11-**13**-15 12-**15**-18 15-**18**-20 18-**22**-26 21-**26**-31 24-**30**-36 28-**34**-42 34-**42**-48 40-**48**-52 46-**56**-65
	Fast-trip model	Combination Type	–			TJ-18JA-F GTJ-18JA-F TJ-18JA-3F	TJ-18-F GTJ-18-F TJ-18-3F				TJ-35-F GTJ-35-F TJ-35-3F				
		Rated current (A) (1-point set current fixed) ③	–			3,4,5,6, 6.7,8,9.2 11,13,15	3,4,5,6, 6.7,8,9.2 11,13,15, 18,24,26	3,4,5,6, 6.7,8,9.2 11,13,15, 18	3,4,5,6,6.7,8,9.2 11,13,15,18,24,26		5,6,7.5,11,13,16,22,30,36			5,6,7.5, 11,13,16, 22,30,36, 44,50	5,6,7.5, 11,13,16, 22,30,36, 44,50,65

Notes. ① The rating operational voltage range of the 200V class of CLK-65H～250H is 200-220V.
② Capacity of thermal overload relates used in magnetic contactors should not be greater than the rated operating current of the 3P motor.
③ We can produce thermal overload relay of phase-failure protection more than 8A.

H Series						
CLK-65H	CLK-80H	CLK-100H	CLK-125H	CLK-150H	CLK-200H	CLK-250H
CLK-65HTC	CLK-80HTC	CLK-100HTC	CLK-125HTC	CLK-150HTC	CLK-200HTC	CLK-250HTC
CLK-65HGTC	CLK-80HGTC	CLK-100HGTC	CLK-125HGTC	CLK-150HGTC	CLK-200HGTC	CLK-250HGTC
CLK-65HT-3C	CLK-80HT-3C	CLK-100HT-3C	CLK-125HT-3C	CLK-150HT-3C	CLK-200HT-3C	CLK-250HT-3C
AC600V						
AC440V						
3P	3P	3P	3P	3P	3P	3P
2NO2NC	2NO2NC	2NO2NC	2NO2NC	2NO2NC	2NO2NC	2NO2NC
Screw	Screw	Screw	Screw	Screw	Screw	Screw
75A	90A	110A	150A	170A	220A	260A
15kW/65A	19kW/80A	22kW/100A	30kW/125A	37kW/150A	50kW/200A	68kW/250A
30kW/65A	37kW/75A	40kW/80A	55kW/110A	60kW/125A	80kW/160A	90kW/180A
–	–	–	–	–	–	–
–	–	–	–	–	–	–
75	90	110	150	170	220	260
75	90	110	150	170	220	260
10A	10A	10A	10A	10A	10A	10A
–	–	–	–	–	–	–
10A	10A	10A	10A	10A	10A	10A
6A	6A	6A	6A	6A	6A	6A
3A	3A	3A	3A	3A	3A	3A
48V 100mA	48V 100mA	48V 100mA	48V 100mA	48V 100mA	24V 10mA	24V 10mA
AC-3						
100×10^4ops						
25×10^4ops						
600(ops/hour)						
TJ-50 GTJ-50 TJ-50-3			TJ-125 GTJ-125 TJ-125-3			TJ-220 GTJ-220 TJ-220-3
12 – **15** – 18 18 – **22** – 26 21 – **26** – 31 24 – **30** – 36 28 – **34** – 42 34 – **42** – 48 40 – **48** – 58 46 – **56** – 64 56 – **68** – 80	12 – **15** – 18 18 – **22** – 26 21 – **26** – 31 24 – **30** – 36 28 – **34** – 42 34 – **42** – 48 40 – **48** – 58 46 – **56** – 64 56 – **68** – 80 68 – **80** – 94	12 – **15** – 18 18 – **22** – 26 21 – **26** – 31 24 – **30** – 36 28 – **34** – 42 34 – **42** – 48 40 – **48** – 58 46 – **56** – 64 56 – **68** – 80 68 – **80** – 94 76 – **90** – 100	34 – **42** – 48 40 – **48** – 58 46 – **56** – 64 56 – **68** – 80 68 – **80** – 94 76 – **90** – 100 85 – **105** – 125 110 – **130** – 150	34 – **42** – 48 40 – **48** – 58 46 – **56** – 64 56 – **68** – 80 68 – **80** – 94 76 – **90** – 100 85 – **105** – 125 110 – **130** – 150 130 – **160** – 190	34 – **42** – 48 40 – **48** – 58 46 – **56** – 64 56 – **68** – 80 68 – **80** – 94 76 – **90** – 100 85 – **105** – 125 110 – **130** – 150 130 – **160** – 190 170 – **200** – 230	65 – **80** – 95 85 – **105** – 125 105 – **130** – 150 130 – **160** – 190 150 – **190** – 230 185 – **230** – 275
TJ-50-F GTJ-50-F TJ-50-3F			TJ-125-F GTJ-125-F TJ-125-3F			–
23,30,35,42, 54,62	23,30,35,42, 54,62,74	23,30,35,42, 54,62,74,90	65,80,95	65,80,95,140	65,80,95,140	–

Manufactured models

Series name		CLK-J Series													CLK-H Series						
Frame		25JF2	15JFC	15JC	25J2	25J3	20J	26J	28J	35J3	35J	40J	50J	65J	65H	80H	100H	125H	150H	200H	250H
Terminal specification		Tab		Screw																	
Contact configuration	Main	2P	3P	3P	2P	3P	3P	3P	3P	3P	3P	3P	3P	3P	3P	3P	3P	3P	3P	3P	3P
	Aux.	—	1NO (1NC)		—	—	1NO1NC (2NO,2NC)			—	1NO1NC (2NO2NC)		2NO2NC								
Magnetic contactors	AC-operated model	○	○	○	○	○	○	○	○	○	○	○	○	○	○	○	○	○	○	○	○
Magnetic contactors	DC-operated model	—	○	○	—	—	—	—	—	—	—	—	—	—	—	—	—	—	—	—	—
Magnetic starters	AC-operated model	—	—	○	—	○	○	○	○	○	○	○	○	○	○	○	○	○	○	○	○
Magnetic starters	DC-operated model	—	—	—	—	—	—	—	—	—	—	—	—	—	—	—	—	—	—	—	—
Magnetic starters – Standard trip model	With 2-heaters thermal CLK-□T(C)	—	—	○	—	○	○	○	○	○	○	○	○	○	○	○	○	○	○	○	○
Magnetic starters – Standard trip model	With phase-failure protection thermal CLK-□GT(C)	—	—	○	—	○	○	○	○	○	○	○	○	○	○	○	○	○	○	○	○
Magnetic starters – Standard trip model	With 3-heaters thermal CLK-□T-3(C)	—	—	○	—	○	○	○	○	○	○	○	○	○	○	○	○	○	○	○	○
Magnetic starters – Fast-trip model	With 2-heaters thermal CLK-□T-F(C)	—	—	○	—	○	○	○	○	○	○	○	○	○	○	○	○	○	○	○	○
Magnetic starters – Fast-trip model	With phase-failure protection thermal CLK-□GT-F(C)	—	—	○	—	○	○	○	○	○	○	○	○	○	○	○	○	○	○	○	○
Magnetic starters – Fast-trip model	With 3-heaters thermal CLK-□T-3F(C)	—	—	○	—	○	○	○	○	○	○	○	○	○	○	○	○	○	○	○	○

Notes. ① ○ : Manufactures
② — : Non manufactures

Model explanation

CLK — 15J DC T 40 — 3 C

- **Type**: CLK
- **Frame and Terminal spec**
  - Tab: 25JF2, 15JF
  - Screw: 15J, 20J, 25J2, 25J3, 26J, 28J, 35J3, 35J, 40J, 50J, 65J, 65H, 80H, 100H, 125H, 150H, 200H, 250H
- **Coil specification**
  - Blank…AC Operated model
  - DC……DC Operated model
- **Specification of starter**
  - Blank …… Contactor
  - T…… Starter
  - GT …… Starter With phase-failure protection thermal
- **Aux.contact Configuration**
  - 15JF, 15J
    - 40C……4NO
    - 31C……3NO1NC
  - 20J, 26J, 28J
    - Blank…1NO1NC
    - 20 …… 2NO
    - 02 …… 2NC
  - 35J, 40J
    - Blank…1NO1NC
    - 22 …… 2NO2NC
  - 50J～250H
    - Blank…2NO2NC
- **Options**
  - 3… Thermal overload relay with 3 heaters
  - F… With fast-trip thermal overlord relay
- **Career mark**
  - Only for magnetic starters. However, except for 25J3T, 35J3T, 28JT, 40JT, 65JT models.

Note. ① CLK-15JF, 15J accompanies "C" at the end of model name.

Operation coil ratings

Coil name ①	Rated voltage of coil ②	Model 25JF,15JFC,15JC 20J～65J 65H～250H	Color of coil nameplate
AC100V (Standard)	100V 50Hz 100-110V 60Hz	○	Blue
AC200V (Standard)	200V 50Hz 200-220V 60Hz	○	Yellow
AC 24V	24V 50Hz 24V 60Hz	○	Green
AC110V	105-110V 50Hz 110-120V 60Hz	○	White
AC120V	110-120V 50Hz 120-130V 60Hz	○	White
AC220V	208-220V 50Hz 220-240V 60Hz	○	White
AC240V	220-240V 50Hz 240-260V 60Hz	○	White
AC400V	380-400V 50Hz 400-440V 60Hz	○	Pink
DC 12V	DC 12V ③	○	White
DC 24V	DC 24V ③	○	White
DC100V	DC100V ③	○	White
DC200V	DC200V ③	○	White
Coil terminal symbol		A1 A2	

Notes. ① Coil name voltage is designed to simplify specification in ordering please use coil name when ordering
② Rated voltage of coil indicates the rated operating frequency marked on the coil.
③ DC coil is available for CLK-15JFC, 15JC, 25JF2, 25J2 and 25J3 only.

Application of thermal overload relay for motors

Motor output Capacity (kW)	220V 3-phase motor (4-pole)			440V 3-phase motor (4-pole)		
	Magnetic Contactor	Thermal overload relay		Magnetic Contactor	Thermal overload relay	
		Model	Rated current (A)		Model	Rated current (A)
0.1	15JC	TJ-18JA TJ-18JA-3 GTJ-18JA	0.7	15JC	TJ-18JA TJ-18JA-3 GTJ-18JA	0.35
0.2			1.2			0.7
0.4			2.3			1.2
0.75			3.6			1.8
1.1			5			2.3
1.5			6.7			3.6
2.2			9.2			4.6
2.5			11			5
2.7			11			5
3.7	20J	TJ-18 TJ-18-3 GTJ-18	15			7.5
4			18			7.5
5.5	25J3 26J 28J		22	20J	TJ-18 TJ-18-3 GTJ-18	11
7.5	35J3 35J 40J	TJ-35 TJ-35-3 GTJ-35	30	25J3 26J 28J		15
11	50J		42	35J3 35J 40J	TJ-35 TJ-35-3 GTJ-35	22
15	65J		56	50J		30
	65H	TJ-50 TJ-50-3 GTJ-50				
19	80H		68			34
22	100H		80	65J		42
				65H	TJ-50 TJ-50-3 GTJ-50	42
30	125H	TJ-125 TJ-125-3 GTJ-125	105	65J	TJ-35 TJ-35-3 GTJ-35	56
				65H	TJ-50 TJ-50-3 GTJ-50	56
37	150H		130	80H		68
40	200H		130	100H		68
45			160	125H	TJ-125 TJ-125-3 GTJ-125	80
55	250H	TJ-220 TJ-220-3 GTJ-220	190			105
75			240	200H		130
90	–	–	–	250H	TJ-220 TJ-220-3 GTJ-220	160

Notes. ① Load current will be different for 3-phase motors with other than four poles,and for non-standard motors. Selected the rated current appropriate for each motor in this case.
② If the same rated current is not available,select the closest current and use the adjusting dial to match it to the rated motor current.

Characteristic of the operation electromagnetic

Item / Model	Operation coil ratings		Operating voltage(V)		Electromagnetic capacity(VA)		Loss(W)	Operating of main contacts(ms)	
	Voltage	Frequency	Minimum (less or aqual)	Open (less or aqual)	Inrush (max)	Sealed (max)	Sealed	Closing	Opening
CLK-25JF2	200V	50Hz	154	120	22	6.4	2.1~3.5	6~20	4~33
	200-220V	60Hz	154	120	24	6.9	2.3~3.7	7~23	4~33
CLK-15JFC CLK-15JC CLK-25J2 CLK-25J3	200V	50Hz	154	120	22	6.4	2.1~3.5	6~20	4~33
	200-220V	60Hz	154	120	24	6.9	2.3~3.7	7~23	4~33
	DC200V	–	132	130	46	4.6	2.8~4.6	14~27	4~33
CLK-20J CLK-26J CLK-28J	200V	50Hz	144	120	43	9.8	2.0~3.7	6~22	4~33
	200-220V	60Hz	150	120	48	9.0	1.8~3.3	8~25	4~33
CLK-35J3	200V	50Hz	170	150	50	8.8	1.8~3.0	6~22	4~33
	200-220V	60Hz	170	150	56	8.0	1.3~2.9	8~27	4~33
CLK-35J CLK-40J CLK-50J	200V	50Hz	144	120	92	14.6	3.0~5.7	5~20	4~33
	200-220V	60Hz	148	120	100	14.5	3.2~6.0	8~23	4~33
CLK-65J	200V	50Hz	153	140	73	11.0	3.9~6.7	6~25	4~33
	200-220V	60Hz	160	140	112	17.2	4.2~7.0	10~26	4~33
CLK-65H	200V	50Hz	145	120	175	19.0	3.8~6.5	8~35	4~33
	200-220V	60Hz	148	120	190	18.5	4.2~7.0	8~35	4~33
CLK-80H CLK-100H	200V	50Hz	147	120	255	23.0	5.2~8.6	5~35	4~33
	200-220V	60Hz	150	120	270	23.1	5.9~9.9	5~35	4~33
CLK-125H CLK-150H	200V	50Hz	155	120	560	55	13.5~19.0	12~34	8~33
	200-220V	60Hz	158	120	585	55	15.5~21.0	12~34	8~33
CLK-200H CLK-250H	200V	50Hz	148	120	682	64	9.5~17.5	16~31	9~33
	200-220V	60Hz	154	120	726	61	8.1~19.0	16~35	9~33

Notes. ① IEC 60947-4-1 stipulate that 85% of rated voltage be applied to coil for switching operation, with satisfactory performance.
② Minimum operating voltage indicate 20 operations with zero failure.
③ 60Hz is used for 220V input, in addition to operating voltage.
④ Values measured at 20℃±15℃ ambition temperature.
⑤ Select operating transformers with capacities of at least a third of the electromagnet inrush capacity.

Standard service conditions

(1) Standard ambient temperature	Open Model (to be used in control box)55℃
(2) Maximum ambient temperature	Open Model 60℃(mean daily temperature not to exceed 50℃)
(3) Minimum ambient temperature	−5℃
(4) Ambient storage temperature	−20℃~70℃
(5) Relative humidity	45~85%RH
(6) Altitude	2,000m max.
(7) Vibration-resistant	10~55Hz 2G
(8) Shock-resistant	5G
(9) Atmosphere	Don't dew and freeze, and must not contain much dust, smoke, corrosive gas, flammable gas, vapor, and salt. And it is impossible to use a hermetically sealed box. (Except CLK-25JF2, 15JFC,15JC)
(10)Pollution degree	Please use magnetic contactors and starters in environment of lower than Pollution degree3. Pollution degree3:Conductive pollutant occurs. Or Pollution of dry non-conductive occurs in normal condition. But pollutant of conductive occurs in dew condensation condition. (IEC 60947-1)

Mounting space

For mounting more than one magnetic starters in arow, make sure that the space between the units is more than the distance indicated in the table below. Also, be sure that the space between the starter and other metalic items is more than the distance indicated below.

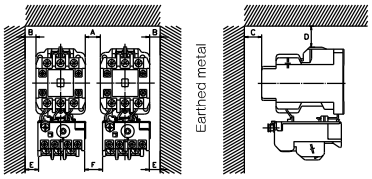

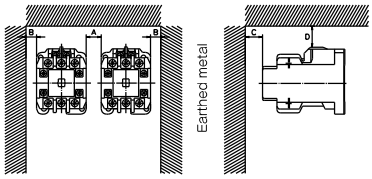

【In the case of Faston terminal, please ensure the space(C) from RESEPVTACUL.】

Model \ Space (mm)		A	B	C	D	E	F
Magnetic Starters	CLK-15JTC,25J3T	5	5	5	10	5	5
	CLK-20,26,28JT (C)	5	5	5	10	5	5
	CLK-35J3T,35,40,50,65JT (C)	5	5	5	10	5	5
	CLK-65～100HTC	5	5	5	30	5	5
	CLK-125,150HTC	5	5	5	40	5	5
	CLK-200HTC	5	10	5	50	10	5
	CLK-250HTC	–	–	5	50	10	15

Notes. ①The space indicates the distance from the largest part of the product.
②Also applies to magnetic starters with 3-element thermal overload relays.

Model \ Space (mm)		A	B	C	D
Magnetic Contactor	CLK-25JF2,15JFC	5	5	5	10
	CLK-15JC	5	5	5	10
	CLK-25J2,25J3	5	5	5	10
	CLK-20,26,28J	5	5	5	10
	CLK-35J3,35,40,50,65J	5	5	5	10
	CLK-65～100H	5	5	5	30
	CLK-125,150H	5	5	5	40
	CLK-200H	5	10	5	50
	CLK-250H	20	10	5	50

Note. ① The space indicates the distance from the largest part of the product.

Model \ Item	Scerw size			Suitable crimp-style terminal		Tightening torque N・m {kgf・cm}	
	Main circuit		Control circuit	Main circuit	Control circuit	Main circuit	Control circuit
	Contactor	Thermal					
CLK-25JF2	–	–	–	#250series (Mathch to POSITIVE ROCK CONNECTION)		–	–
CLK-15JFC							
CLK-15JC	M3.5	M4	M3.5	1.25-3.5～2-3.5 1.25-4～5.5-4①	1.25-3.5 ≀ 2-3.5	M3.5:0.8～1.2{8～12} M4 :1.2～1.8{12～18}①	0.8～1.2{8～12}
CLK-25J2,25J3	M4	M4		1.25-4～5.5-4		1.2～1.8{12～18}	
CLK-20J							
CLK-26J,28J							
CLK-35J3,35J,40J	M5	M5		1.25-5～14-5		2.4～3.5{24～36}	
CLK-50J							
CLK-65J							
CLK-65H	M6	M6		2-6～38-6S②		3.9～5.9{40～60}	
CLK-80H							
CLK-100H							
CLK-125H	M8	M8		2-8～CB80-8③		9.0～13.5{92～138}	
CLK-150H							
CLK-200H	M8	M8		2-8～CB100-8③			
CLK-250H	M10	M10		2-10～150-10		18.1～27.0{185～275}	

Notes. ①Thermal overload relay side
②Standard 38-6 crimp-type terminal is to wide. Please use 38-6S (Nichifu Terminal industries CO.,Ltd.) or 38-S6 (Japan Solderless Terminal Mfg. CO.,Ltd.)
③Standard 80-8 and 100-8 crimp-type terminal lugs are too wide. Please use CB-type terminal connectors for low-voltage switching devices (Nichifu Terminal industries CO.,Ltd.) or for molded case circuit breakers (Japan Solderless Terminal Mfg. CO.,Ltd.).

Power supply voltage of the control circuit

The voltage and frequency of the operating circuit should be the same as the rated voltage and frequency of the operating coil, if the voltage is greater than 100% of the rated voltage of the coil, this will result various deterio rations for coil insulation and for mechanical and electrical performances. At the inrush time, if the power supply voltage is less than the minimum operating voltage of contactors, it may cause the coil barning out because of small coil impedance, contact chattering or contact welding.

Application in the circuit exceeding AC380V

When using solderless terminals for the circuit exceeding AC380V, use of solderless terminals with insulation tube is recommended.

Auxiliary contact terminal (NC)

When NC auxiliary contact terminal is inserted into the magnetic contactor,be sure to push the contactor rod insertion. (When the terminal falls out or inspection.) (Except CLK-25JF2, CLK-15JFC, CLK-15JC, 25J2, 25J3.)

Maintenance

· Contact
The contact tips will discolor slightly and become irregular in using, but this will not affect their pertormance. Do not file the tips, as this will shorten their contact life. Contacts should be replaced when the thickness of the contact tips becomes half the size of new ones. All three phases should be replaced at the same time.

· Core
To minimize hum level, contact surfaces of cores are polished to a high degree of flatness and coated with a corrosion-resistant finish. As will as being matched to the shading coil, movable core and fixed core. However, in long-term storage, dirt, iron filings, and rust through humidity on the core surfaces may cause core humming. So appropriate storage conditions are highly requested.

· Do not lubricate
Abrasion of moving parts is very small. The switch is designed to operate with stable characteristics. Lubrication may cause the magnetic contactor to prevent its normal operations. Please exercise caution, especially when used in oil-operated machinery.

Connecting of tab terminal

· For connecting,please put "#250" to use.
It is possible to use "POSSITIVE ROCK CONNECTER" also.

· Faston terminal is marked with a triangle mark.
When connecting, plase verifies mark.
But coil terminal isn't represented.

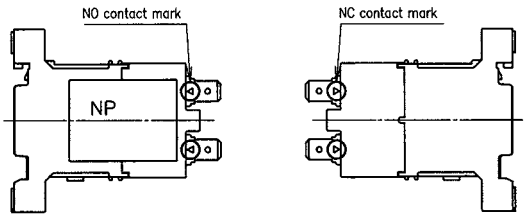

· When connecting, make certain that Faston terminal is connected.
When connecting, plase plwg in a RESEPUTACUL prependicalar to the Faston terminal.

· When pulling out RESEPUTACUL from terminal, please pull out RESEPUTACUL one by one.
And pull out RESEPUTACUL perpendicular to the Faston terminal.

＜Cautions＞

When a contact welding is occurred by causes indicated below, there would be the danger such as reckless driving of machines and abnormal heat of the heater. Please use with the commiserations for the safety supposing the failure of making and breaking operations by mechanical rocking or contact welding.
Moreover, the thermal overload relay cannot protect phenomena.

· Making / Breaking current and operation under use over-spec.
· Abnormal consumption of contact-tip and the life of contact-tip.
· Secular variation
· Chattering of contact.
· Instantaneous voltage drops of the power supply.

25JF2

CLK-25JF2

(Only for 2-pole type)

Ratings

Frame			25J
Rated capacity	AC−3 (kW)	110V	1.2
		240V	2.4
	AC−1 (A)	240V	30
		440V	21

Notes. Rated capacity is single phase motor rating.

Conforming wire size and tightening torque

		Conforming terminal connector
Contactor	Main circuit	#250 series (Mathch to POSITIVE ROCK CONNECTION)
	Control circuit	

Magnetic contactor CLK-25JF2

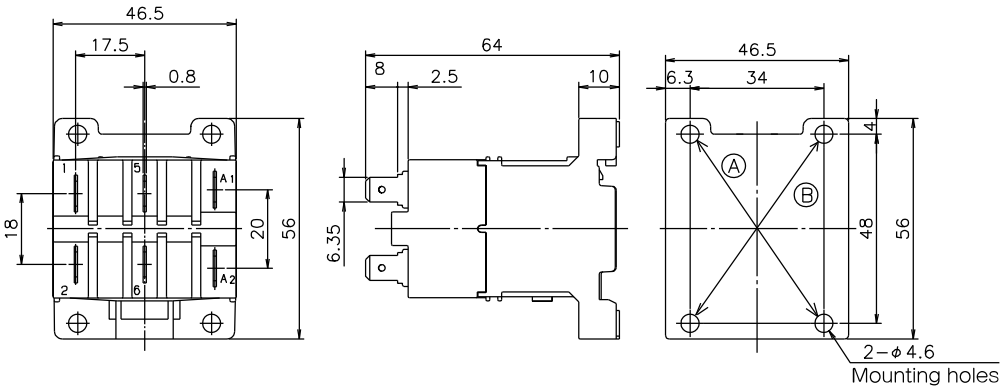

Ⓐ 34×48 (recommended)
Ⓑ 34×48 (compatible with CLK-15H)

Contact configuration

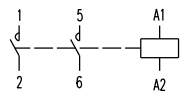

Weight 0.16kg

15JFC

CLK-15JFC

Ratings

Frame			15J
Rated capacity	AC−3 (kW)	240V	3
		440V	4.5
	AC−1 (A)	240V	24
		440V	18

Conforming wire size and tightening torque

		Conforming terminal connector
Contactor	Main circuit	#250 series (Mathch to POSITIVE ROCK CONNECTION)
	Control circuit	

Magnetic contactor CLK-15JFC, 15JFDCC

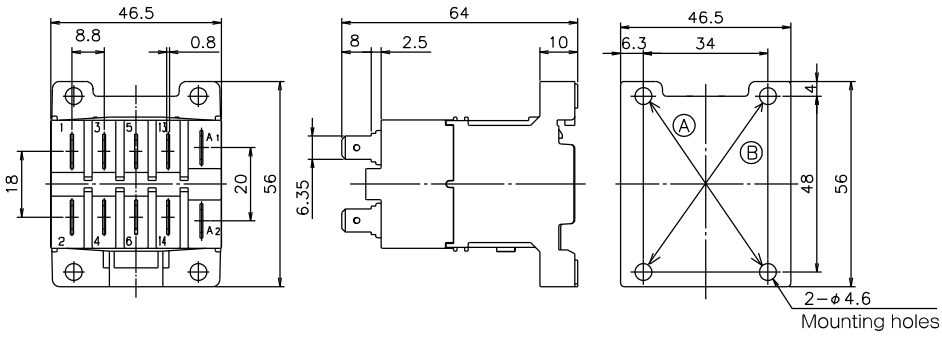

Ⓐ 34×48 (recommended)
Ⓑ 34×48 (CLK-15H)

Aux. Contact	Contact configuration
1NO	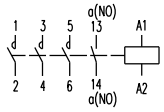
1NC	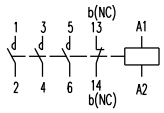

Weight 15JFC 0.16kg
15JFDCC 0.18kg

15JC

CLK-15JC CLK-15JTC

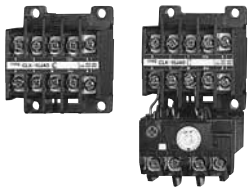

Ratings

Frame			15J
Rated capacity	AC−3 (kW)	240V	3
		440V	4.5
	AC−1 (A)	240V	20
		440V	18

Conforming wire size and tightening torque

		Screw size	Conforming terminal connector	Tightening torque N·m(kgf·cm)
Contactor	Main circuit	M3.5	1.25−3.5 ~ 2−3.5	0.8~1.2 (8~12)
	Control circuit			
Thermal overload relay	Main circuit	M4	1.25−4~5.5−4	1.2~1.8 (12~18)
	Control circuit	M3.5	1.25−3.5~2−3.5	0.8~1.2 (8~12)

Magnetic contactor CLK-15JC, 15JDCC

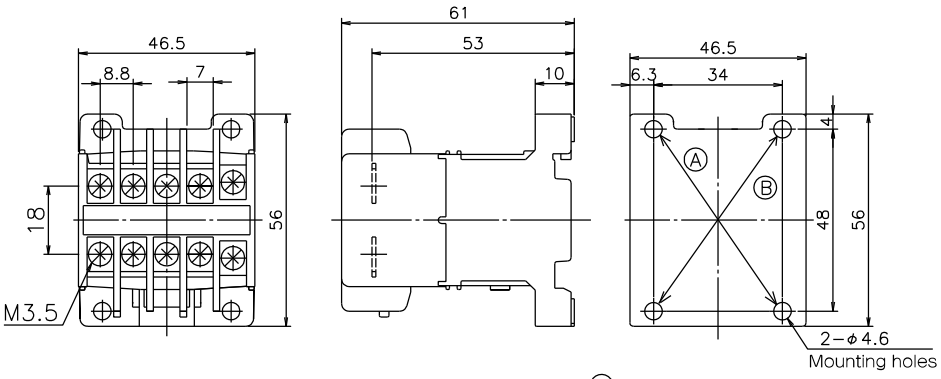

Ⓐ 34×48 (recommended)
Ⓑ 34×48 (compatible with CLK-15H)

Aux. Contact	Contact configuration
1a (1NO)	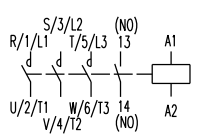
1b (1NC)	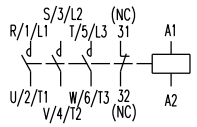

Weight 15JC=0.17kg
15JDCC=0.19kg

Magnetic starter CLK-15JTC (15JGTC, 15JT-30)

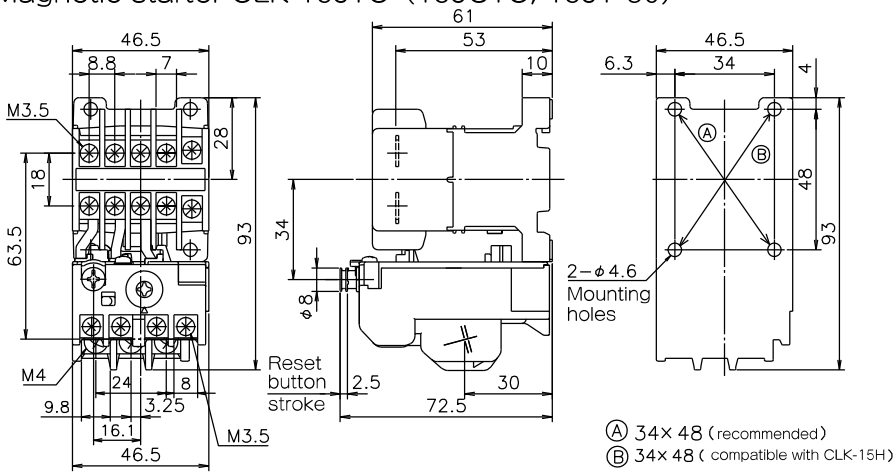

Ⓐ 34×48 (recommended)
Ⓑ 34×48 (compatible with CLK-15H)

Aux. Contact	Contact configuration
1a (1NO)	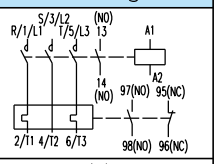
1b (1NC)	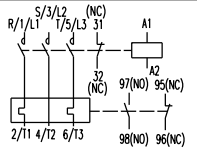
For 3-heaters and phase-failure protection	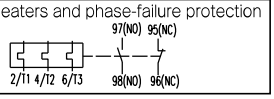

Weight 0.29kg

25J

CLK-25J2·25J3 CLK-25J3T

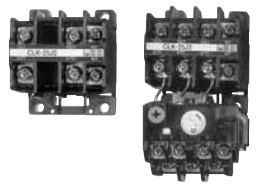

Ratings

Frame			2P		3P	
			25J2	25J201	25J3	25J301
Rated capacity	AC−3 (A)	110V	30	30	26	30
		240V	26	30	26	26
		440V	–	–	18	–
	AC−1 (A)	110V	30	32	30	30
		240V	30	32	30	30
		440V	–	–	20	–

Conforming wire size and tightening torque

		Screw size	Conforming terminal connector	Tightening torque N·m(kgf·cm)
Contactor	Main circuit	M4	1.25−4~5.5−4	1.2~1.8 (12~18)
	Control circuit	M3.5	1.25−3.5~2−3.5	0.8~1.2 (8~12)
Thermal overload relay	Main circuit	M4	1.25−4~5.5−4	1.2~1.8 (12~18)
	Control circuit	M3.5	1.25−3.5~2−3.5	0.8~1.2 (8~12)

Magnetic contactor CLK-25J2,25J201

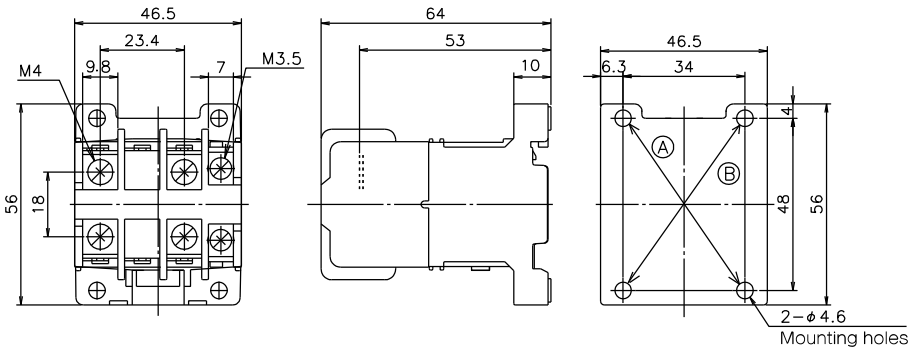

Ⓐ 34×48 (recommended)
Ⓑ 34×48

Aux. Contact	Contact configuration
–	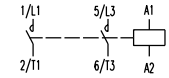
1NC	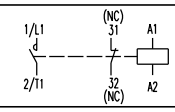

Weight 0.17kg

Magnetic contactor CLK-25J3,25J301

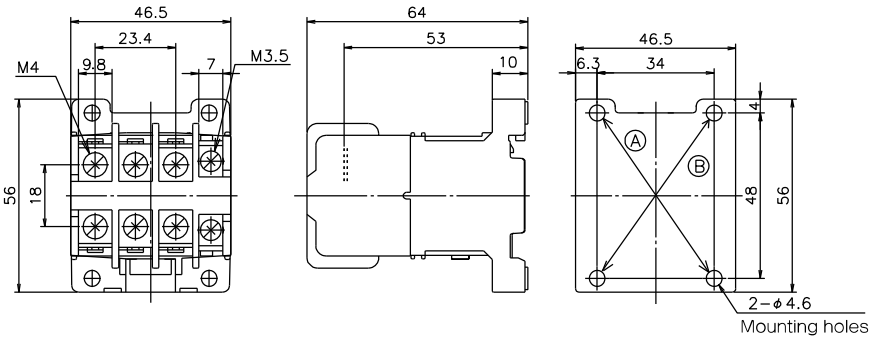

Ⓐ 34×48 (recommended)
Ⓑ 34×48

Aux. Contact	Contact configuration
–	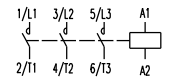
1NC	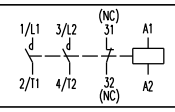

Weight 0.17kg

Magnetic starter CLK-25J3T (25J3GT,25J3T-3)

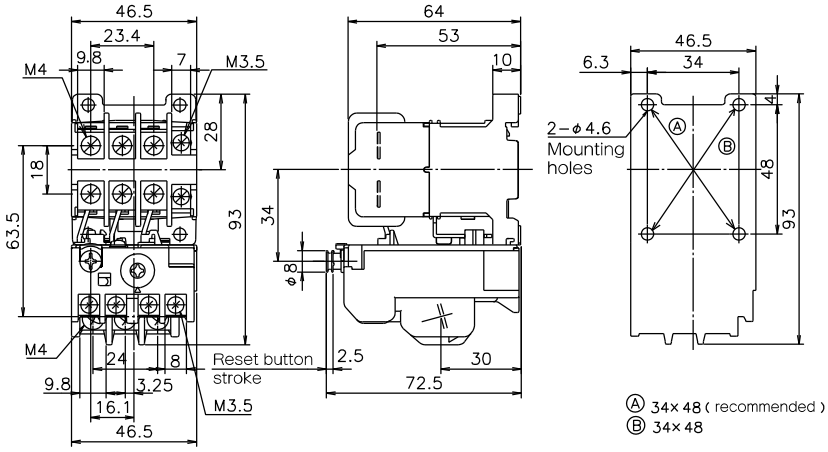

Ⓐ 34×48 (recommended)
Ⓑ 34×48

Aux. Contact	Contact configuration
–	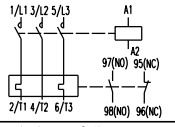
For 3-heaters and phase-failure protection	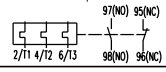

Weight 0.29kg

20J・26J・28J

CLK-20J·26J·28J CLK-20JTC·26JTC·28JT

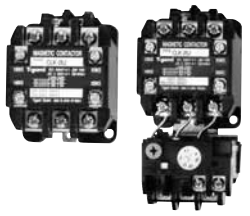

Ratings

Frame			20J	26J	28J
Rated capacity	AC−3 (kW)	240V	4	5.5	7.5
		440V	5.5	7.5	11
	AC−1 (A)	240V	26	30	30
		440V	20	28	28

Conforming wire size and tightening torque

		Screw size	Conforming terminal connector	Tightening torque N·m(kgf·cm)
Contactor	Main circuit	M4	1.25−4~5.5−4	1.2~1.8 (12~18)
	Control circuit	M3.5	1.25−3.5~2−3.5	0.8~1.2 (8~12)
Thermal overload relay	Main circuit	M4	1.25−4~5.5−4	1.2~1.8 (12~18)
	Control circuit	M3.5	1.25−3.5~2−3.5	0.8~1.2 (8~12)

Magnetic contactor CLK-20J, 26J, 28J

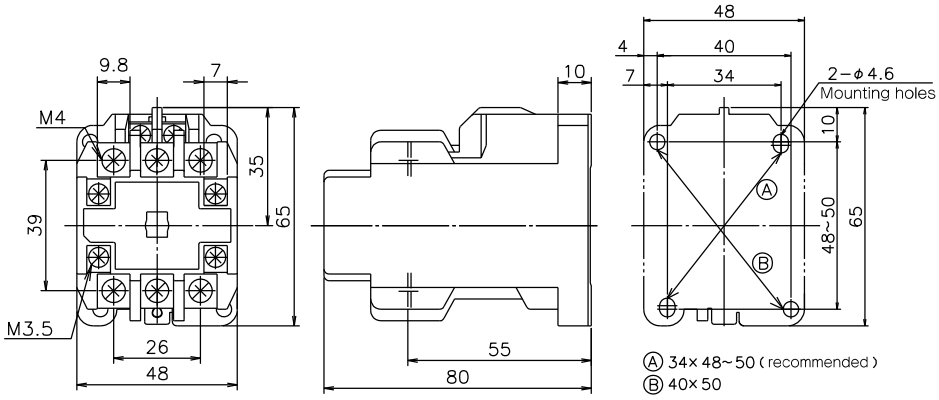

Aux. Contact	Contact configuration
1a1b (1NO1NC)	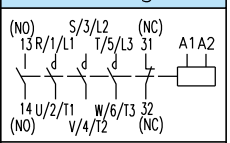
2a (2NO)	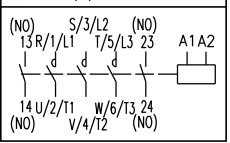

Weight 0.27kg

Magnetic starter CLK-20JTC, 26JTC, 28JT(20JGTC, 26JGTC, 28JGT, 20JT-3C, 26JT-3C, 28JT-3)

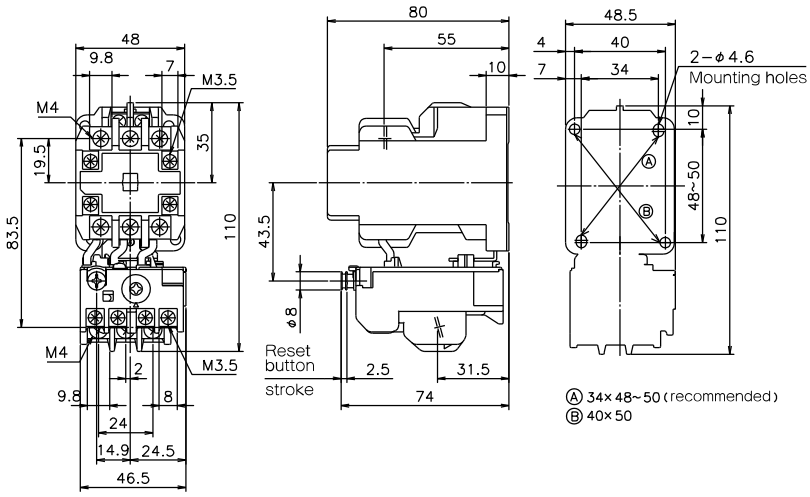

Aux. Contact	Contact configuration
1a1b (1NO1NC)	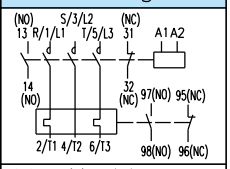
2a (2NO)	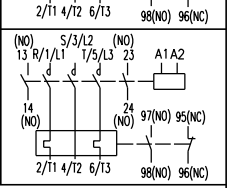
For 3-heaters and phase-failure protection	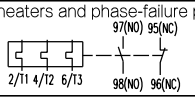

Weight 0.37kg

35J3

CLK-35J3 CLK-35J3T

Ratings

Frame			35J3
Rated capacity	AC−3 (kW)	240V	7.5
		440V	11
	AC−1 (A)	240V	45
		440V	38

Conforming wire size and tightening torque

		Screw size	Conforming terminal connector	Tightening torque N·m(kgf·cm)
Contactor	Main circuit	M5	1.25−5~14−5	2.4~3.5 (24~36)
	Control circuit	M3.5	1.25−3.5~2−3.5	0.8~1.2 (8~12)
Thermal overload relay	Main circuit	M5	1.25−5~14−5	2.4~3.5 (24~36)
	Control circuit	M3.5	1.25−3.5~2−3.5	0.8~1.2 (8~12)

Magnetic contactor CLK-35J3

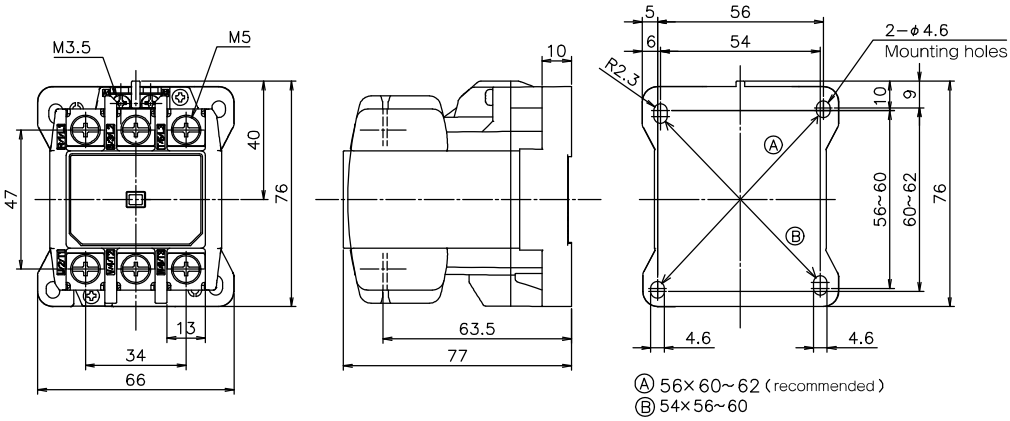

Contact configuration

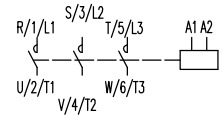

Weight 0.33kg

Magnetic starter CLK-35J3T (35J3GT, 35J3T-3)

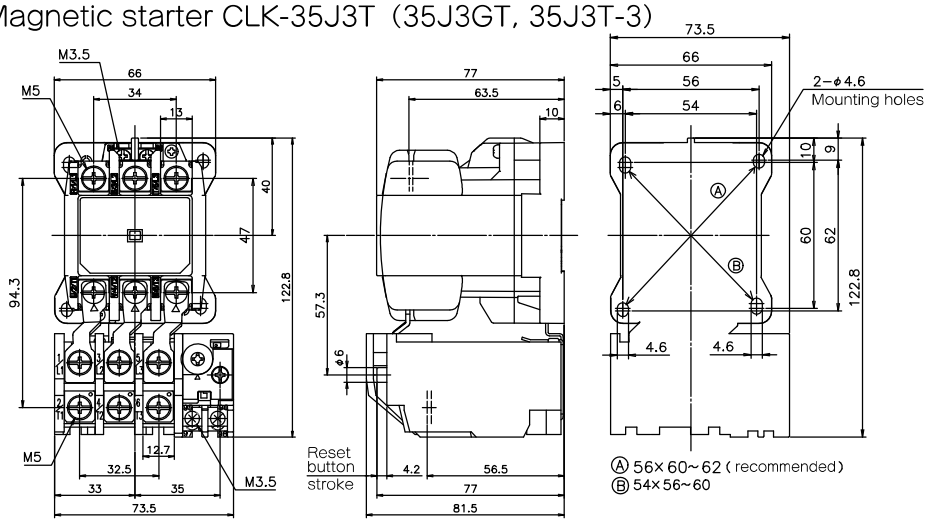

Contact configuration

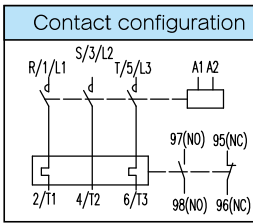

Weight 0.58kg

6

35J・40J

CLK-35J·40J CLK-35JTC·40JT

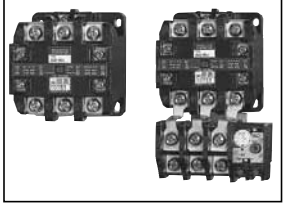

Ratings

Frame			35J	40J
Rated capacity	AC−3 (kW)	240V	7.5	7.5
		440V	11	15
	AC−1 (A)	240V	45	45
		440V	38	38

Conforming wire size and tightening torque

		Screw size	Conforming terminal connector	Tightening torque N·m(kgf·cm)
Contactor	Main circuit	M5	1.25−5~14−5	2.4~3.5 (24~36)
	Control circuit	M3.5	1.25−3.5~2−3.5	0.8~1.2 (8~12)
Thermal overload relay	Main circuit	M5	1.25−5~14−5	2.4~3.5 (24~36)
	Control circuit	M3.5	1.25−3.5~2−3.5	0.8~1.2 (8~12)

Magnetic contactor CLK-35J, 40J

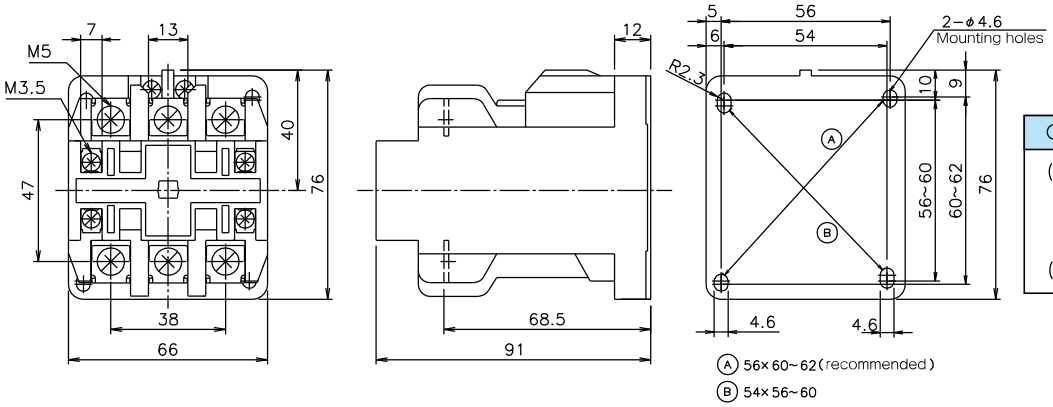

Contact configuration

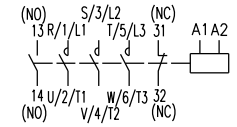

Weight 0.55kg

Magnetic starter CLK-35JTC, 40JT (35JGTC, 40JGT, 35JT-3C, 40JT-3)

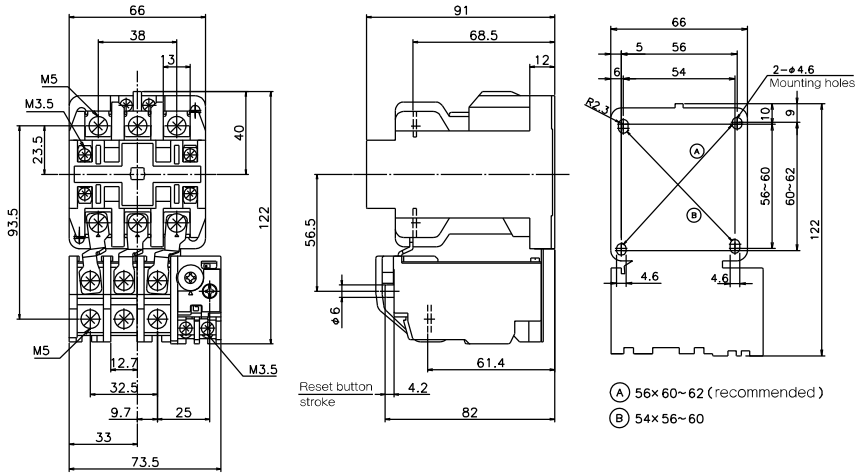

Contact configuration

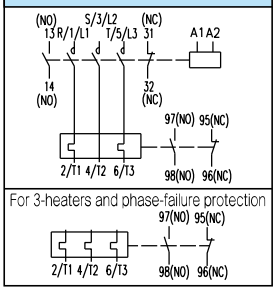

Weight 0.77kg

50J

CLK-50J CLK-50JTC

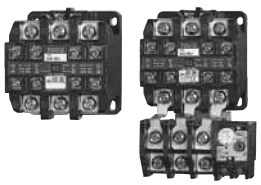

Ratings

Frame			50J
Rated capacity	AC−3 (kW)	240V	11
		440V	19
	AC−1 (A)	240V	60
		440V	60

Conforming wire size and tightening torque

		Screw size	Conforming terminal connector	Tightening torque N·m(kgf·cm)
Contactor	Main circuit	M5	1.25−5~14−5	2.4~3.5 (24~36)
	Control circuit	M3.5	1.25−3.5~2−3.5	0.8~1.2 (8~12)
Thermal overload relay	Main circuit	M5	1.25−5~14−5	2.4~3.5 (24~36)
	Control circuit	M3.5	1.25−3.5~2−3.5	0.8~1.2 (8~12)

Magnetic contactor CLK−50J

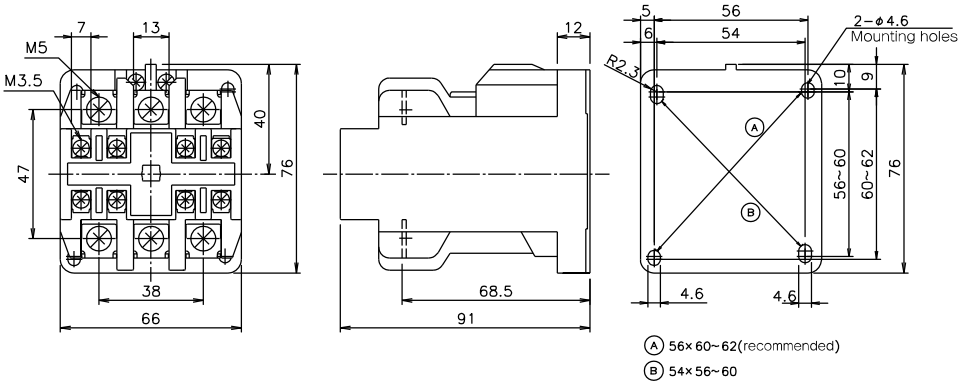

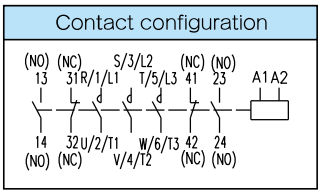

Weight 0.55kg

Magnetic starter CLK−50JTC (50JGTC, 50JT-3C)

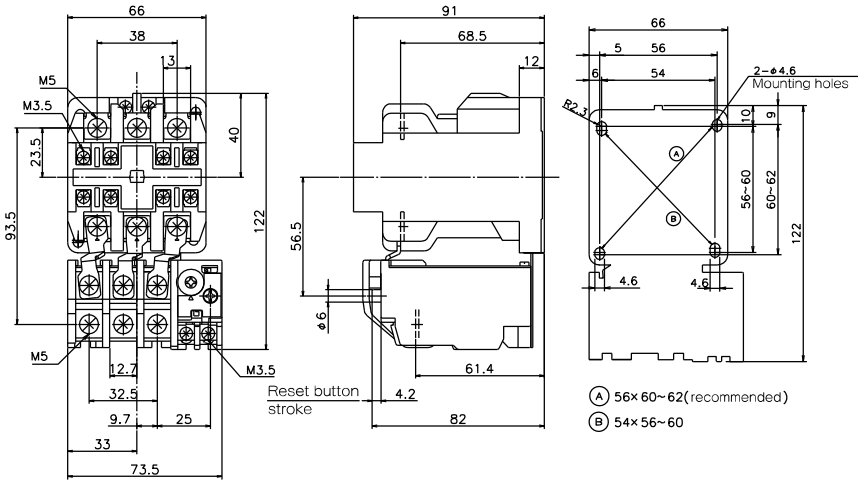

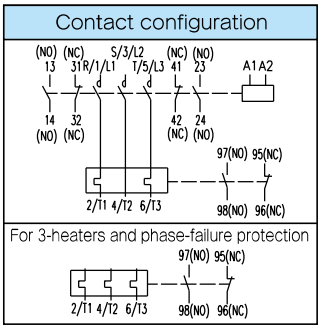

Weight 0.77kg

65J

CLK-65J CLK-65JT

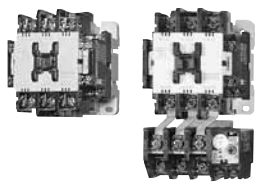

Ratings

Frame			65J
Rated capacity	AC−3 (kW)	240V	15
		440V	30
	AC−1 (A)	240V	65
		440V	65

Conforming wire size and tightening torque

		Screw size	Conforming terminal connector	Tightening torque N·m(kgf·cm)
Contactor	Main circuit	M5	1.25−5~14−5	2.4~3.5 (24~36)
	Control circuit	M3.5	1.25−3.5~2−3.5	0.8~1.2 (8~12)
Thermal overload relay	Main circuit	M5	1.25−5~14−5	2.4~3.5 (24~36)
	Control circuit	M3.5	1.25−3.5~2−3.5	0.8~1.2 (8~12)

Magnetic contactor CLK-65J

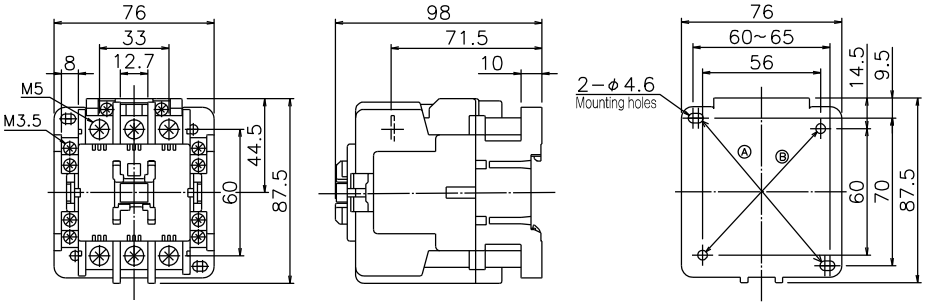

Ⓐ60~65×70 (recommended)
Ⓑ56×60 (compatible with CLK−35J, 50J)

Contact configuration

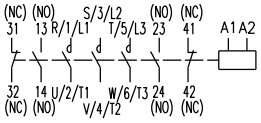

Weight 0.68kg

Magnetic starter CLK-65JT (65JGT, 65JT-3)

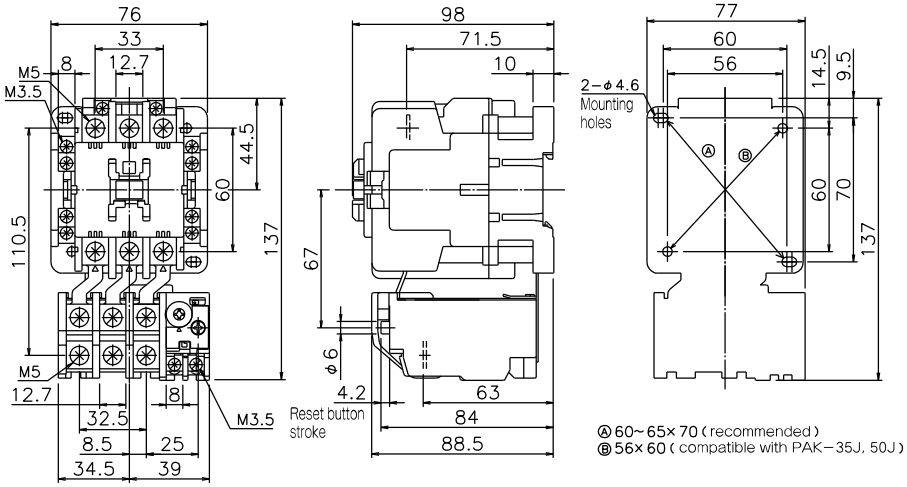

Ⓐ60~65×70 (recommended)
Ⓑ56×60 (compatible with PAK−35J, 50J)

Contact configuration

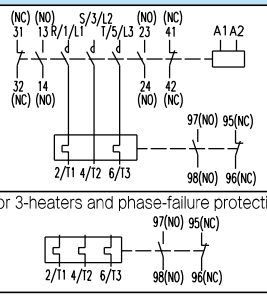

Weight 0.91kg

65H・80H・100H

CLK-65H 80H 100H

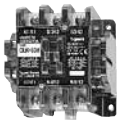

CLK-65HTC 80HTC 100HTC

Ratings

Frame			65H	80H	100H
Rated capacity	AC−3 (kW)	220V	15	19	22
		440V	30	37	40
	AC−1 (A)	220V	75	90	110
		440V	75	90	110

Conforming wire size and tightening torque

		Screw size	Conforming terminal connector	Tightening torque N·m(kgf·cm)
Contactor	Main circuit	M6	2−6~38−6S	3.9~5.9 (40~60)
	Control circuit	M3.5	1.25−3.5~2−3.5	0.8~1.2 (8~12)
Thermal overload relay	Main circuit	M6	2−6~38−6S	3.9~5.9 (40~60)
	Control circuit	M3.5	1.25−3.5~2−3.5	0.8~1.2 (8~12)

Magnetic contactor CLK-65H, 80H, 100H

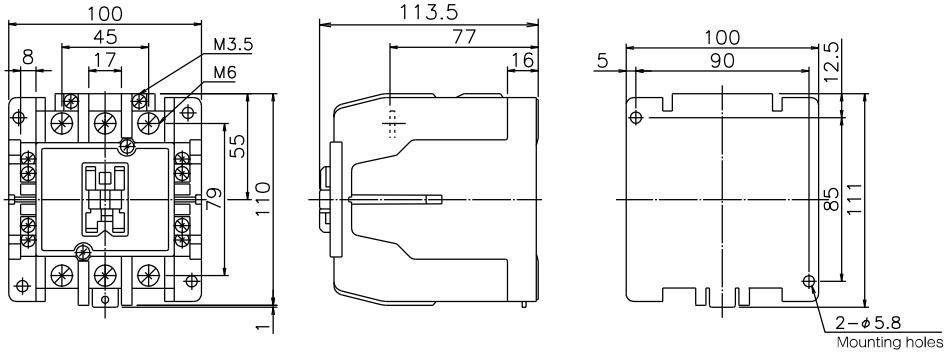

Contact configuration

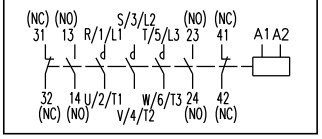

Weight 65H=1.3kg
80H,100H=1.5kg

Magnetic starter CLK-65HTC,80HTC,100HTC(65HGTC,80HGTC,100HGTC,65HT-3C,80HT-3C,100HT-3C)

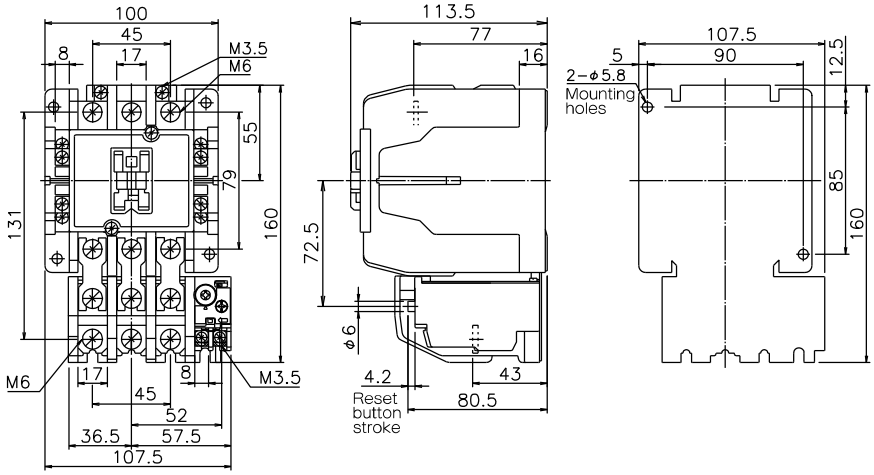

Contact configuration

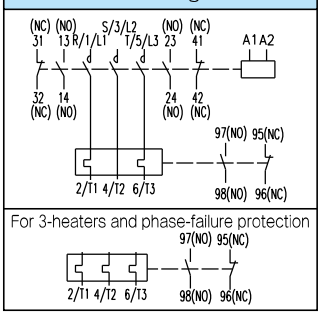

Weight 65HTC=1.7kg
80HTC,100HTC=1.9kg

125H・150H

CLK-125H 150H　CLK-125HTC 150HTC

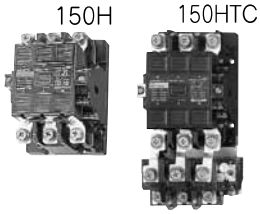

Ratings

Frame			125H	150H
Rated capacity	AC−3 (kW)	220V	30	37
		440V	55	60
	AC−1 (A)	220V	150	170
		440V	150	170

Conforming wire size and tightening torque

		Screw size	Conforming terminal connector	Tightening torque N·m(kgf·cm)
Contactor	Main circuit	M8	2−8~CB80−8	9.0~13.5 (92~138)
	Control circuit	M3.5	1.25−3.5~2−3.5	0.8~1.2 (8~12)
Thermal overload relay	Main circuit	M8	2−8~CB80−8	9.0~13.5 (92~138)
	Control circuit	M3.5	1.25−3.5~2−3.5	0.8~1.2 (8~12)

Magnetic contactor CLK-125H, 150H

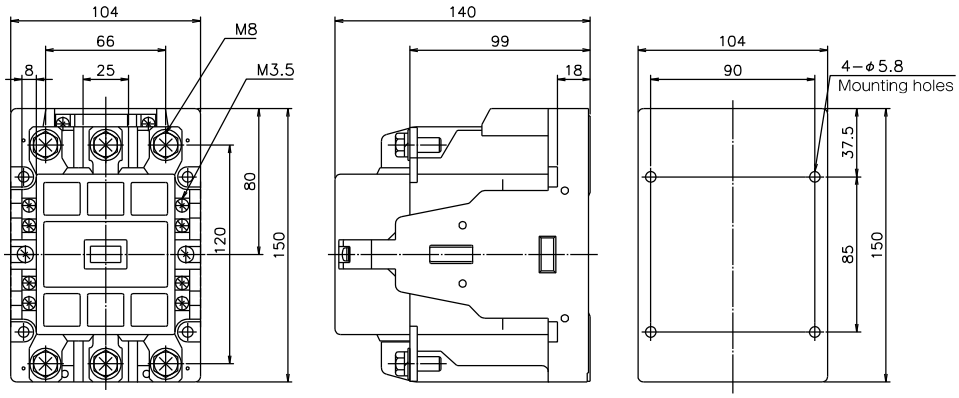

Contact configuration

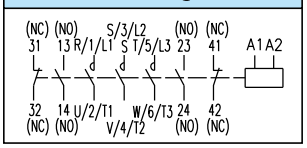

Weight 2.9kg

Magnetic starter CLK-125HTC, 150HTC（125HGTC, 150HGTC, 125HT-3C, 150HT-3C）

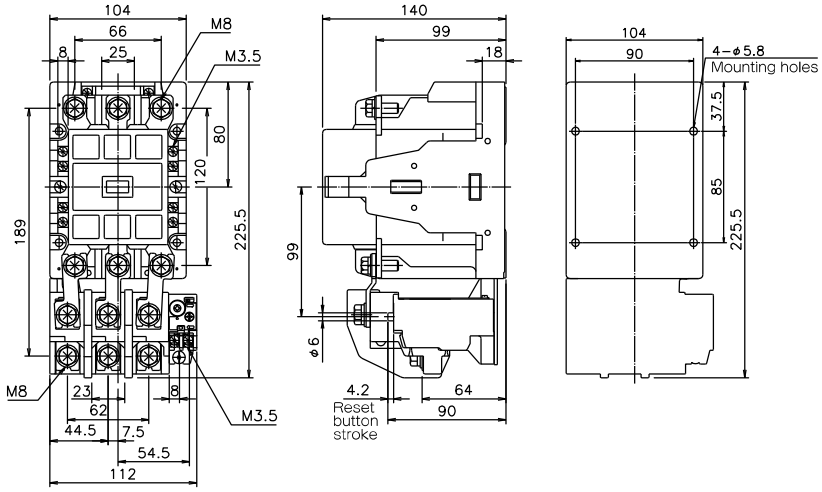

Contact configuration

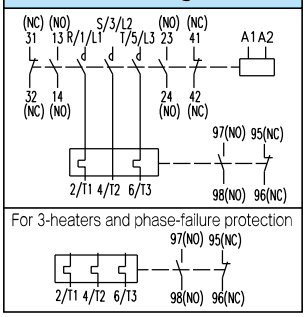

Weight 3.7kg

200H

CLK-200H CLK-200HTC

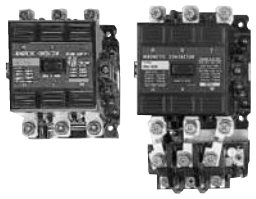

Ratings

Frame			200H
Rated capacity	AC−3 (kW)	220V	50
		440V	80
	AC−1 (A)	220V	220
		440V	220

Conforming wire size and tightening torque

		Screw size	Conforming terminal connector	Tightening torque N·m(kgf·cm)
Contactor	Main circuit	M8	2−8~CB100−8	9.0~13.5 (92~138)
	Control circuit	M3.5	1.25−3.5~2−3.5	0.8~1.2 (8~12)
Thermal overload relay	Main circuit	M8	2−8~CB100−8	9.0~13.5 (92~138)
	Control circuit	M3.5	1.25−3.5~2−3.5	0.8~1.2 (8~12)

Magnetic contactor CLK-200H

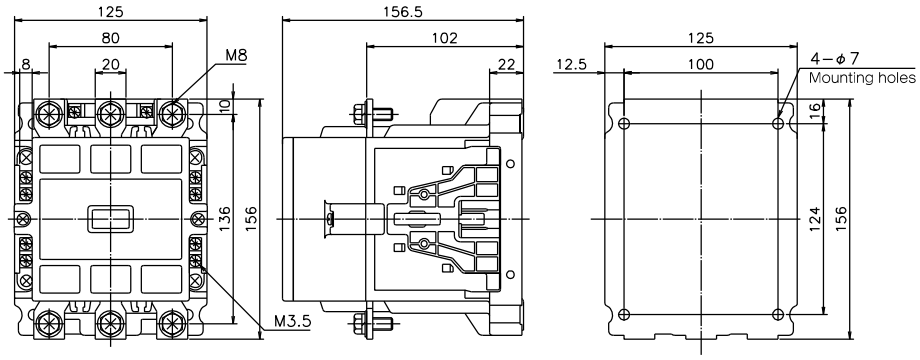

Contact configuration

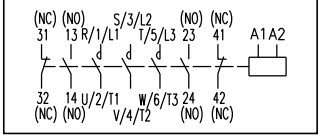

Weight 3.5kg

Magnetic starter CLK-200HTC (200HGTC, 200HT-3C)

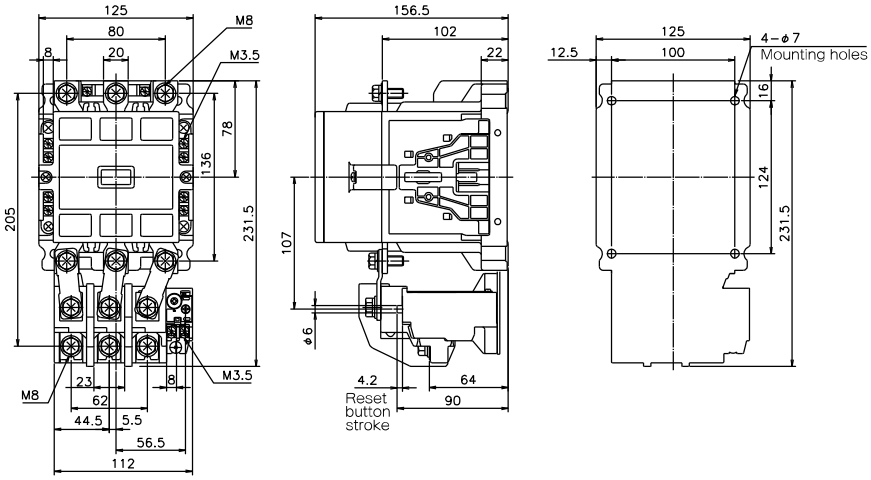

Contact configuration

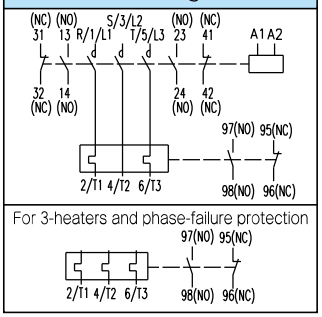

Weight 4.6kg

6

250H

CLK-250H CLK-250HTC

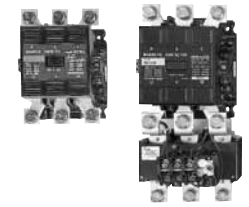

Ratings

Frame			250H
Rated capacity	AC−3 (kW)	220V	68
		440V	90
	AC−1 (A)	220V	260
		440V	260

Notes. Rated capacity is single phase motor rating.

Conforming wire size and tightening torque

		Screw size	Conforming terminal connector	Tightening torque N·m(kgf·cm)
Contactor	Main circuit	M10	2−10~150−10	18.1~27.0 (185~275)
	Control circuit	M3.5	1.25−3.5~2−3.5	0.8~1.2 (8~12)
Thermal overload relay	Main circuit	M10	2−10~150−10	18.1~27.0 (185~275)
	Control circuit	M3.5	1.25−3.5~2−3.5	0.8~1.2 (8~12)

Magnetic contactor CLK-250H

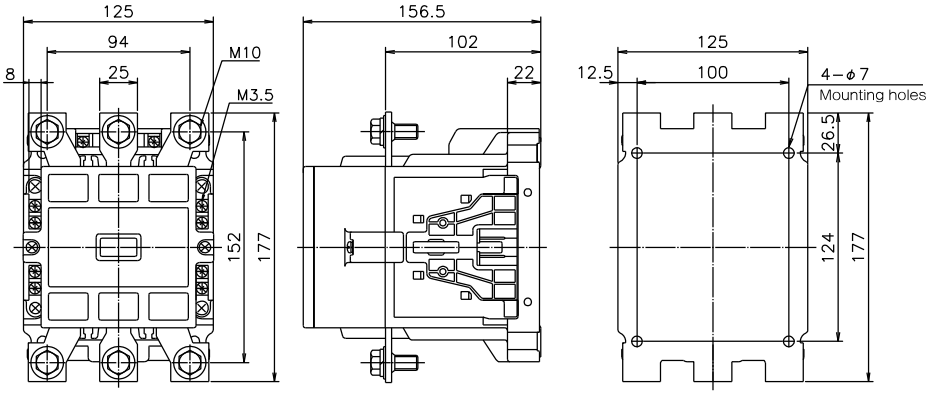

Contact configuration

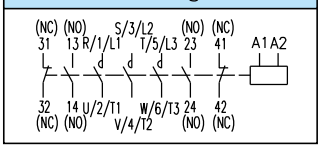

Weight 4.0kg

Magnetic starter CLK-250HTC (250HGTC, 250HT-3C)

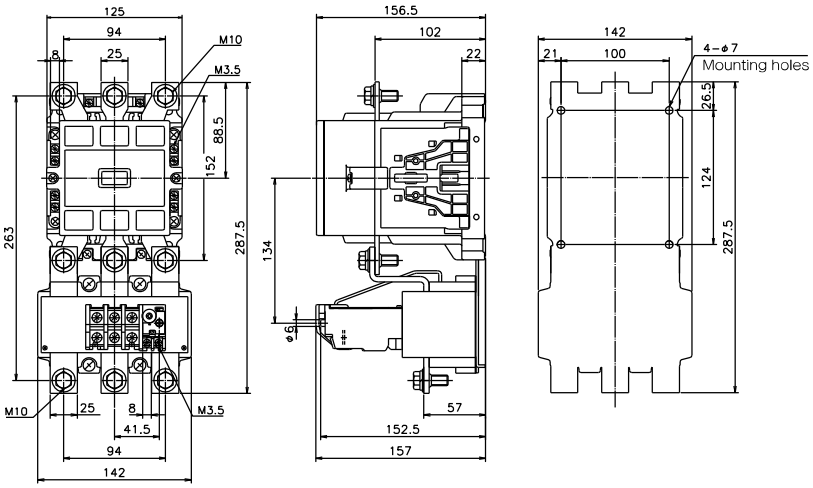

Contact configuration

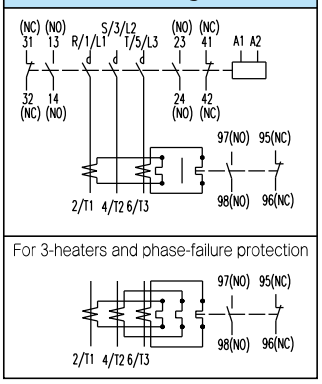

Weight 6.3kg

PAK-J

	20J	21J	26J	35J	50J	—
	3P1NO(1NC)	3P1NO1NC	3P2NO2NC	3P2NO2NC	3P2NO2NC	—
	32A		50A	60A	65A	—
	7.5kW/27A		10kW/35A	15kW/52A	18.5kW/65A	—
	11kW/22A		20kW/35A	26kW/45A	30kW/62A	—
	1.5kW/27A		2kW/35A	3kW/52A	—	—
	3kW/27A		4kW/35A	6kW/52A	—	—
	32A		50A	60A	65A	—
	TJ-18		TJ-35			—
		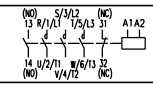	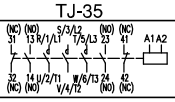			—
	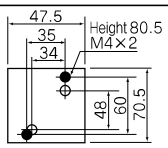	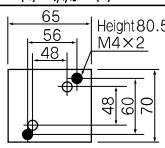	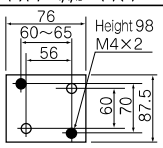			—

PAK-H

	18H	20H	25H	35H	50H	65H	80H	95H	100H	125H	150H	22
C	3P1NO1NC	3P2NO2NC	3P2NO2NC	3P2NO2NC	3P2NO2NC	3P2NO2NC	3P2NO2NC	3P2NO2NC	3P2NO2NC	3P2NO2NC	3P2NO2NC	3P2N
	28A	40A	45A	60A	75A	90A	110A	110A	150A	170A	220A	27
A	4kW/20A	5.5kW/25A	7.5kW/35A	11kW/50A	18.5kW/65A	22kW/80A	25kW/90A	27kW/110A	37kW/125A	45kW/150A	60kW/200A	80kW
A	7.5kW/17A	11kW/24A	15kW/32A	19kW/40A	30kW/62A	37kW/75A	45kW/90A	55kW/110A	55kW/110A	60kW/125A	75kW/150A	90kW
A	0.9kW/20A	1.2kW/25A	2.2kW/35A	3.7kW/50A	—	—	—	—	—	—	—	—
A	2.2kW/24A	2.2kW/24A	3.7kW/32A	5.5kW/46A	—	—	—	—	—	—	—	—
	28A	40A	45A	60A	75A	90A	110A	110A	150A	170A	220A	27
	T-18	T-35			TJ-50,T-50			TJ-50	TJ-125,T-125			
	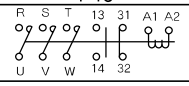	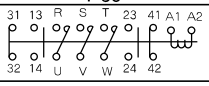			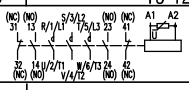							
	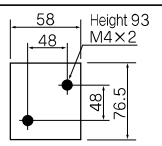	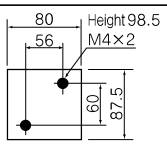			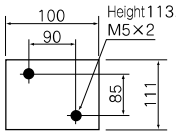				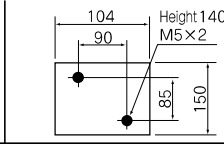		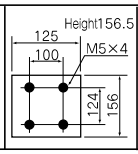	
	○(21J)	○										

PAK-U

	18U(4P)	18U(5P)	20U	25U	35U	50U	65U	80U	100U	125U	150U
	3P1NO(1NC)	3P1NO1NC	3P2NO2NC	3P2NO2NC	3P2NO2NC	3P2NO2NC	3P2NO2NC	3P2NO2NC	3P2NO2NC	3P2NO2NC	3P2NO2NC
	18A		20A	25A	35A	50A	65A	80A	100A	125A	150A
	4kW/20A		5.5kW/25A	7.5kW/35A	11kW/50A	—	—	—	—	—	—
	5.5kW/13A		7.5kW/17A	11kW/24A	15kW/32A	—	—	—	—	—	—
	—		—	—	—	—	—	—	—	—	—
	—		—	—	—	—	—	—	—	—	—
	18A		20A	25A	35A	50A	65A	80A	100A	125A	150A
	CR-10		CR-20		CR-35	CR-50				CR-125	T-125
2	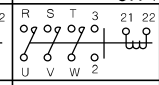	Same as PAK-10U(5P)	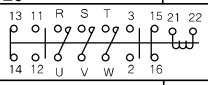			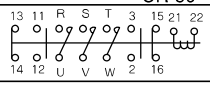					
	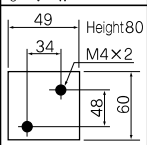	Same as PAK-10U(5P)	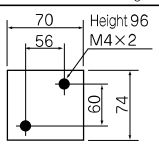		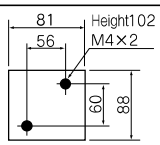	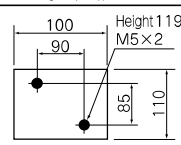			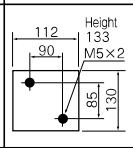	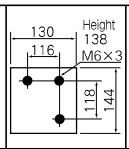	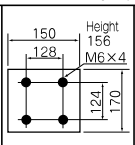
	○	○	○		○	○			○	×(Adaptor 25761-51-1)	×(Adaptor 25762-50-1)

PAK-B

	11B	18B	18B12	25B	25BS	35B	50B	75B	100B	150B
	3P1NO(1NC)	3P1NO(1NC)	3P2NO2NC	3P2NO2NC	3P2NO2NC					
	16A	25A		35A	50A		75A	100A	150A	200A
	—	—		—	—		—	—	—	—
	—	—		—	—		—	—	—	—
	—	—		—	—		—	—	—	—
	—	—		—	—		—	—	—	—
	16A	25A		35A	50A		75A	100A	150A	200A
	CR-K41(H)	CR-31(H)		CR-K11	CR-K11				CR-K21	
	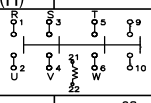		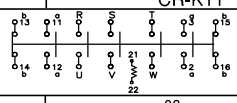						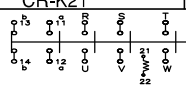	
	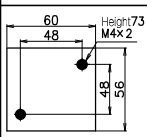	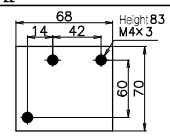	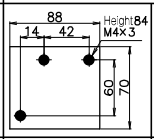	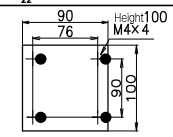	Same as PAK-25B	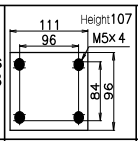	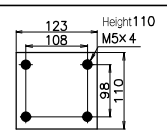	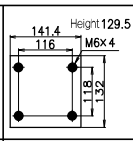	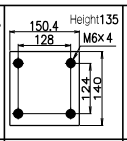	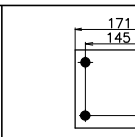
	×	○(21J)	○	×	×	×	×	×(Adaptor 25761-51-1) (125H)	×(Adaptor 25762-50-1) (150H)	×(Adaptor (220H

RSK-J

20J	21J	26J	35J	50J
3P1NO1NC×2	3P1NO2NC×2	3P2NO3NC×2	3P2NO3NC×2	3P2NO3NC×2
32A	32A	50A	60A	65A
7.5kW/27A	7.5kW/27A	10kW/35A	15kW/52A	18.5kW/65A
11kW/22A	11kW/22A	20kW/35A	26kW/45A	30kW/62A
11kW/18A	11kW/18A	20kW/28A	26kW/36A	30kW/45A
4kW	5.5kW	7.5kW	10kW	10kW
5.5kW	7.5kW	11kW	20kW	20kW
5.5kW	7.5kW	11kW	20kW	20kW
32A	32A	50A	60A	65A
TJ-18, T-18JA	TJ-18, T-18JA	TJ-35, T-35	TJ-35, T-35	TJ-35

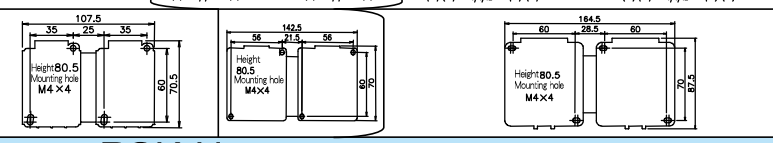

RSK-H

12H	18H		20H	25H	35H
P1NO1NC×2	3P1NO1NC×2		3P2NO2NC×2	3P2NO2NC×2	3P2NO2NC×2
26A	28A		40A	45A	60A
3.7kW/18A	4kW/20A		5.5kW/25A	7.5kW/35A	11kW/50A
5.5kW/13A	7.5kW/17A		11kW/24A	15kW/32A	19kW/40A
7kW/13A	9kW/17A		11kW/19A	15kW/26A	19kW/32A
2.2kW	2.5kW		3.7kW	4kW	5.5kW
3.7kW	4.5kW		5.5kW	7.5kW	11kW
3.7kW	4.5kW		5.5kW	7.5kW	11kW
26A	28A		40A	45A	60A
T-18	T-18		T-35	T-35	T-35

○	○		×(Adoptor 52196-54-1)	

RSK-U

18U	20U	25U	35U	50U
3P1NO1NC×2	3P2NO2NC×2	3P2NO2NC×2	3P2NO2NC×2	3P2NO2NC×2
18A	20A	25A	35A	50A
4kW/20A	5.5kW/25A	7.5kW/35A	11kW/50A	—
5.5kW/13A	7.5kW/17A	11kW/24A	15kW/32A	—
—	—	—	—	—
2.2kW	3.7kW	4kW	5.5kW	7.5kW
3kW	4kW	5.5kW	7.5kW	11kW
18A	20A	25A	35A	50A
CR-10	CR-20	CR-20	CR-35	CR-50

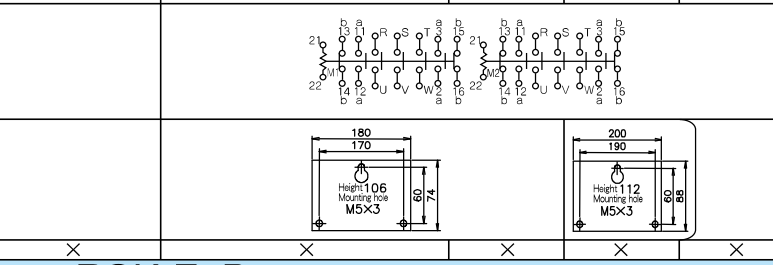

×	×	×	×	×

RCK-E, B

18B	18B-12	35B
3P1NO1NC×2	3P2NO2NC×2	3P2NO2NC×2
25A	25A	50A
—	—	—
—	—	—
3kW	3kW	7.5kW
3kW	3kW	11kW
25A	25A	50A
CR-K31H	CR-K31H	CR-K11

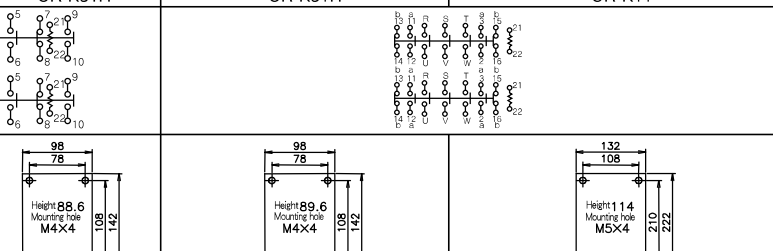

×	×	×

RSK-H

50H	65H	80H	95H	100H	1
3P2NO2NC×2	3P2NO2NC×2	3P2NO2NC×2	3P2NO2NC×2	3P2NO2NC×2	3P2NO
75A	90A	110A	110A	150A	1
18.5kW/65A	22kW/80A	25kW/90A	27kW/110A	37kW/125A	45kW
30kW/62A	37kW/75A	45kW/90A	55kW/110A	55kW/110A	60kW
30kW/45A	37kW/60A	45kW/72A	55kW/90A	55kW/90A	70kW
7.5kW	11kW	15kW	19kW	19kW	2
15kW	22kW	30kW	37kW	37kW	4
15kW	22kW	30kW	37kW	37kW	4
75A	90A	110A	110A	150A	1
TJ-50, T-50	TJ-50, T-50	TJ-50, T-50	TJ-50	TJ-125, T-125	TJ-12

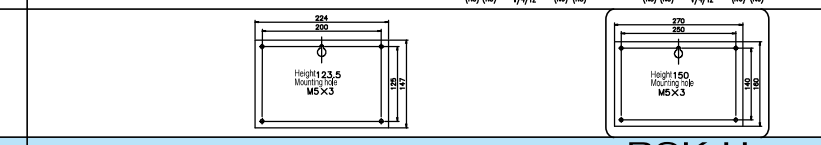

RSK-U

50U	65U	80U	100U	1
3P2NO2NC×2	3P2NO2NC×2	3P2NO2NC×2	3P2NO2NC×2	3P2NO
50A	65A	80A	100A	1
—	—	—	—	
—	—	—	—	
—	—	—	—	
7.5kW	11kW	11kW	15kW	1
11kW (380-550V)	15kW (380-550V)	15kW (380-550V)	22kW (380-550V)	3 (380
50A	65A	80A	100A	1
CR-50	CR-50	CR-50	CR-50	CR

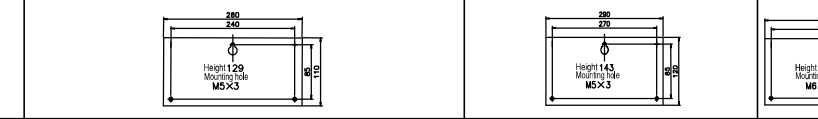

×	×	×	×	

RSK-B

35B	50B	75B	1
3P2NO2NC	3P2NO2NC	3P2NO2NC	3P2
50A	75A	100A	1
—	—	—	
—	—	—	
7.5kW	11kW	15kW	1
11kW (380-550V)	15kW (380-550V)	19kW (380-550V)	25kW (
50A	75A	100A	1
CR-K11	CR-K11	CR-K11	CR

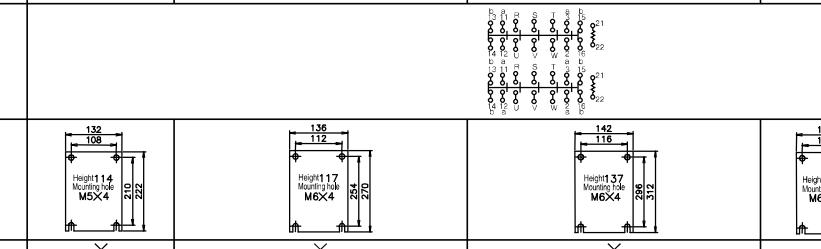

×	×	×	

CLK-J

	20J	26J	35J	50J	65H
	3P1NO1NC (2NO,2NC)	3P1NO1NC (2NO,2NC)	3P1NO1NC (2NO2NC)	3P2NO2NC	3P2NO2NC
	26A	30A	45A	60A	75A
	4kW/20A	5.5kW/26A	7.5kW/35A	11kW/50A	15kW/65A
	5.5kW/13A	7.5kW/18A	11kW/26A	19kW/40A	30kW/65A
	0.9kW/20A	1.2kW/26A	1.6kW/35A	2.3kW/50A	—
	1.8kW/20A	2.4kW/26A	3.3kW/35A	4.7kW/50A	—
	26A	30A	45A	60A	75A
	20A	28A	38A	60A	75A
	TJ-18	TJ-18	TJ-35	TJ-35	TJ-50, T-50

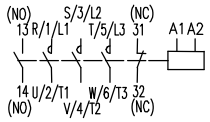

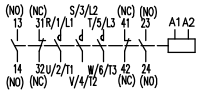

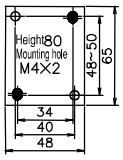

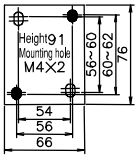

K-H

	20H	25H	35H	50H	65U
	3P1NO1NC (2NO)	3P1NO1NC (2NO)	3P2NO2NC	3P2NO2NC	3P2NO2NC
	26A	28A	40A	60A	65A
	4kW/20A	5.5kW/25A	7.5kW/35A	11kW/50A	15kW/65A
	5.5kW/13A	7.5kW/17A	11kW/25A	19kW/40A	26kW/50A
	0.8kW	1.1kW	1.2kW	3.7kW	3.7kW
	1.6kW	2.2kW	2.2kW	5.5kW	—
	26A	28A	40A	60A	65A (Up to 550V)
	T-18	T-18	T-35	T-35	CR-50

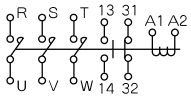

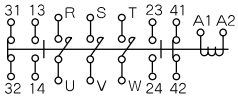

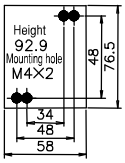

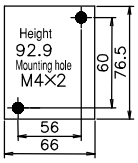

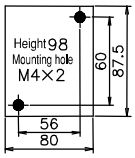

○(34×48)					×(Adoptor 25942-100-21)	○	○	○

CLK-E, U

	16U01	20U01	20U	18E	20E	24E	25U	35U	50U
	3P1NO1NC	3P1NO1NC	3P1NO	3P1NO (1NC)	3P1NO (1NC)	3P1NO (1NC)	3P2NO2NC	3P2NO2NC	3P2NO2NC
	16A	20A	20A	20A	22A	24A	25A	35A	50A
	2.5kW/16A	4kW/20A	4kW/20A	3.7kW/16A	4kW/18A	5.5kW/22A	5.5kW/25A	7.5kW/35A	11kW/50A
	3.7kW/8A	4kW/10A	4kW/10A	3.7kW	4kW	5.5kW	7.5kW/17A	7.5kW/17A	11kW/25A
	0.4kW	0.75kW	0.75kW	0.75kW	0.9kW	1.1kW	1.1kW	1.5kW	2.2kW
	1.1kW	1.8kW	1.8kW	1.5kW	1.8kW	2.2kW	2.2kW	3.7kW	5.5kW
	16A	20A	20A	24A	22A	24A	25A	35A	50A
	CR-10, T-15H	CR-10, T-15H	CR-10, T-15H	CR-10, T-15H	CR-10,T-15H	CR-20	CR-20	CR-20	CR-20, CR-35

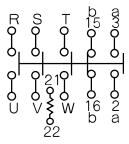

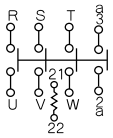

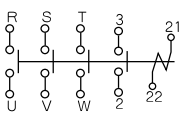

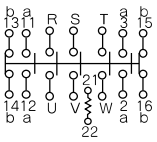

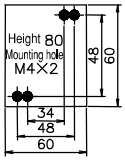

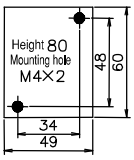

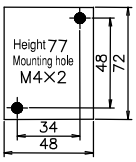

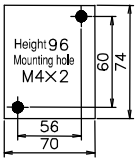

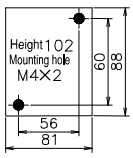

○	○(34×48)	○(34×48)	○	○	○	○	○	○

Index

Model	Description	Page
B		
BASE FOR TJ-18N for □	Base for TJ-18N	95
C		
C-□	Terminal protection cover	92
CLK-□	Magnetic Contactors	105
CLK-□GT (C)	Magnetic Starters with phase-failure protection thermal overload relay	105
CLK-□T (C)	Magnetic Starters with 2-heaters thermal overload relays	105
CLK-□T-3 (C)	Magnetic Starters with 3-heaters thermal overload relays	105
CONNECTING BAR KIT for □	Connecting bar kit	95
D		
D-5A	DIN rail mounting adaptor	94
G		
GT (J) -□	Phase-failure protection thermal overload relay	75
H		
HAU-□	Auxiliary contact unit	87
HL-B	No-loss latch unit	88
M		
MAIN CONTACT SPRING for □	Main contact spring	95
ML-□	Mechanical interlock unit set	95
P		
PAK-□H	Magnetic contactor without enclosure	3 ~ 44
PAK-□HB	Magnetic contactor with enclosure	
PAK-□HGM (C)	Magnetic starters with phase-failure protection thermal overload relays with enclosure	
PAK-□HGT (C)	Magnetic starters with phase-failure protection thermal overload relays without enclosure	
PAK-□HGT-SL2 (C)	Magnetic starters with slow-trip themal overload relays without enclosure	
PAK-□HM (C)	Magnetic starter with enclosure	
PAK-□HM-3 (C)	Magnetic starters with 3-heaters themal overload relays with enclosure	
PAK-□HT (C)	Magnetic starter without enclosure	
PAK-□HT-SL2 (C)	Magnetic starters with slow-trip themal overload relays without enclosure	
PAK-□HT-3 (C)	Magnetic starters with 3-heaters themal overload relays without enclosure	
PAK-□J (C)	Magnetic contactor without enclosure	
PAK-□JB (C)	Magnetic contactor with enclosure	
PAK-□JGM (C)	Magnetic starters with phase-failure protection thermal overload relays with enclosure	
PAK-□JGT (C)	Magnetic starters with phase-failure protection thermal overload relays without enclosure	
PAK-□JGT-SL2 (C)	Magnetic starters with slow-trip themal overload relays without enclosure	
PAK-□JL	Mechanical latch magnetic contactors	
PAK-□JM (C)	Magnetic starter with enclosure	
PAK-□JM-3 (C)	Magnetic starters with 3-heaters themal overload relays with enclosure	
PAK-□JT (C)	Magnetic starter without enclosure	
PAK-□JT-SL2 (C)	Magnetic starters with slow-trip themal overload relays without enclosure	
PAK-□JT-3 (C)	Magnetic starters with 3-heaters themal overload relays without enclosure	
PAK-□8JS	Magnetic relays	67
PBP-□	Push button swiches (Resin)	103
PBU-□	Push button swiches (Steel)	104

Index

Model	Description	Page
R		
RSK-□H	Reversing magnetic contactor without enclosure	3 ~ 28
RSK-□HB	Reversing magnetic contactor with enclosure	
RSK-□HGM (C)	Reversing magnetic starters with phase-failure protection thermal overload relays with enclosure	
RSK-□HGT (C)	Reversing magnetic starters with phase-failure protection thermal overload relays without enclosure	
RSK-□HM (C)	Reversing magnetic starter with enclosure	
RSK-□HM-3 (C)	Reversing magnetic starters with 3-heaters themal overload relays with enclosure	
RSK-□HT (C)	Reversing magnetic starter without enclosure	
RSK-□HT-3 (C)	Reversing magnetic starters with 3-heaters themal overload relays without enclosure	
RSK-□J	Reversing magnetic contactor without enclosure	
RSK-□JB	Reversing magnetic contactor with enclosure	
RSK-□JGM (C)	Reversing magnetic starters with phase-failure protection thermal overload relays with enclosure	
RSK-□JGT (C)	Reversing magnetic starters with phase-failure protection thermal overload relays without enclosure	45 ~ 58
RSK-□JL	Reversing mechanical latch magnetic contactors	
RSK-□JM (C)	Reversing magnetic starter with enclosure	
RSK-□JM-3 (C)	Reversing magnetic starters with 3-heaters themal overload relays with enclosure	
RSK-□JT (C)	Reversing magnetic starter without enclosure	
RSK-□JT-3 (C)	Reversing magnetic starters with 3-heaters themal overload relays without enclosure	
S		
SA-□	Coil surge absorption unit	93
SDH-□	2-contactor type Star-Delta starter	96
SDH3-□	3-contactor type Star-Delta starter	96
SPARE COIL for □	Spare coil	95
T		
TC-□	Terminal cover	89
T (J) -□	Standard type thermal overload relay	75
TJ-□-3	3-heaters type thermal overload relay	75

Magnetic Contactors
and
Thermal overload relays

PAK・RSK Series
CLK Series

Warranty

■Warranty period
One year after arrival.

■Warranty range
If the products concerned have defects in material and workmanship under normal operating conditions within the warranty period, they shall be repaired at no charge. However, the following cases shall be excluded from no-charge repair.
①Defects caused by users' carelessness, acts of God and natural disasters.
②Failures caused by modifications and repair not carried out by us or personnel entrusted by us.
This warranty shall cover delivered products, but secondary damage inducing failure of delivered products cannot be compensated.

※Specifications subject to change without notice.

Togami Electric Mfg.Co.,Ltd.

Global Department（Tokyo Office）

Togami Bldg. 4-1-13 Aobadai, Meguro ward,
Tokyo 153-0042, JAPAN
TEL +81-3-3465-5324
FAX +81-3-5738-3622

CO227e 宣145-004 2019.E.AJY.S